KCU105 EVALUATION PLATFORM HW-U1-KCU105 (KU040-FFVA1156)

DISCLAIMER:
XILINX IS DISCLOSING THIS USER GUIDE, MANUAL, RELEASE NOTE, SCHEMATIC, AND/OR SPECIFICATION (THE “DOCUMENTATION”) TO YOU SOLELY FOR USE IN THE DEVELOPMENT OF DESIGNS TO OPERATE WITH XILINX HARDWARE DEVICES. YOU MAY NOT REPRODUCE, DISTRIBUTE, REPUBLISH, DOWNLOAD, DISPLAY, POST, OR TRANSMIT THE DOCUMENTATION IN ANY FORM OR BY ANY MEANS INCLUDING, BUT NOT LIMITED TO, ELECTRONIC, MECHANICAL, PHOTOCOPYING, RECORDING, OR OTHERWISE, WITHOUT THE PRIOR WRITTEN CONSENT OF XILINX.
XILINX EXPRESSLY DISCLAIMS ANY LIABILITY ARISING OUT OF YOUR USE OF THE DOCUMENTATION. XILINX RESERVES THE RIGHT, AT ITS SOLE DISCRETION, TO CHANGE THE DOCUMENTATION WITHOUT NOTICE AT ANY TIME. XILINX ASSUMES NO OBLIGATION TO CORRECT ANY ERRORS CONTAINED IN THE DOCUMENTATION, OR TO ADVISE YOU OF ANY CORRECTIONS OR UPDATES. XILINX EXPRESSLY DISCLAIMS ANY LIABILITY IN CONNECTION WITH TECHNICAL SUPPORT OR ASSISTANCE THAT MAY BE PROVIDED TO YOU IN CONNECTION WITH THE DOCUMENTATION.
THE DOCUMENTATION IS DISCLOSED TO YOU “AS-IS” WITH NO WARRANTY OF ANY KIND. XILINX MAKES NO OTHER WARRANTIES, WHETHER EXPRESS, IMPLIED, OR STATUTORY, REGARDING THE DOCUMENTATION, INCLUDING ANY WARRANTIES OF MERCHANTABILITY, FITNESS FOR A PARTICULAR PURPOSE, OR NONINFRINGEMENT OF THIRD-PARTY RIGHTS. IN NO EVENT WILL XILINX BE LIABLE FOR ANY CONSEQUENTIAL, INDIRECT, EXEMPLARY, SPECIAL, OR INCIDENTAL DAMAGES, INCLUDING ANY LOSS OF DATA OR LOST PROFITS, ARISING FROM YOUR USE OF THE DOCUMENTATION.

THE XILINX HARDWARE, FPGA AND CPLD DEVICES REFERRED TO HEREIN ("PRODUCTS") ARE SUBJECT TO THE TERMS AND CONDITIONS OF THE XILINX LIMITED WARRANTY WHICH CAN BE VIEWED AT http://www.xilinx.com/warranty.htm. THIS LIMITED WARRANTY DOES NOT EXTEND TO ANY USE OF PRODUCTS IN AN APPLICATION OR ENVIRONMENT THAT IS NOT WITHIN THE SPECIFICATIONS STATED ON THE XILINX DATA SHEET.

ALL SPECIFICATIONS ARE SUBJECT TO CHANGE WITHOUT NOTICE.

PRODUCTS ARE NOT DESIGNED OR INTENDED TO BE FAIL-SAFE, OR FOR USE IN ANY APPLICATION REQUIRING FAIL-SAFE PERFORMANCE, SUCH AS LIFE-SUPPORT OR SAFETY DEVICES OR SYSTEMS, OR ANY OTHER APPLICATION THAT INVOKES THE POTENTIAL RISKS OF DEATH, PERSONAL INJURY OR PROPERTY OR ENVIRONMENTAL DAMAGE

("CRITICAL APPLICATIONS"). USE OF PRODUCTS IN CRITICAL APPLICATIONS IS AT THE SOLE RISK OF CUSTOMER, SUBJECT TO APPLICABLE LAWS AND REGULATIONS. ALL SPECIFICATIONS ARE SUBJECT TO CHANGE WITHOUT NOTICE.

XILINX

TITLE: Title Page SCHEM, ROHS COMPLIANT HW-U1-KCU105_REV1_1	ASSY P/N: 0431811 PCB P/N: 1280723 SCH P/N: 0381556 TEST P/N: TSS0165
DATE: 05/20/2015:19:32	VER: 1.1
SHEET SIZE: B	REV: 02
SHEET 1 OF 66	DRAWN BY: BF

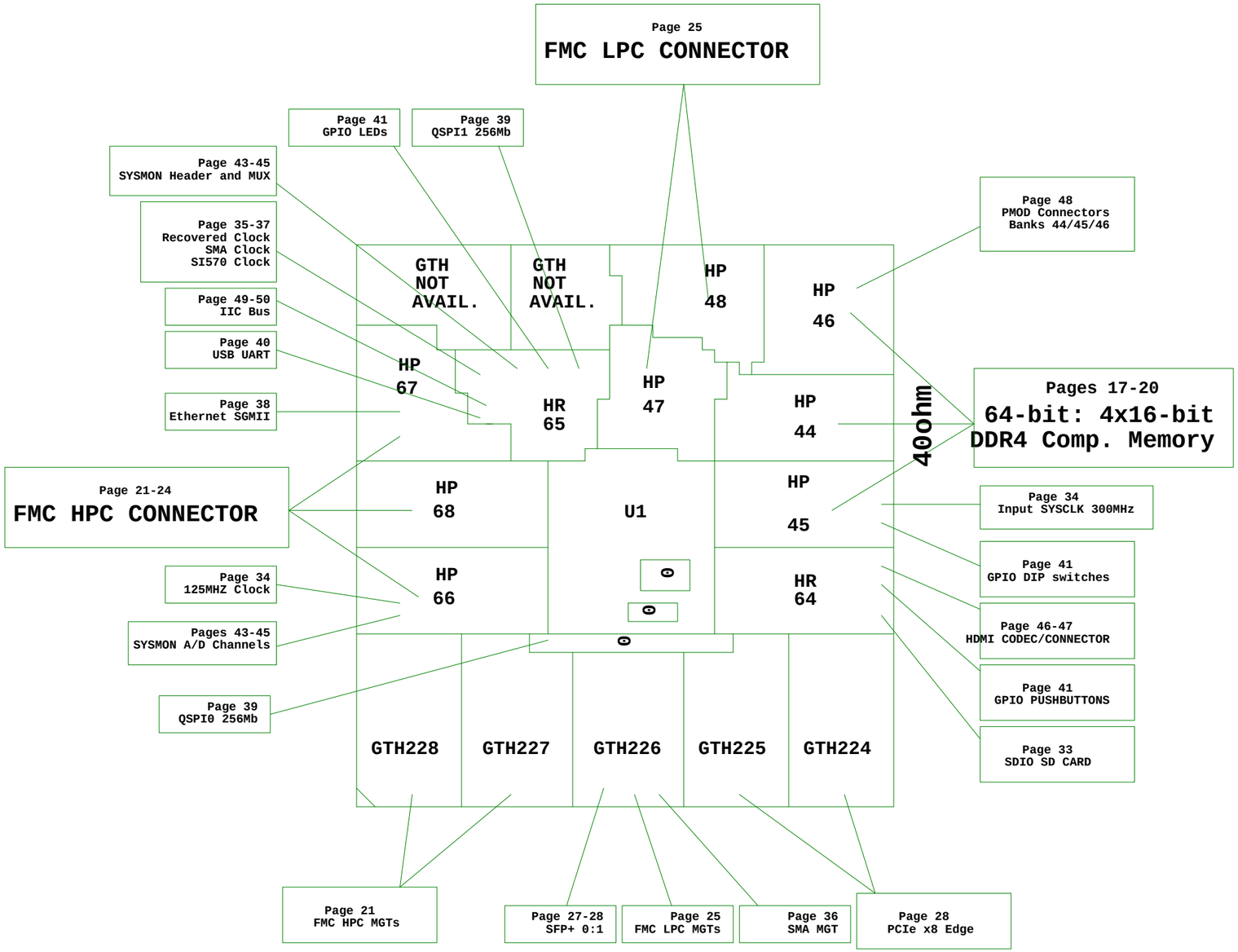

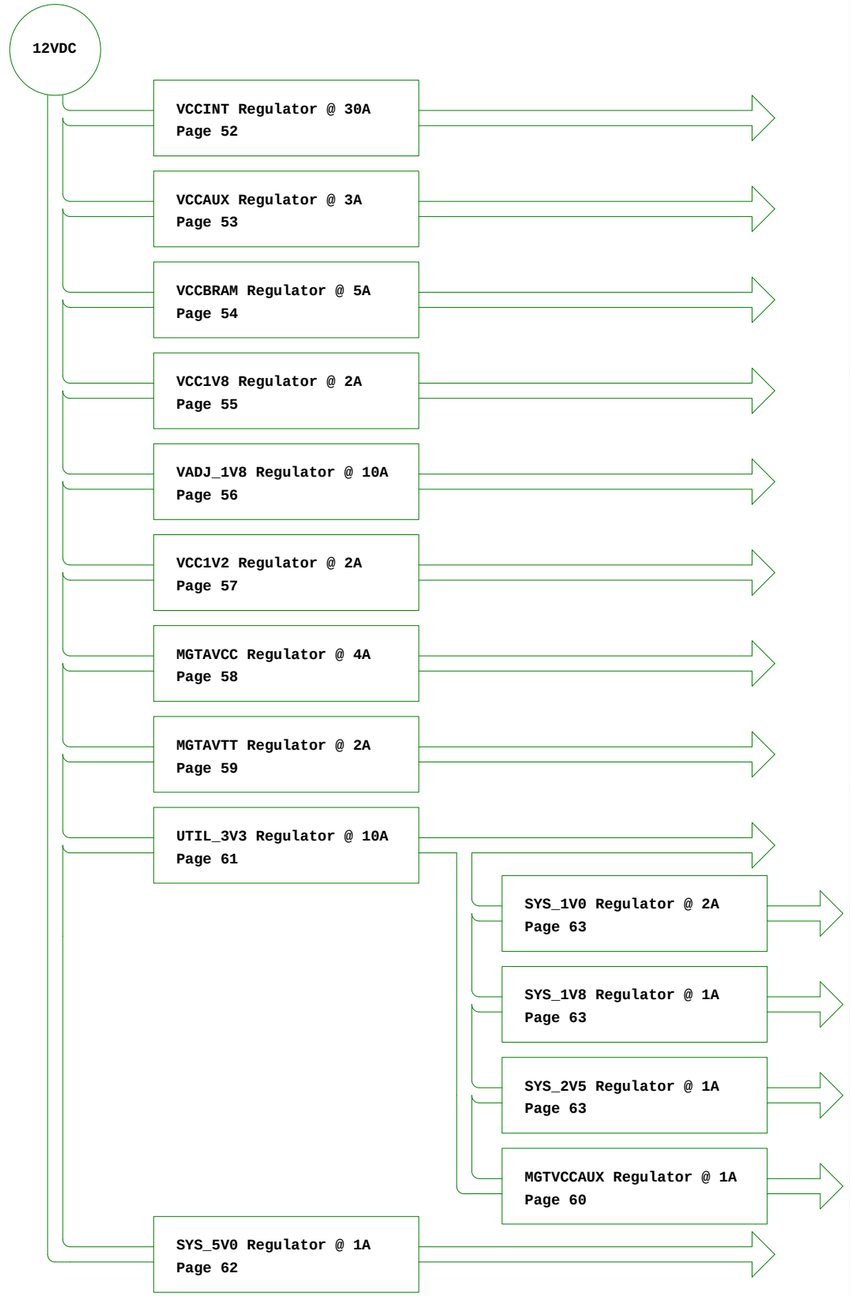

SMT, 14-pin JTAG Buffers

Page 16

System Controller IIC, JTAG, SD

Page 29-33

BANK#	PAGE#	BANK#	PAGE#
BANK 0	3	BANK 66	8
BANK 44	4	BANK 67	8
BANK 45	4	BANK 68	9
BANK 46	5	MGT225-228	10
BANK 47	6		
BANK 48	6		
BANK 64	7	PWR/GND BANKS	11-13
BANK 65	7	PWR CONNECTORS	50-51

MECHANICALS

Page 66

XILINX

TITLE: Block Diagram
SCHEM, ROHS COMPLIANT
HW-U1-KCU105_REV1_1

ASSY P/N: 0431811
PCB P/N: 1280723
SCH P/N: 0381556
TEST P/N: TSS0165

DATE: 05/20/2015:19:32 | VER: 1.1

SHEET SIZE: B | REV: 02

SHEET 2 OF 66 | DRAWN BY: BF

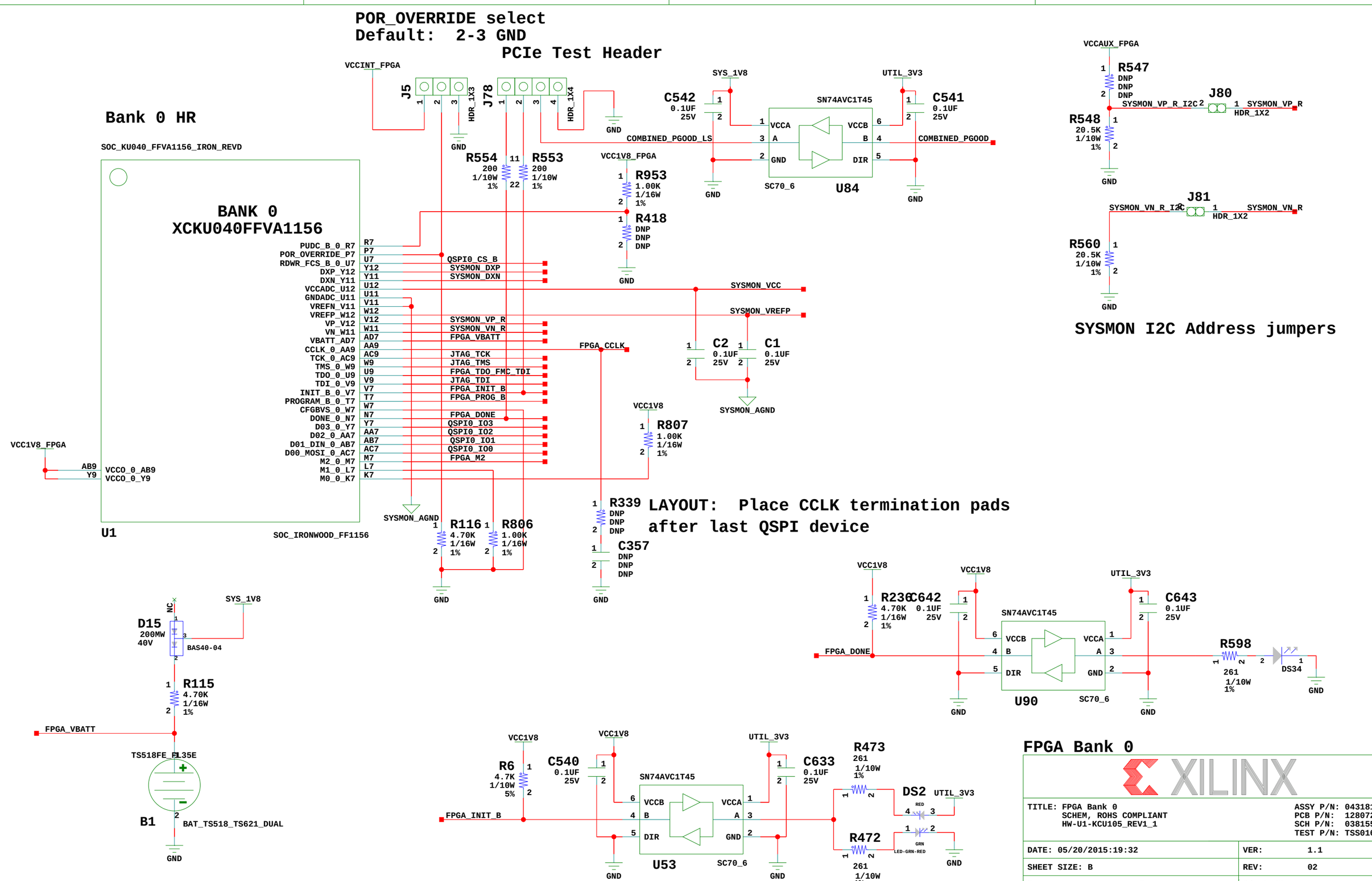

FPGA Bank 0

XILINX

TITLE: FPGA Bank 0 SCHEM, ROHS COMPLIANT HW-U1-KCU105_REV1_1	ASSY P/N: 0431811 PCB P/N: 1280723 SCH P/N: 0381556 TEST P/N: TSS0165
DATE: 05/20/2015:19:32	VER: 1.1
SHEET SIZE: B	REV: 02
SHEET 3 OF 66	DRAWN BY: BF

Layout: Place resistor and capacitor for VREF
Underneath the FPGA via array
right next to the via

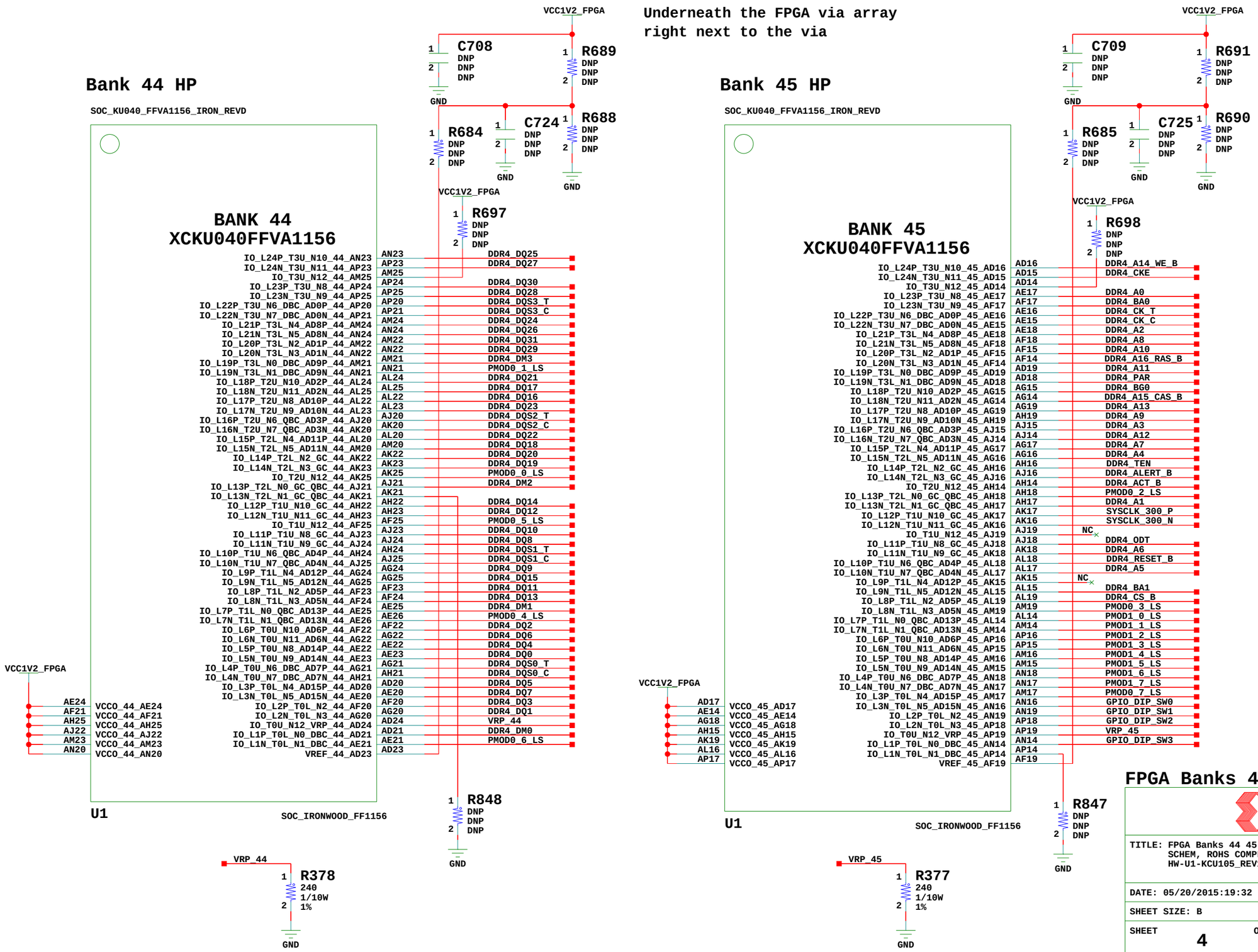

Bank 46 HP

SOC_KU040_FFVA1156_IRON_REVD

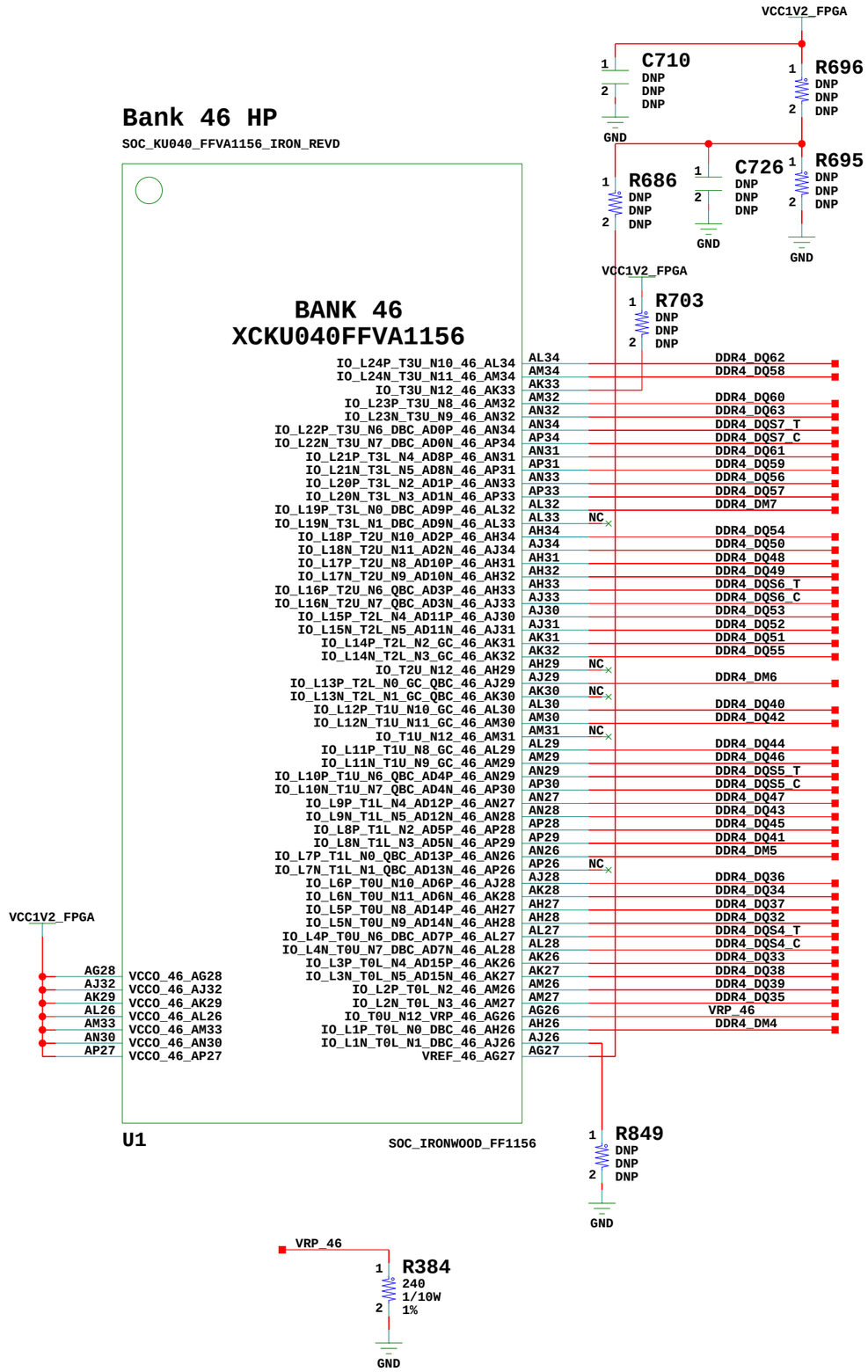

Layout: Place resistor and capacitor for VREF
Underneath the FPGA via array
right next to the via

FPGA Bank 46

XILINX

TITLE: FPGA Bank 46 SCHEM, ROHS COMPLIANT HW-U1-KCU105_REV1_1	ASSY P/N: 0431811 PCB P/N: 1280723 SCH P/N: 0381556 TEST P/N: TSS0165
DATE: 05/20/2015:19:32	VER: 1.1
SHEET SIZE: B	REV: 02
SHEET 5 OF 66	DRAWN BY: BF

Layout: Place resistor and capacitor for VREF
Underneath the FPGA via array
right next to the via

Bank 47 HP

SOC_KU040_FFVA1156_IRON_REVD

FMC_LPC_VREF_A_M2C

R794 (1–2): DNP, DNP, DNP

C854 (1–2): DNP, DNP, DNP

GND

VADJ_1V8_FPGA

R699 (1–2): DNP, DNP, DNP

BANK 47
XCKU040FFVA1156

Pin	Signal	Net
V26	IO_L24P_T3U_N10_47_V26	FMC_LPC_LA09_P
W26	IO_L24N_T3U_N11_47_W26	FMC_LPC_LA09_N
U29	IO_T3U_N12_47_U29	
V29	IO_L23P_T3U_N8_47_V29	FMC_LPC_LA06_P
W29	IO_L23N_T3U_N9_47_W29	FMC_LPC_LA06_N
U26	IO_L22P_T3U_N6_DBC_AD0P_47_U26	FMC_LPC_LA04_P
U27	IO_L22N_T3U_N7_DBC_AD0N_47_U27	FMC_LPC_LA04_N
W28	IO_L21P_T3L_N4_AD8P_47_W28	FMC_LPC_LA03_P
Y28	IO_L21N_T3L_N5_AD8N_47_Y28	FMC_LPC_LA03_N
U24	IO_L20P_T3L_N2_AD1P_47_U24	FMC_LPC_LA08_P
U25	IO_L20N_T3L_N3_AD1N_47_U25	FMC_LPC_LA08_N
V27	IO_L19P_T3L_N0_DBC_AD9P_47_V27	FMC_LPC_LA05_P
V28	IO_L19N_T3L_N1_DBC_AD9N_47_V28	FMC_LPC_LA05_N
V21	IO_L18P_T2U_N10_AD2P_47_V21	FMC_LPC_LA11_P
W21	IO_L18N_T2U_N11_AD2N_47_W21	FMC_LPC_LA11_N
T22	IO_L17P_T2U_N8_AD10P_47_T22	FMC_LPC_LA10_P
T23	IO_L17N_T2U_N9_AD10N_47_T23	FMC_LPC_LA10_N
V22	IO_L16P_T2U_N6_QBC_AD3P_47_V22	FMC_LPC_LA07_P
V23	IO_L16N_T2U_N7_QBC_AD3N_47_V23	FMC_LPC_LA07_N
U21	IO_L15P_T2L_N4_AD11P_47_U21	FMC_LPC_LA14_P
U22	IO_L15N_T2L_N5_AD11N_47_U22	FMC_LPC_LA14_N
W25	IO_L14P_T2L_N2_GC_47_W25	FMC_LPC_LA01_CC_P
Y25	IO_L14N_T2L_N3_GC_47_Y25	FMC_LPC_LA01_CC_N
Y21	IO_T2U_N12_47_Y21	ROTARY_INCA
W23	IO_L13P_T2L_N0_GC_QBC_47_W23	FMC_LPC_LA00_CC_P
W24	IO_L13N_T2L_N1_GC_QBC_47_W24	FMC_LPC_LA00_CC_N
AA24	IO_L12P_T1U_N10_GC_47_AA24	FMC_LPC_CLK0_M2C_P
AA25	IO_L12N_T1U_N11_GC_47_AA25	FMC_LPC_CLK0_M2C_N
Y22	IO_T1U_N12_47_Y22	NC
Y23	IO_L11P_T1U_N8_GC_47_Y23	NC
AA23	IO_L11N_T1U_N9_GC_47_AA23	NC
AB21	IO_L10P_T1U_N6_QBC_AD4P_47_AB21	FMC_LPC_LA16_P
AC21	IO_L10N_T1U_N7_QBC_AD4N_47_AC21	FMC_LPC_LA16_N
AA20	IO_L9P_T1L_N4_AD12P_47_AA20	FMC_LPC_LA13_P
AB20	IO_L9N_T1L_N5_AD12N_47_AB20	FMC_LPC_LA13_N
AC22	IO_L8P_T1L_N2_AD5P_47_AC22	FMC_LPC_LA12_P
AC23	IO_L8N_T1L_N3_AD5N_47_AC23	FMC_LPC_LA12_N
AA22	IO_L7P_T1L_N0_QBC_AD13P_47_AA22	FMC_LPC_LA02_P
AB22	IO_L7N_T1L_N1_QBC_AD13N_47_AB22	FMC_LPC_LA02_N
AB25	IO_L6P_T0U_N10_AD6P_47_AB25	FMC_LPC_LA15_P
AB26	IO_L6N_T0U_N11_AD6N_47_AB26	FMC_LPC_LA15_N
AA27	IO_L5P_T0U_N8_AD14P_47_AA27	NC
AB27	IO_L5N_T0U_N9_AD14N_47_AB27	NC
AC26	IO_L4P_T0U_N6_DBC_AD7P_47_AC26	NC
AC27	IO_L4N_T0U_N7_DBC_AD7N_47_AC27	NC
AB24	IO_L3P_T0L_N4_AD15P_47_AB24	NC
AC24	IO_L3N_T0L_N5_AD15N_47_AC24	NC
AD25	IO_L2P_T0L_N2_47_AD25	NC
AD26	IO_L2N_T0L_N3_47_AD26	
AA28	IO_T0U_N12_VRP_47_AA28	ROTARY_INCB
Y26	IO_L1P_T0L_N0_DBC_47_Y26	VRP_47
Y27	IO_L1N_T0L_N1_DBC_47_Y27	NC
V24	VREF_47_V24	NC

VADJ_1V8_FPGA

Pin	Net
T21	VCCO_47_T21
U28	VCCO_47_U28
V25	VCCO_47_V25
W22	VCCO_47_W22
AA26	VCCO_47_AA26
AB23	VCCO_47_AB23
AC20	VCCO_47_AC20

U1

SOC_IRONWOOD_FF1156

VRP_47

R379: 240, 1/10W, 1%

GND

Bank 48 HP

SOC_KU040_FFVA1156_IRON_REVD

FMC_LPC_VREF_A_M2C

R795 (1–2): DNP, DNP, DNP

C855 (1–2): DNP, DNP, DNP

GND

VADJ_1V8_FPGA

R583 (1–2): DNP, DNP, DNP

BANK 48
XCKU040FFVA1156

Pin	Signal	Net
V31	IO_L24P_T3U_N10_48_V31	FMC_LPC_LA28_P
W31	IO_L24N_T3U_N11_48_W31	FMC_LPC_LA28_N
V32	IO_T3U_N12_48_V32	
U34	IO_L23P_T3U_N8_48_U34	FMC_LPC_LA29_P
V34	IO_L23N_T3U_N9_48_V34	FMC_LPC_LA29_N
Y31	IO_L22P_T3U_N6_DBC_AD0P_48_Y31	FMC_LPC_LA30_P
Y32	IO_L22N_T3U_N7_DBC_AD0N_48_Y32	FMC_LPC_LA30_N
V33	IO_L21P_T3L_N4_AD8P_48_V33	FMC_LPC_LA31_P
W34	IO_L21N_T3L_N5_AD8N_48_W34	FMC_LPC_LA31_N
W30	IO_L20P_T3L_N2_AD1P_48_W30	FMC_LPC_LA32_P
Y30	IO_L20N_T3L_N3_AD1N_48_Y30	FMC_LPC_LA32_N
W33	IO_L19P_T3L_N0_DBC_AD9P_48_W33	FMC_LPC_LA33_P
Y33	IO_L19N_T3L_N1_DBC_AD9N_48_Y33	FMC_LPC_LA33_N
AC33	IO_L18P_T2U_N10_AD2P_48_AC33	FMC_LPC_LA21_P
AD33	IO_L18N_T2U_N11_AD2N_48_AD33	FMC_LPC_LA21_N
AA34	IO_L17P_T2U_N8_AD10P_48_AA34	FMC_LPC_LA20_P
AB34	IO_L17N_T2U_N9_AD10N_48_AB34	FMC_LPC_LA20_N
AA29	IO_L16P_T2U_N6_QBC_AD3P_48_AA29	FMC_LPC_LA19_P
AB29	IO_L16N_T2U_N7_QBC_AD3N_48_AB29	FMC_LPC_LA19_N
AC34	IO_L15P_T2L_N4_AD11P_48_AC34	FMC_LPC_LA22_P
AD34	IO_L15N_T2L_N5_AD11N_48_AD34	FMC_LPC_LA22_N
AB30	IO_L14P_T2L_N2_GC_48_AB30	FMC_LPC_LA18_CC_P
AB31	IO_L14N_T2L_N3_GC_48_AB31	FMC_LPC_LA18_CC_N
AA33	IO_T2U_N12_48_AA33	NC
AA32	IO_L13P_T2L_N0_GC_QBC_48_AA32	FMC_LPC_LA17_CC_P
AB32	IO_L13N_T2L_N1_GC_QBC_48_AB32	FMC_LPC_LA17_CC_N
AC31	IO_L12P_T1U_N10_GC_48_AC31	FMC_LPC_CLK1_M2C_P
AC32	IO_L12N_T1U_N11_GC_48_AC32	FMC_LPC_CLK1_M2C_N
AE31	IO_T1U_N12_48_AE31	NC
AD30	IO_L11P_T1U_N8_GC_48_AD30	FMC_LPC_LA23_P
AD31	IO_L11N_T1U_N9_GC_48_AD31	FMC_LPC_LA23_N
AE33	IO_L10P_T1U_N6_QBC_AD4P_48_AE33	FMC_LPC_LA25_P
AF34	IO_L10N_T1U_N7_QBC_AD4N_48_AF34	FMC_LPC_LA25_N
AE32	IO_L9P_T1L_N4_AD12P_48_AE32	FMC_LPC_LA24_P
AF32	IO_L9N_T1L_N5_AD12N_48_AF32	FMC_LPC_LA24_N
AF33	IO_L8P_T1L_N2_AD5P_48_AF33	FMC_LPC_LA26_P
AG34	IO_L8N_T1L_N3_AD5N_48_AG34	FMC_LPC_LA26_N
AG31	IO_L7P_T1L_N0_QBC_AD13P_48_AG31	FMC_LPC_LA27_P
AG32	IO_L7N_T1L_N1_QBC_AD13N_48_AG32	FMC_LPC_LA27_N
AF30	IO_L6P_T0U_N10_AD6P_48_AF30	NC
AG30	IO_L6N_T0U_N11_AD6N_48_AG30	NC
AD29	IO_L5P_T0U_N8_AD14P_48_AD29	NC
AE30	IO_L5N_T0U_N9_AD14N_48_AE30	NC
AF29	IO_L4P_T0U_N6_DBC_AD7P_48_AF29	NC
AG29	IO_L4N_T0U_N7_DBC_AD7N_48_AG29	NC
AC28	IO_L3P_T0L_N4_AD15P_48_AC28	NC
AD28	IO_L3N_T0L_N5_AD15N_48_AD28	NC
AE28	IO_L2P_T0L_N2_48_AE28	NC
AF28	IO_L2N_T0L_N3_48_AF28	ROTARY_PUSH
AC29	IO_T0U_N12_VRP_48_AC29	VRP_48
AE27	IO_L1P_T0L_N0_DBC_48_AE27	NC
AF27	IO_L1N_T0L_N1_DBC_48_AF27	NC
AA30	VREF_48_AA30	

VADJ_1V8_FPGA

Pin	Net
W32	VCCO_48_W32
Y29	VCCO_48_Y29
AB33	VCCO_48_AB33
AC30	VCCO_48_AC30
AD27	VCCO_48_AD27
AE34	VCCO_48_AE34
AF31	VCCO_48_AF31

U1

SOC_IRONWOOD_FF1156

VRP_48

R380: 240, 1/10W, 1%

GND

FPGA Banks 47 48

XILINX

TITLE: FPGA Banks 47 48 SCHEM, ROHS COMPLIANT HW-U1-KCU105_REV1_1	ASSY P/N: 0431811 PCB P/N: 1280723 SCH P/N: 0381556 TEST P/N: TSS0165
DATE: 05/20/2015:19:32	VER: 1.1
SHEET SIZE: B	REV: 02
SHEET 6 OF 66	DRAWN BY: BF

Bank 64 HR

SOC_KU040_FFVA1156_IRON_REVD

BANK 64
XCKU040FFVA1156

IO_L24P_T3U_N10_64_AK8	AK8	HDMI_R_D17
IO_L24N_T3U_N11_64_AL8	AL8	SFP0_TX_DISABLE
IO_T3U_N12_64_AM9	AM9	SFP1_LOS_LS
IO_L23P_T3U_N8_64_AJ9	AJ9	SM_FAN_PWM
IO_L23N_T3U_N9_64_AJ8	AJ8	SM_FAN_TACH
IO_L22P_T3U_N6_DBC_AD0P_64_AN8	AN8	CPU_RESET
IO_L22N_T3U_N7_DBC_AD0N_64_AP8	AP8	GPIO_LED_0_LS
IO_L21P_T3L_N4_AD8P_64_AK10	AK10	PMBUS_ALERT_FPGA
IO_L21N_T3L_N5_AD8N_64_AL9	AL9	MAXIM_CABLE_B_FPGA
IO_L20P_T3L_N2_AD1P_64_AN9	AN9	SDIO_DATA1_FPGA
IO_L20N_T3L_N3_AD1N_64_AP9	AP9	SDIO_DATA0_FPGA
IO_L19P_T3L_N0_DBC_AD9P_64_AL10	AL10	SDIO_CLK_FPGA
IO_L19N_T3L_N1_DBC_AD9N_64_AM10	AM10	SDIO_CD_FPGA
IO_L18P_T2U_N10_AD2P_64_AH9	AH9	SDIO_DATA2_FPGA
IO_L18N_T2U_N11_AD2N_64_AH8	AH8	SDIO_DATA3_FPGA
IO_L17P_T2U_N8_AD10P_64_AD9	AD9	SDIO_CMD_FPGA
IO_L17N_T2U_N9_AD10N_64_AD8	AD8	NC
IO_L16P_T2U_N6_QBC_AD3P_64_AD10	AD10	GPIO_SW_N
IO_L16N_T2U_N7_QBC_AD3N_64_AE10	AE10	GPIO_SW_C
IO_L15P_T2L_N4_AD11P_64_AE8	AE8	GPIO_SW_E
IO_L15N_T2L_N5_AD11N_64_AF8	AF8	GPIO_SW_S
IO_L14P_T2L_N2_GC_64_AF9	AF9	GPIO_SW_W
IO_L14N_T2L_N3_GC_64_AG9	AG9	SYSCTLR_GPIO_6
IO_T2U_N12_64_AJ10	AJ10	SYSCTLR_GPIO_5
IO_L13P_T2L_N0_GC_QBC_64_AF10	AF10	SYSCTLR_GPIO_7
IO_L13N_T2L_N1_GC_QBC_64_AG10	AG10	HDMI_R_D16
VREF_64_AD13	AD13	NC
IO_L12P_T1U_N10_GC_64_AG11	AG11	REC_CLOCK_C_P
IO_L12N_T1U_N11_GC_64_AH11	AH11	REC_CLOCK_C_N
IO_T1U_N12_64_AJ11	AJ11	HDMI_R_D15
IO_L11P_T1U_N8_GC_64_AG12	AG12	HDMI_R_D14
IO_L11N_T1U_N9_GC_64_AH12	AH12	HDMI_R_D13
IO_L10P_T1U_N6_QBC_AD4P_64_AD11	AD11	HDMI_R_D12
IO_L10N_T1U_N7_QBC_AD4N_64_AE11	AE11	HDMI_R_DE
IO_L9P_T1L_N4_AD12P_64_AE12	AE12	HDMI_R_SPDIF
IO_L9N_T1L_N5_AD12N_64_AF12	AF12	HDMI_SPDIF_OUT_LS
IO_L8P_T1L_N2_AD5P_64_AH13	AH13	HDMI_R_VSYNC
IO_L8N_T1L_N3_AD5N_64_AJ13	AJ13	HDMI_INT
IO_L7P_T1L_N0_QBC_AD13P_64_AE13	AE13	HDMI_R_HSYNC
IO_L7N_T1L_N1_QBC_AD13N_64_AF13	AF13	HDMI_R_CLK
IO_L6P_T0U_N10_AD6P_64_AK13	AK13	HDMI_R_D11
IO_L6N_T0U_N11_AD6N_64_AL13	AL13	HDMI_R_D10
IO_L5P_T0U_N8_AD14P_64_AK12	AK12	HDMI_R_D9
IO_L5N_T0U_N9_AD14N_64_AL12	AL12	HDMI_R_D8
IO_L4P_T0U_N6_DBC_AD7P_64_AM12	AM12	HDMI_R_D7
IO_L4N_T0U_N7_DBC_AD7N_64_AN12	AN12	HDMI_R_D6
IO_L3P_T0L_N4_AD15P_64_AM11	AM11	HDMI_R_D5
IO_L3N_T0L_N5_AD15N_64_AN11	AN11	HDMI_R_D4
IO_L2P_T0L_N2_64_AN13	AN13	HDMI_R_D3
IO_L2N_T0L_N3_64_AP13	AP13	HDMI_R_D2
IO_T0U_N12_64_AK11	AK11	HDMI_R_D0
IO_L1P_T0L_N0_DBC_64_AP11	AP11	HDMI_R_D1
IO_L1N_T0L_N1_DBC_64_AP10	AP10	IIC_MUX_RESET_B_LS

VCC1V8_FPGA

AF11	VCCO_64_AF11
AG8	VCCO_64_AG8
AJ12	VCCO_64_AJ12
AK9	VCCO_64_AK9
AM13	VCCO_64_AM13
AN10	VCCO_64_AN10

U1 SOC_IRONWOOD_FF1156

Bank 65 HR

SOC_KU040_FFVA1156_IRON_REVD

BANK 65
XCKU040FFVA1156

IO_L24P_T3U_N10_EMCCLK_65_K20	K20	FPGA_EMCCLK
IO_L24N_T3U_N11_DOUT_CSO_B_65_K21	K21	SFP0_LOS_LS
IO_T3U_N12_PERSTN0_65_K22	K22	PCIE_PERST_LS
IO_L23P_T3U_N8_I2C_SCLK_65_N21	N21	SYSMON_SCL_LS
IO_L23N_T3U_N9_I2C_SDA_65_M21	M21	SYSMON_SDA_LS
IO_L22P_T3U_N6_DBC_AD0P_D04_65_M20	M20	QSPI1_IO0
IO_L22N_T3U_N7_DBC_AD0N_D05_65_L20	L20	QSPI1_IO1
IO_L21P_T3L_N4_AD8P_D06_65_R21	R21	QSPI1_IO2
IO_L21N_T3L_N5_AD8N_D07_65_R22	R22	QSPI1_IO3
IO_L20P_T3L_N2_AD1P_D08_65_P20	P20	GPIO_LED_2_LS
IO_L20N_T3L_N3_AD1N_D09_65_P21	P21	GPIO_LED_3_LS
IO_L19P_T3L_N0_DBC_AD9P_D10_65_N22	N22	GPIO_LED_4_LS
IO_L19N_T3L_N1_DBC_AD9N_D11_65_M22	M22	GPIO_LED_5_LS
IO_L18P_T2U_N10_AD2P_D12_65_R23	R23	GPIO_LED_6_LS
IO_L18N_T2U_N11_AD2N_D13_65_P23	P23	GPIO_LED_7_LS
IO_L17P_T2U_N8_AD10P_D14_65_R25	R25	NC
IO_L17N_T2U_N9_AD10N_D15_65_R26	R26	NC
IO_L16P_T2U_N6_QBC_AD3P_A00_D16_65_T24	T24	NC
IO_L16N_T2U_N7_QBC_AD3N_A01_D17_65_T25	T25	NC
IO_L15P_T2L_N4_AD11P_A02_D18_65_T27	T27	SYSMON_MUX_ADDR0_LS
IO_L15N_T2L_N5_AD11N_A03_D19_65_R27	R27	SYSMON_MUX_ADDR1_LS
IO_L14P_T2L_N2_GC_A04_D20_65_P24	P24	SGMII_RX_P
IO_L14N_T2L_N3_GC_A05_D21_65_P25	P25	SGMII_RX_N
IO_T2U_N12_CSI_ADV_B_65_N27	N27	SYSMON_MUX_ADDR2_LS
IO_L13P_T2L_N0_GC_QBC_A06_D22_65_P26	P26	SGMIICLK_P
IO_L13N_T2L_N1_GC_QBC_A07_D23_65_N26	N26	SGMIICLK_N
VREF_65_J21	J21	NC
IO_L12P_T1U_N10_GC_A08_D24_65_N24	N24	SGMII_TX_P
IO_L12N_T1U_N11_GC_A09_D25_65_M24	M24	SGMII_TX_N
IO_T1U_N12_PERSTN1_65_N23	N23	PCIE_WAKE_B_LS
IO_L11P_T1U_N8_GC_A10_D26_65_M25	M25	USER_SI570_CLOCK_P
IO_L11N_T1U_N9_GC_A11_D27_65_M26	M26	USER_SI570_CLOCK_N
IO_L10P_T1U_N6_QBC_AD4P_A12_D28_65_L22	L22	SI5328_INT_ALM_LS
IO_L10N_T1U_N7_QBC_AD4N_A13_D29_65_K23	K23	SI5328_RST_LS
IO_L9P_T1L_N4_AD12P_A14_D30_65_L25	L25	PHY_MDC_LS
IO_L9N_T1L_N5_AD12N_A15_D31_65_K25	K25	PHY_INT_LS
IO_L8P_T1L_N2_AD5P_A16_65_L23	L23	USB_UART_CTS
IO_L8N_T1L_N3_AD5N_A17_65_L24	L24	FMC_VADJ_ON_LS
IO_L7P_T1L_N0_QBC_AD13P_A18_65_M27	M27	VADJ_1V8_PGOOD_LS
IO_L7N_T1L_N1_QBC_AD13N_A19_65_L27	L27	FMC_HPC_PG_M2C_LS
IO_L6P_T0U_N10_AD6P_A20_65_J23	J23	PHY_RESET_LS
IO_L6N_T0U_N11_AD6N_A21_65_H24	H24	FMC_HPC_PRSNT_M2C_B_LS
IO_L5P_T0U_N8_AD14P_A22_65_J26	J26	FMC_LPC_PRSNT_M2C_B_LS
IO_L5N_T0U_N9_AD14N_A23_65_H26	H26	PHY_MDIO_LS
IO_L4P_T0U_N6_DBC_AD7P_A24_65_J24	J24	IIC_MAIN_SCL_LS
IO_L4N_T0U_N7_DBC_AD7N_A25_65_J25	J25	IIC_MAIN_SDA_LS
IO_L3P_T0L_N4_AD15P_A26_65_K26	K26	USB_UART_RX
IO_L3N_T0L_N5_AD15N_A27_65_K27	K27	USB_UART_RTS
IO_L2P_T0L_N2_FOE_B_65_G25	G25	USB_UART_TX
IO_L2N_T0L_N3_FWE_FCS2_B_65_G26	G26	QSPI1_CS_B
IO_T0U_N12_A28_65_H23	H23	GPIO_LED_1_LS
IO_L1P_T0L_N0_DBC_RS0_65_H27	H27	USER_SMA_GPIO_P
IO_L1N_T0L_N1_DBC_RS1_65_G27	G27	USER_SMA_GPIO_N

VCC1V8_FPGA

H25	VCCO_65_H25
J22	VCCO_65_J22
L26	VCCO_65_L26
M23	VCCO_65_M23
N20	VCCO_65_N20
P27	VCCO_65_P27
R24	VCCO_65_R24

U1 SOC_IRONWOOD_FF1156

SGMIICLK_P — R865 (1, 2) — 100, 1/10W, 1% — SGMIICLK_N

SGMII_RX_P — R888 (1, 2) — 100, 1/10W, 1% — SGMII_RX_N

USER_SI570_CLOCK_P — R866 (1, 2) — 100, 1/10W, 1% — USER_SI570_CLOCK_N

FPGA Banks 64 65

XILINX

TITLE: FPGA Banks 64 65 SCHEM, ROHS COMPLIANT HW-U1-KCU105_REV1_1	ASSY P/N: 0431811 PCB P/N: 1280723 SCH P/N: 0381556 TEST P/N: TSS0165
DATE: 05/20/2015:19:32	VER: 1.1
SHEET SIZE: B	REV: 02
SHEET 7 OF 66	DRAWN BY: BF

Layout: Place resistor and capacitor for VREF
Underneath the FPGA via array
right next to the via

Bank 66 HP

SOC_KU040_FFVA1156_IRON_REVD

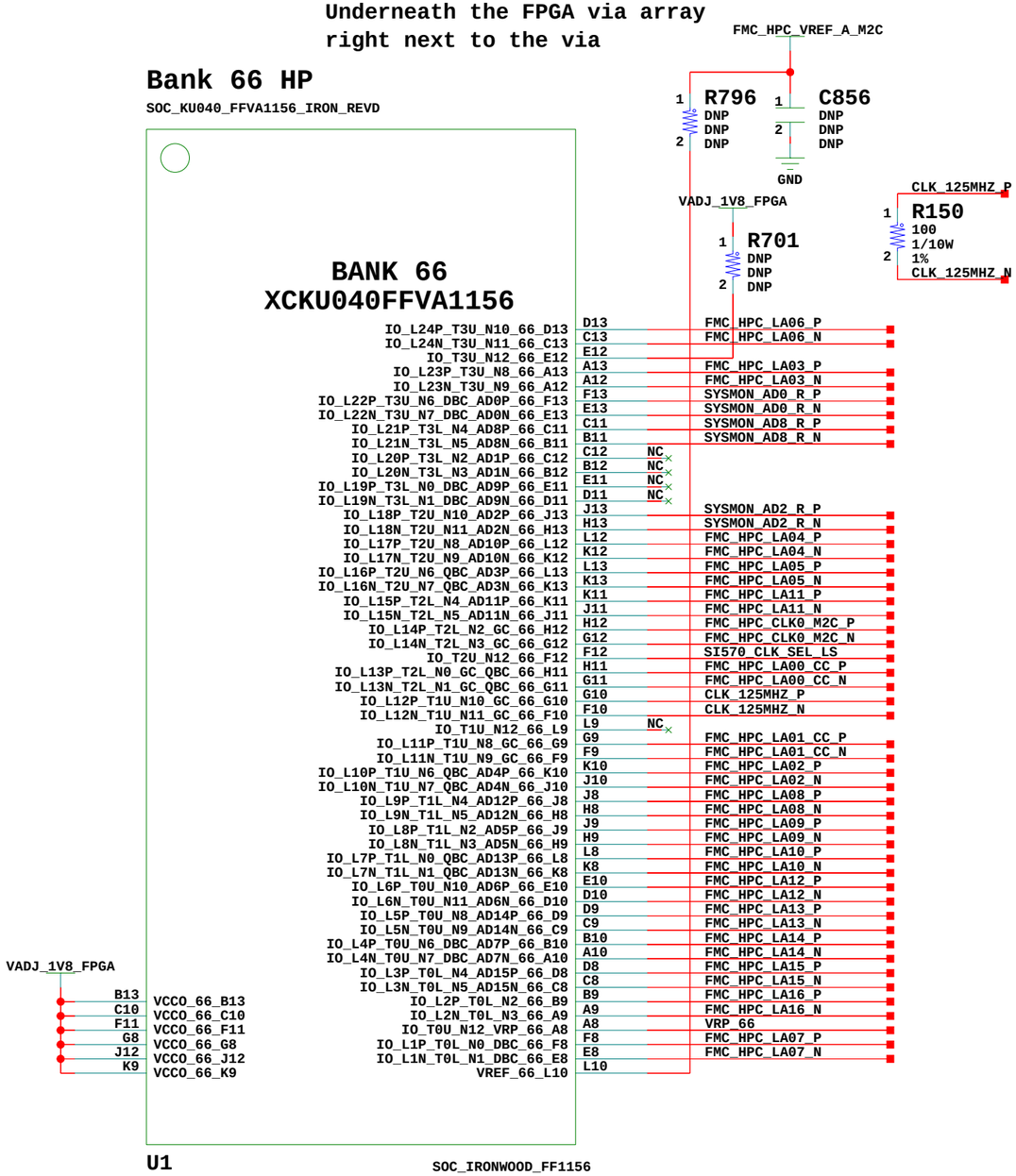

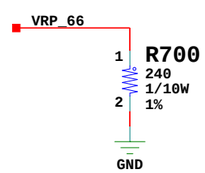

Bank 67 HP

SOC_KU040_FFVA1156_IRON_REVD

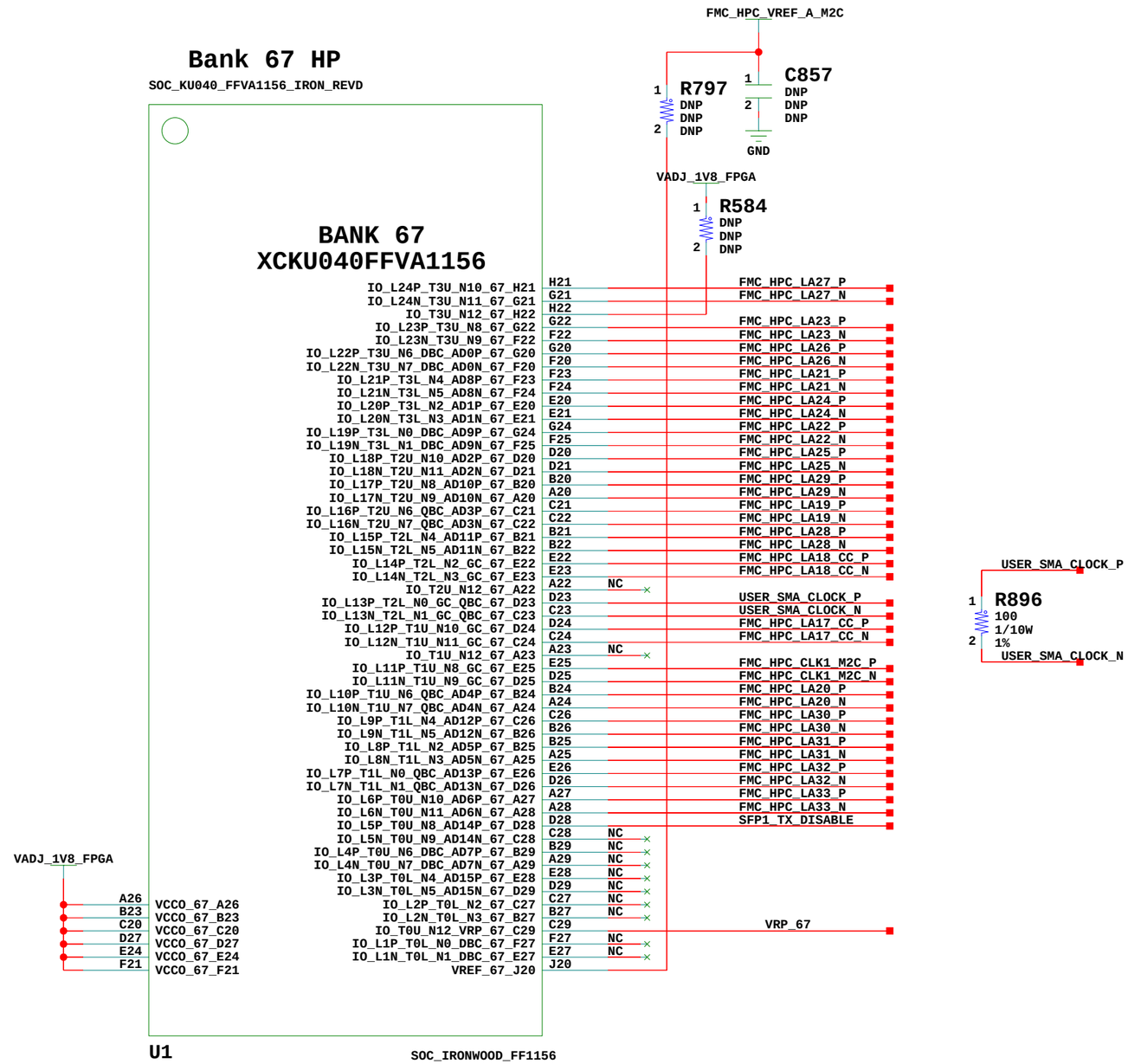

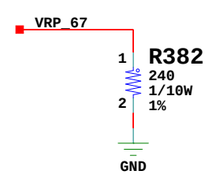

FPGA Banks 66 67

XILINX

TITLE: FPGA Banks 66 67 SCHEM, ROHS COMPLIANT HW-U1-KCU105_REV1_1	ASSY P/N: 0431811 PCB P/N: 1280723 SCH P/N: 0381556 TEST P/N: TSS0165
DATE: 05/20/2015:19:32	VER: 1.1
SHEET SIZE: B	REV: 02
SHEET 8 OF 66	DRAWN BY: BF

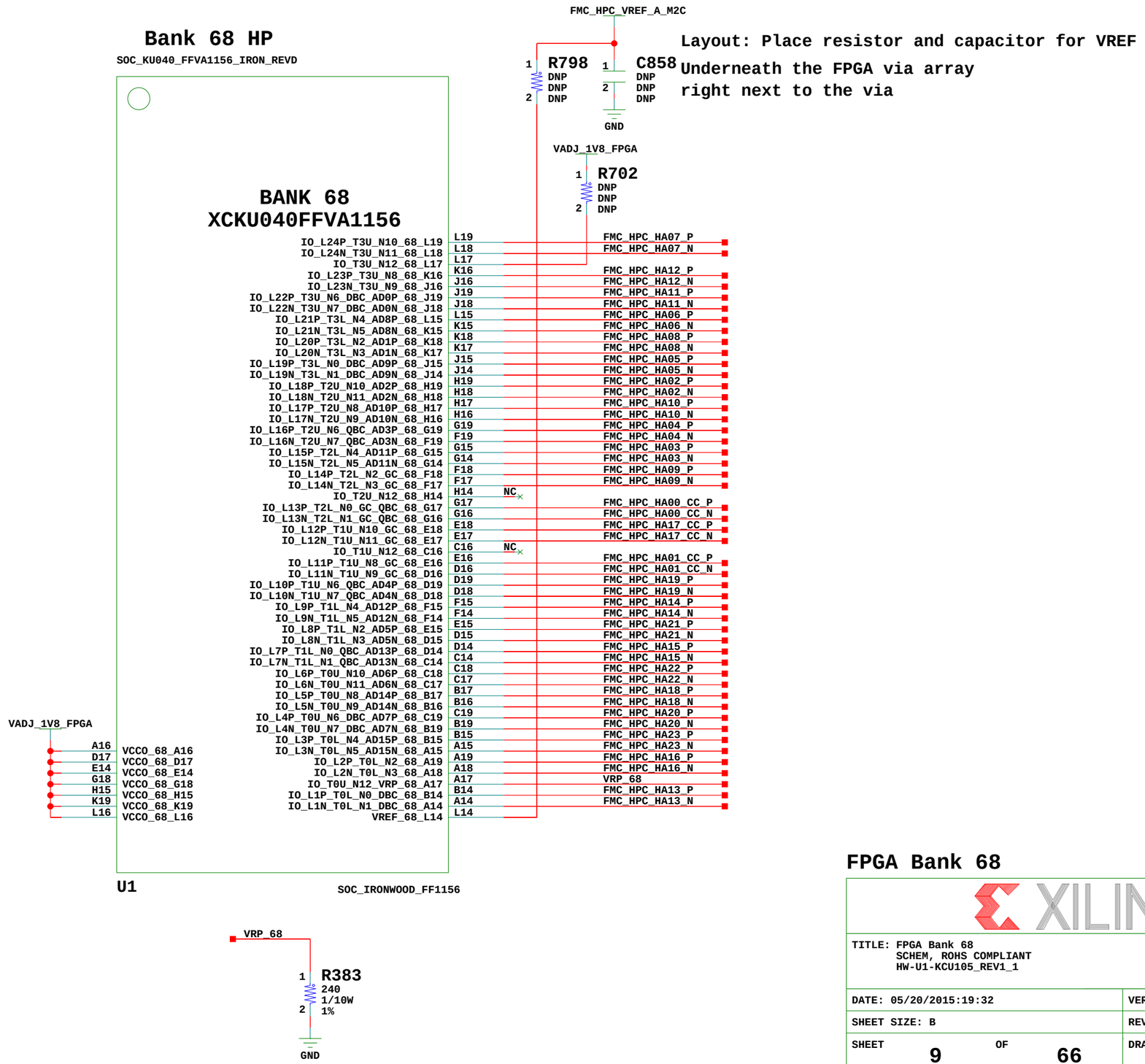

FPGA Bank 68

XILINX

TITLE: FPGA Bank 68 SCHEM, ROHS COMPLIANT HW-U1-KCU105_REV1_1	ASSY P/N: 0431811 PCB P/N: 1280723 SCH P/N: 0381556 TEST P/N: TSS0165
DATE: 05/20/2015:19:32	VER: 1.1
SHEET SIZE: B	REV: 02
SHEET 9 OF 66	DRAWN BY: BF

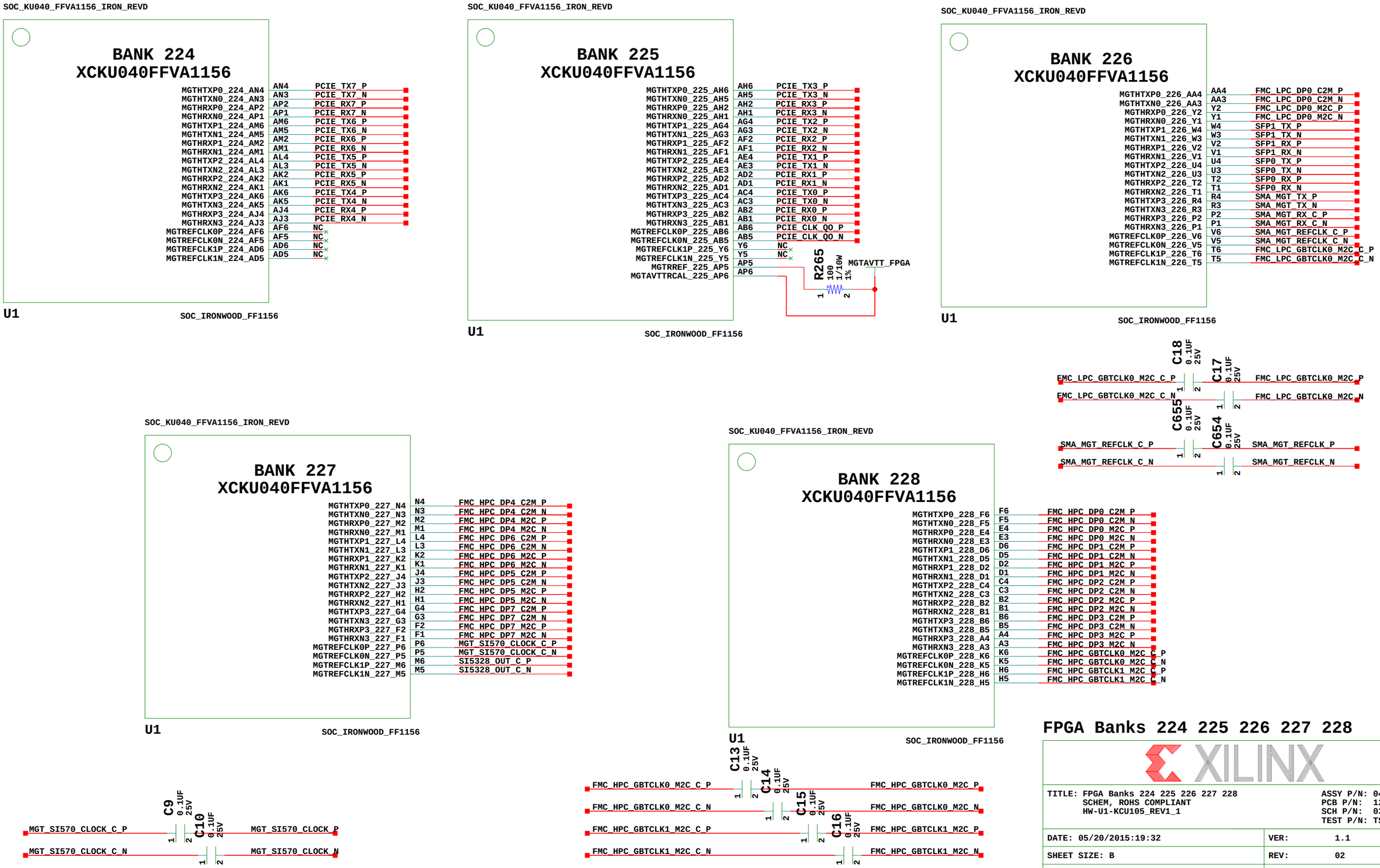
SOC_KU040_FFVA1156_IRON_REVD
BANK 224
XCKU040FFVA1156
MGTHTXP0_224_AN4 AN4 PCIE_TX7_P
MGTHTXN0_224_AN3 AN3 PCIE_TX7_N
MGTHRXP0_224_AP2 AP2 PCIE_RX7_P
MGTHRXN0_224_AP1 AP1 PCIE_RX7_N
MGTHTXP1_224_AM6 AM6 PCIE_TX6_P
MGTHTXN1_224_AM5 AM5 PCIE_TX6_N
MGTHRXP1_224_AM2 AM2 PCIE_RX6_P
MGTHRXN1_224_AM1 AM1 PCIE_RX6_N
MGTHTXP2_224_AL4 AL4 PCIE_TX5_P
MGTHTXN2_224_AL3 AL3 PCIE_TX5_N
MGTHRXP2_224_AK2 AK2 PCIE_RX5_P
MGTHRXN2_224_AK1 AK1 PCIE_RX5_N
MGTHTXP3_224_AK6 AK6 PCIE_TX4_P
MGTHTXN3_224_AK5 AK5 PCIE_TX4_N
MGTHRXP3_224_AJ4 AJ4 PCIE_RX4_P
MGTHRXN3_224_AJ3 AJ3 PCIE_RX4_N
MGTREFCLK0P_224_AF6 AF6 NC
MGTREFCLK0N_224_AF5 AF5 NC
MGTREFCLK1P_224_AD6 AD6 NC
MGTREFCLK1N_224_AD5 AD5 NC
U1
SOC_IRONWOOD_FF1156
SOC_KU040_FFVA1156_IRON_REVD
BANK 225
XCKU040FFVA1156
MGTHTXP0_225_AH6 AH6 PCIE_TX3_P
MGTHTXN0_225_AH5 AH5 PCIE_TX3_N
MGTHRXP0_225_AH2 AH2 PCIE_RX3_P
MGTHRXN0_225_AH1 AH1 PCIE_RX3_N
MGTHTXP1_225_AG4 AG4 PCIE_TX2_P
MGTHTXN1_225_AG3 AG3 PCIE_TX2_N
MGTHRXP1_225_AF2 AF2 PCIE_RX2_P
MGTHRXN1_225_AF1 AF1 PCIE_RX2_N
MGTHTXP2_225_AE4 AE4 PCIE_TX1_P
MGTHTXN2_225_AE3 AE3 PCIE_TX1_N
MGTHRXP2_225_AD2 AD2 PCIE_RX1_P
MGTHRXN2_225_AD1 AD1 PCIE_RX1_N
MGTHTXP3_225_AC4 AC4 PCIE_TX0_P
MGTHTXN3_225_AC3 AC3 PCIE_TX0_N
MGTHRXP3_225_AB2 AB2 PCIE_RX0_P
MGTHRXN3_225_AB1 AB1 PCIE_RX0_N
MGTREFCLK0P_225_AB6 AB6 PCIE_CLK_QO_P
MGTREFCLK0N_225_AB5 AB5 PCIE_CLK_QO_N
MGTREFCLK1P_225_Y6 Y6 NC
MGTREFCLK1N_225_Y5 Y5 NC
MGTRREF_225_AP5 AP5
MGTAVTTRCAL_225_AP6 AP6
R265
100
1/10W
1%
MGTAVTT_FPGA
U1
SOC_IRONWOOD_FF1156
SOC_KU040_FFVA1156_IRON_REVD
BANK 226
XCKU040FFVA1156
MGTHTXP0_226_AA4 AA4 FMC_LPC_DP0_C2M_P
MGTHTXN0_226_AA3 AA3 FMC_LPC_DP0_C2M_N
MGTHRXP0_226_Y2 Y2 FMC_LPC_DP0_M2C_P
MGTHRXN0_226_Y1 Y1 FMC_LPC_DP0_M2C_N
MGTHTXP1_226_W4 W4 SFP1_TX_P
MGTHTXN1_226_W3 W3 SFP1_TX_N
MGTHRXP1_226_V2 V2 SFP1_RX_P
MGTHRXN1_226_V1 V1 SFP1_RX_N
MGTHTXP2_226_U4 U4 SFP0_TX_P
MGTHTXN2_226_U3 U3 SFP0_TX_N
MGTHRXP2_226_T2 T2 SFP0_RX_P
MGTHRXN2_226_T1 T1 SFP0_RX_N
MGTHTXP3_226_R4 R4 SMA_MGT_TX_P
MGTHTXN3_226_R3 R3 SMA_MGT_TX_N
MGTHRXP3_226_P2 P2 SMA_MGT_RX_C_P
MGTHRXN3_226_P1 P1 SMA_MGT_RX_C_N
MGTREFCLK0P_226_V6 V6 SMA_MGT_REFCLK_C_P
MGTREFCLK0N_226_V5 V5 SMA_MGT_REFCLK_C_N
MGTREFCLK1P_226_T6 T6 FMC_LPC_GBTCLK0_M2C_C_P
MGTREFCLK1N_226_T5 T5 FMC_LPC_GBTCLK0_M2C_C_N
U1
SOC_IRONWOOD_FF1156
C18 0.1UF 25V
C17 0.1UF 25V
FMC_LPC_GBTCLK0_M2C_C_P
FMC_LPC_GBTCLK0_M2C_P
FMC_LPC_GBTCLK0_M2C_C_N
FMC_LPC_GBTCLK0_M2C_N
C655 0.1UF 25V
C654 0.1UF 25V
SMA_MGT_REFCLK_C_P
SMA_MGT_REFCLK_P
SMA_MGT_REFCLK_C_N
SMA_MGT_REFCLK_N
SOC_KU040_FFVA1156_IRON_REVD
BANK 227
XCKU040FFVA1156
MGTHTXP0_227_N4 N4 FMC_HPC_DP4_C2M_P
MGTHTXN0_227_N3 N3 FMC_HPC_DP4_C2M_N
MGTHRXP0_227_M2 M2 FMC_HPC_DP4_M2C_P
MGTHRXN0_227_M1 M1 FMC_HPC_DP4_M2C_N
MGTHTXP1_227_L4 L4 FMC_HPC_DP6_C2M_P
MGTHTXN1_227_L3 L3 FMC_HPC_DP6_C2M_N
MGTHRXP1_227_K2 K2 FMC_HPC_DP6_M2C_P
MGTHRXN1_227_K1 K1 FMC_HPC_DP6_M2C_N
MGTHTXP2_227_J4 J4 FMC_HPC_DP5_C2M_P
MGTHTXN2_227_J3 J3 FMC_HPC_DP5_C2M_N
MGTHRXP2_227_H2 H2 FMC_HPC_DP5_M2C_P
MGTHRXN2_227_H1 H1 FMC_HPC_DP5_M2C_N
MGTHTXP3_227_G4 G4 FMC_HPC_DP7_C2M_P
MGTHTXN3_227_G3 G3 FMC_HPC_DP7_C2M_N
MGTHRXP3_227_F2 F2 FMC_HPC_DP7_M2C_P
MGTHRXN3_227_F1 F1 FMC_HPC_DP7_M2C_N
MGTREFCLK0P_227_P6 P6 MGT_SI570_CLOCK_C_P
MGTREFCLK0N_227_P5 P5 MGT_SI570_CLOCK_C_N
MGTREFCLK1P_227_M6 M6 SI5328_OUT_C_P
MGTREFCLK1N_227_M5 M5 SI5328_OUT_C_N
U1
SOC_IRONWOOD_FF1156
C9 0.1UF 25V
C10 0.1UF 25V
MGT_SI570_CLOCK_C_P
MGT_SI570_CLOCK_P
MGT_SI570_CLOCK_C_N
MGT_SI570_CLOCK_N
SOC_KU040_FFVA1156_IRON_REVD
BANK 228
XCKU040FFVA1156
MGTHTXP0_228_F6 F6 FMC_HPC_DP0_C2M_P
MGTHTXN0_228_F5 F5 FMC_HPC_DP0_C2M_N
MGTHRXP0_228_E4 E4 FMC_HPC_DP0_M2C_P
MGTHRXN0_228_E3 E3 FMC_HPC_DP0_M2C_N
MGTHTXP1_228_D6 D6 FMC_HPC_DP1_C2M_P
MGTHTXN1_228_D5 D5 FMC_HPC_DP1_C2M_N
MGTHRXP1_228_D2 D2 FMC_HPC_DP1_M2C_P
MGTHRXN1_228_D1 D1 FMC_HPC_DP1_M2C_N
MGTHTXP2_228_C4 C4 FMC_HPC_DP2_C2M_P
MGTHTXN2_228_C3 C3 FMC_HPC_DP2_C2M_N
MGTHRXP2_228_B2 B2 FMC_HPC_DP2_M2C_P
MGTHRXN2_228_B1 B1 FMC_HPC_DP2_M2C_N
MGTHTXP3_228_B6 B6 FMC_HPC_DP3_C2M_P
MGTHTXN3_228_B5 B5 FMC_HPC_DP3_C2M_N
MGTHRXP3_228_A4 A4 FMC_HPC_DP3_M2C_P
MGTHRXN3_228_A3 A3 FMC_HPC_DP3_M2C_N
MGTREFCLK0P_228_K6 K6 FMC_HPC_GBTCLK0_M2C_C_P
MGTREFCLK0N_228_K5 K5 FMC_HPC_GBTCLK0_M2C_C_N
MGTREFCLK1P_228_H6 H6 FMC_HPC_GBTCLK1_M2C_C_P
MGTREFCLK1N_228_H5 H5 FMC_HPC_GBTCLK1_M2C_C_N
U1
SOC_IRONWOOD_FF1156
C13 0.1UF 25V
C14 0.1UF 25V
C15 0.1UF 25V
C16 0.1UF 25V
FMC_HPC_GBTCLK0_M2C_C_P
FMC_HPC_GBTCLK0_M2C_P
FMC_HPC_GBTCLK0_M2C_C_N
FMC_HPC_GBTCLK0_M2C_N
FMC_HPC_GBTCLK1_M2C_C_P
FMC_HPC_GBTCLK1_M2C_P
FMC_HPC_GBTCLK1_M2C_C_N
FMC_HPC_GBTCLK1_M2C_N
FPGA Banks 224 225 226 227 228
XILINX
TITLE: FPGA Banks 224 225 226 227 228
SCHEM, ROHS COMPLIANT
HW-U1-KCU105_REV1_1
ASSY P/N: 0431811
PCB P/N: 1280723
SCH P/N: 0381556
TEST P/N: TSS0165
DATE: 05/20/2015:19:32
VER: 1.1
SHEET SIZE: B
REV: 02
SHEET 10 OF 66
DRAWN BY: BF

SOC_KU040_FFVA1156_IRON_REVD

BANK MGTAVCC_R
XCKU040FFVA1156

MGTAVCC_FPGA

MGTAVCC_R_AN6	AN6
MGTAVCC_R_AL6	AL6
MGTAVCC_R_AJ6	AJ6
MGTAVCC_R_AG6	AG6
MGTAVCC_R_AE6	AE6
MGTAVCC_R_AC6	AC6
MGTAVCC_R_W6	W6
MGTAVCC_R_U6	U6
MGTAVCC_R_N6	N6
MGTAVCC_R_L6	L6
MGTAVCC_R_J6	J6
MGTAVCC_R_G6	G6
MGTAVCC_R_E6	E6
MGTAVCC_R_C6	C6

U1 SOC_IRONWOOD_FF1156

SOC_KU040_FFVA1156_IRON_REVD

BANK MGTAVCC_L
XCKU040FFVA1156

MGTAVCC_L_P29	P29
MGTAVCC_L_N31	N31
MGTAVCC_L_J31	J31
MGTAVCC_L_H29	H29
MGTAVCC_L_F30	F30
MGTAVCC_L_E31	E31

GND

U1 SOC_IRONWOOD_FF1156

SOC_KU040_FFVA1156_IRON_REVD

BANK VCCAUX
XCKU040FFVA1156

VCCAUX_FPGA

VCCAUX_AC8	AC8
VCCAUX_AA8	AA8
VCCAUX_W8	W8
VCCAUX_U8	U8

U1 SOC_IRONWOOD_FF1156

SOC_KU040_FFVA1156_IRON_REVD

BANK MGTAVTT_R
XCKU040FFVA1156

MGTAVTT_FPGA

MGTAVTT_R_AM3	AM3
MGTAVTT_R_AL2	AL2
MGTAVTT_R_AH3	AH3
MGTAVTT_R_AG2	AG2
MGTAVTT_R_AD3	AD3
MGTAVTT_R_AC2	AC2
MGTAVTT_R_Y3	Y3
MGTAVTT_R_W2	W2
MGTAVTT_R_T3	T3
MGTAVTT_R_R2	R2
MGTAVTT_R_M3	M3
MGTAVTT_R_L2	L2
MGTAVTT_R_H3	H3
MGTAVTT_R_G2	G2
MGTAVTT_R_D3	D3
MGTAVTT_R_C2	C2

U1 SOC_IRONWOOD_FF1156

SOC_KU040_FFVA1156_IRON_REVD

BANK MGTAVTT_L
XCKU040FFVA1156

MGTAVTT_L_R32	R32
MGTAVTT_L_P33	P33
MGTAVTT_L_L32	L32
MGTAVTT_L_K33	K33
MGTAVTT_L_H33	H33
MGTAVTT_L_G32	G32
MGTAVTT_L_D33	D33
MGTAVTT_L_C32	C32

GND

U1 SOC_IRONWOOD_FF1156

SOC_KU040_FFVA1156_IRON_REVD

BANK VCCAUX_IO
XCKU040FFVA1156

VCCAUX_FPGA

VCCAUX_IO_AC18	AC18
VCCAUX_IO_AB19	AB19
VCCAUX_IO_Y19	Y19
VCCAUX_IO_W20	W20
VCCAUX_IO_V19	V19
VCCAUX_IO_U20	U20
VCCAUX_IO_T19	T19
VCCAUX_IO_R20	R20
VCCAUX_IO_P19	P19
VCCAUX_IO_M19	M19
VCCAUX_IO_N18	N18

U1 SOC_IRONWOOD_FF1156

SOC_KU040_FFVA1156_IRON_REVD

BANK VCCBRAM
XCKU040FFVA1156

VCCBRAM_FPGA

VCCBRAM_AA18	AA18
VCCBRAM_AB17	AB17
VCCBRAM_Y17	Y17
VCCBRAM_V17	V17

U1 SOC_IRONWOOD_FF1156

SOC_KU040_FFVA1156_IRON_REVD

BANK MGTVCCAUX_R
XCKU040FFVA1156

MGTVCCAUX

MGTVCCAUX_R_AA6	AA6
MGTVCCAUX_R_R6	R6

U1 SOC_IRONWOOD_FF1156

SOC_KU040_FFVA1156_IRON_REVD

BANK MGTVCCAUX_L
XCKU040FFVA1156

MGTVCCAUX_L_M29	M29
MGTVCCAUX_L_K29	K29

GND

U1 SOC_IRONWOOD_FF1156

FPGA Power 1

XILINX

TITLE: FPGA Power 1 SCHEM, ROHS COMPLIANT HW-U1-KCU105_REV1_1	ASSY P/N: 0431811 PCB P/N: 1280723 SCH P/N: 0381556 TEST P/N: TSS0165
DATE: 05/20/2015:19:32	VER: 1.1
SHEET SIZE: B	REV: 02
SHEET 11 OF 66	DRAWN BY: BF

SOC_KU040_FFVA1156_IRON_REVD

BANK VCCINT
XCKU040FFVA1156

VCCINT_FPGA

VCCINT_AA16	AA16
VCCINT_W16	W16
VCCINT_U16	U16
VCCINT_R16	R16
VCCINT_N16	N16
VCCINT_R8	R8
VCCINT_N8	N8
VCCINT_T17	T17
VCCINT_AC16	AC16
VCCINT_AC14	AC14
VCCINT_AC12	AC12
VCCINT_AC10	AC10
VCCINT_AB15	AB15
VCCINT_AB13	AB13
VCCINT_AB11	AB11
VCCINT_AA14	AA14
VCCINT_AA12	AA12
VCCINT_AA10	AA10
VCCINT_Y15	Y15
VCCINT_Y13	Y13
VCCINT_W14	W14
VCCINT_W10	W10
VCCINT_V15	V15
VCCINT_V13	V13
VCCINT_U14	U14
VCCINT_U10	U10
VCCINT_T15	T15
VCCINT_T13	T13
VCCINT_T11	T11
VCCINT_T9	T9
VCCINT_R14	R14
VCCINT_R12	R12
VCCINT_R10	R10
VCCINT_P15	P15
VCCINT_P13	P13
VCCINT_P11	P11
VCCINT_P9	P9
VCCINT_N14	N14
VCCINT_N12	N12
VCCINT_N10	N10
VCCINT_M15	M15
VCCINT_M13	M13
VCCINT_M11	M11
VCCINT_M9	M9

U1

SOC_IRONWOOD_FF1156

SOC_KU040_FFVA1156_IRON_REVD

BANK VCCINT_IO
XCKU040FFVA1156

VCCINT_FPGA

VCCINT_IO_W18	W18
VCCINT_IO_U18	U18
VCCINT_IO_R18	R18
VCCINT_IO_P17	P17
VCCINT_IO_M17	M17

U1

SOC_IRONWOOD_FF1156

FPGA Power 2

XILINX

TITLE: FPGA Power 2 SCHEM, ROHS COMPLIANT HW-U1-KCU105_REV1_1	ASSY P/N: 0431811 PCB P/N: 1280723 SCH P/N: 0381556 TEST P/N: TSS0165
DATE: 05/20/2015:19:32	VER: 1.1
SHEET SIZE: B	REV: 02
SHEET 12 OF 66	DRAWN BY: BF

SOC_KU040_FFVA1156_IRON_REVD

BANK GND1
XCKU040FFVA1156

T16	GND_T16	GND_J7	J7
T14	GND_T14	GND_J5	J5
T12	GND_T12	GND_J2	J2
T10	GND_T10	GND_J1	J1
T8	GND_T8	GND_H34	H34
T4	GND_T4	GND_H30	H30
R31	GND_R31	GND_H28	H28
R28	GND_R28	GND_H20	H20
R19	GND_R19	GND_H10	H10
R17	GND_R17	GND_H7	H7
R15	GND_R15	GND_H4	H4
R13	GND_R13	GND_G31	G31
R11	GND_R11	GND_G28	G28
R9	GND_R9	GND_G23	G23
R5	GND_R5	GND_G13	G13
R1	GND_R1	GND_G7	G7
P34	GND_P34	GND_G5	G5
P30	GND_P30	GND_G1	G1
P28	GND_P28	GND_F34	F34
P22	GND_P22	GND_F33	F33
P18	GND_P18	GND_F29	F29
P16	GND_P16	GND_F28	F28
P14	GND_P14	GND_F26	F26
P12	GND_P12	GND_F16	F16
P10	GND_P10	GND_F7	F7
P4	GND_P4	GND_F4	F4
P3	GND_P3	GND_F3	F3
N32	GND_N32	GND_E32	E32
N28	GND_N28	GND_E30	E30
N25	GND_N25	GND_E29	E29
N19	GND_N19	GND_E19	E19
N17	GND_N17	GND_E9	E9
N15	GND_N15	GND_E7	E7
N13	GND_N13	GND_E5	E5
N11	GND_N11	GND_E2	E2
N9	GND_N9	GND_E1	E1
N5	GND_N5	GND_D34	D34
N2	GND_N2	GND_D30	D30
N1	GND_N1	GND_D22	D22
M34	GND_M34	GND_D12	D12
M33	GND_M33	GND_D7	D7
M30	GND_M30	GND_D4	D4
M28	GND_M28	GND_C31	C31
M18	GND_M18	GND_C30	C30
M16	GND_M16	GND_C25	C25
M14	GND_M14	GND_C15	C15
M12	GND_M12	GND_C7	C7
M10	GND_M10	GND_C5	C5
M8	GND_M8	GND_C1	C1
M4	GND_M4	GND_B34	B34
L31	GND_L31	GND_B33	B33
L28	GND_L28	GND_B30	B30
L21	GND_L21	GND_B28	B28
L11	GND_L11	GND_B18	B18
L5	GND_L5	GND_B8	B8
L1	GND_L1	GND_B7	B7
K34	GND_K34	GND_B4	B4
K30	GND_K30	GND_B3	B3
K28	GND_K28	GND_A32	A32
K24	GND_K24	GND_A31	A31
K14	GND_K14	GND_A30	A30
K4	GND_K4	GND_A21	A21
K3	GND_K3	GND_A11	A11
J32	GND_J32	GND_A7	A7
J28	GND_J28	GND_A6	A6
J27	GND_J27	GND_A5	A5
J17	GND_J17	GND_A2	A2
		GND_A1	A1

GND GND

U1 SOC_IRONWOOD_FF1156

SOC_KU040_FFVA1156_IRON_REVD

BANK GND2
XCKU040FFVA1156

AP32	GND_AP32	GND_AC11	AC11
AP22	GND_AP22	GND_V8	V8
AP12	GND_AP12	GND_AC5	AC5
AP7	GND_AP7	GND_AC1	AC1
AP4	GND_AP4	GND_AB28	AB28
AP3	GND_AP3	GND_AB18	AB18
AN25	GND_AN25	GND_AB16	AB16
AN15	GND_AN15	GND_AB14	AB14
AN7	GND_AN7	GND_AB12	AB12
AN5	GND_AN5	GND_AB10	AB10
AN2	GND_AN2	GND_AB4	AB4
AN1	GND_AN1	GND_AB3	AB3
AM28	GND_AM28	GND_AA31	AA31
AM18	GND_AM18	GND_AA21	AA21
AM8	GND_AM8	GND_AA19	AA19
AM7	GND_AM7	GND_AA17	AA17
AM4	GND_AM4	GND_AA15	AA15
AL31	GND_AL31	GND_AA13	AA13
AL21	GND_AL21	GND_AA11	AA11
AL11	GND_AL11	GND_P8	P8
AL7	GND_AL7	GND_AA5	AA5
AL5	GND_AL5	GND_AA2	AA2
AL1	GND_AL1	GND_AA1	AA1
AK34	GND_AK34	GND_Y34	Y34
AK24	GND_AK24	GND_Y24	Y24
AK14	GND_AK14	GND_Y20	Y20
AK7	GND_AK7	GND_Y18	Y18
AK4	GND_AK4	GND_Y16	Y16
AK3	GND_AK3	GND_Y14	Y14
AJ27	GND_AJ27	GND_Y10	Y10
AJ17	GND_AJ17	GND_Y4	Y4
AJ7	GND_AJ7	GND_W27	W27
AJ5	GND_AJ5	GND_W19	W19
AJ2	GND_AJ2	GND_W17	W17
AJ1	GND_AJ1	GND_W15	W15
AH30	GND_AH30	GND_W13	W13
AH20	GND_AH20	GND_AB8	AB8
AH10	GND_AH10	GND_W5	W5
AH7	GND_AH7	GND_W1	W1
AH4	GND_AH4	GND_V30	V30
AG33	GND_AG33	GND_V20	V20
AG23	GND_AG23	GND_V18	V18
AG13	GND_AG13	GND_V16	V16
AG7	GND_AG7	GND_V14	V14
AG5	GND_AG5	GND_V10	V10
AG1	GND_AG1	GND_V4	V4
AF26	GND_AF26	GND_V3	V3
AF16	GND_AF16	GND_U33	U33
AF7	GND_AF7	GND_U32	U32
AF4	GND_AF4	GND_U31	U31
AF3	GND_AF3	GND_U30	U30
AE29	GND_AE29	GND_U23	U23
AE19	GND_AE19	GND_U19	U19
AE9	GND_AE9	GND_U17	U17
AE7	GND_AE7	GND_U15	U15
AE5	GND_AE5	GND_U13	U13
AE2	GND_AE2	GND_Y8	Y8
AE1	GND_AE1	GND_U5	U5
AD32	GND_AD32	GND_U2	U2
AD22	GND_AD22	GND_U1	U1
AD12	GND_AD12	GND_T34	T34
AD4	GND_AD4	GND_T33	T33
AC25	GND_AC25	GND_T30	T30
AC19	GND_AC19	GND_T29	T29
AC17	GND_AC17	GND_T28	T28
AC15	GND_AC15	GND_T26	T26
AC13	GND_AC13	GND_T20	T20
		GND_T18	T18

GND GND

U1 SOC_IRONWOOD_FF1156

SOC_KU040_FFVA1156_IRON_REVD

NO CONNECTS
XCKU040FFVA1156

NC_H32	H32	G34	NC
NC_G34	G33	H31	NC
NC_G33	L30	L29	NC
NC_H31	G30	F32	NC
NC_L30	F31	G29	NC
NC_L29	D32	E34	NC
NC_G30	E33	D31	NC
NC_F32	J30	J29	NC
NC_F31	B32	C34	NC
NC_G29	C33	B31	NC
NC_D32	T32	R34	NC
NC_E34	R33	T31	NC
NC_E33	R30	R29	NC
NC_D31	P32	N34	NC
NC_J30	N33	P31	NC
NC_J29	A33	A34	NC
NC_B32	M32	L34	NC
NC_C34	L33	M31	NC
NC_C33	N30	N29	NC
NC_B31	K32	J34	NC
NC_T32	J33	K31	NC
NC_R34			
NC_R33			
NC_T31			
NC_R30			
NC_R29			
NC_P32			
NC_N34			
NC_N33			
NC_P31			
NC_A33			
NC_A34			
NC_M32			
NC_L34			
NC_L33			
NC_M31			
NC_N30			
NC_N29			
NC_K32			
NC_J34			
NC_J33			
NC_K31			

U1 SOC_IRONWOOD_FF1156

FPGA GND NC

XILINX

TITLE: FPGA GND NC SCHEM, ROHS COMPLIANT HW-U1-KCU105_REV1_1	ASSY P/N: 0431811 PCB P/N: 1280723 SCH P/N: 0381556 TEST P/N: TSS0165
DATE: 05/20/2015:19:32	VER: 1.1
SHEET SIZE: B	REV: 02
SHEET 13 OF 66	DRAWN BY: BF

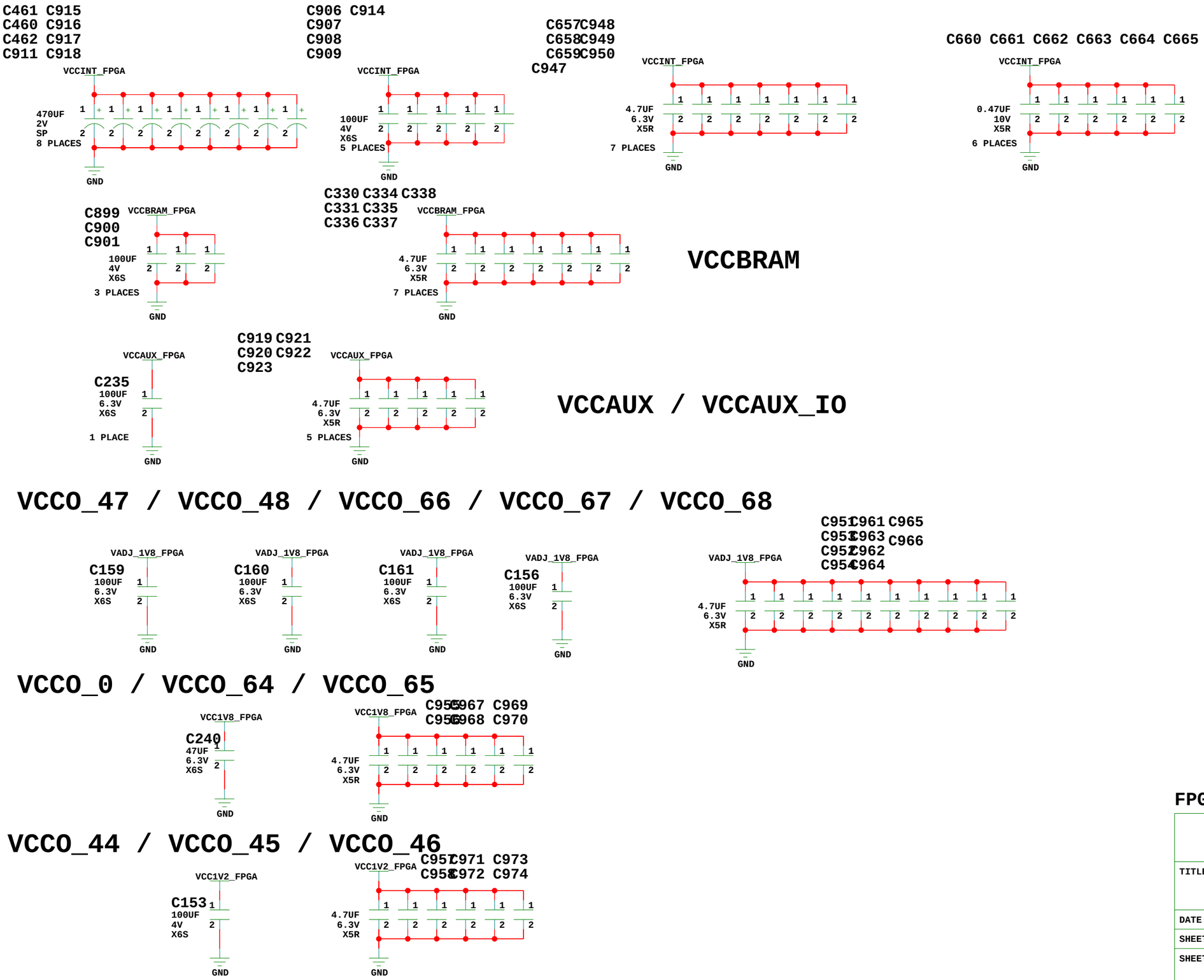

FPGA Decoupling 1

XILINX

TITLE: FPGA Decoupling 1 SCHEM, ROHS COMPLIANT HW-U1-KCU105_REV1_1	ASSY P/N: 0431811 PCB P/N: 1280723 SCH P/N: 0381556 TEST P/N: TSS0165
DATE: 05/20/2015:19:32	VER: 1.1
SHEET SIZE: B	REV: 02
SHEET 14 OF 66	DRAWN BY: BF

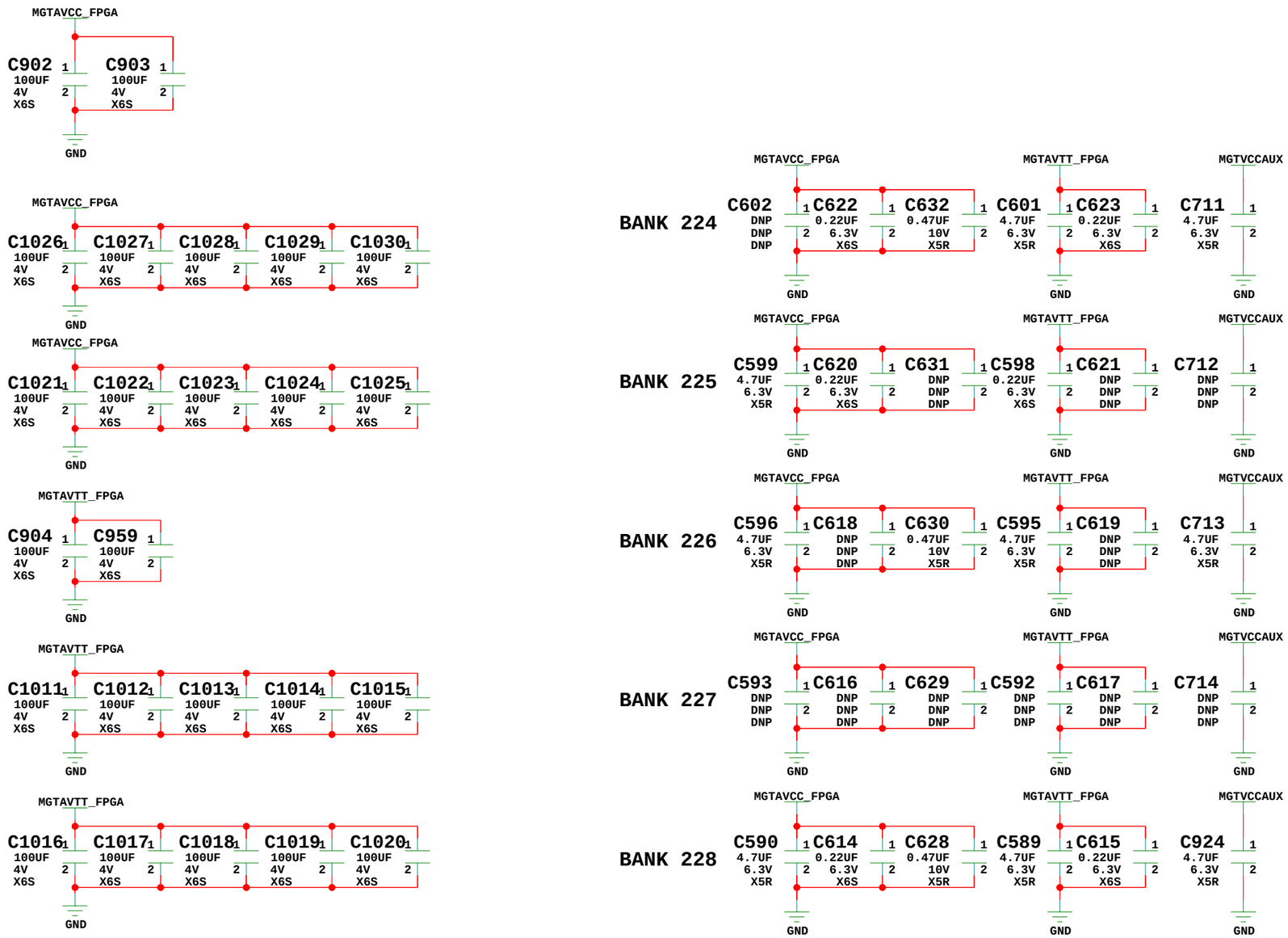

FPGA Decoupling 2

XILINX

TITLE: FPGA Decoupling 2 SCHEM, ROHS COMPLIANT HW-U1-KCU105_REV1_1	ASSY P/N: 0431811 PCB P/N: 1280723 SCH P/N: 0381556 TEST P/N: TSS0165
DATE: 05/20/2015:19:32	VER: 1.1
SHEET SIZE: B	REV: 02
SHEET 15 OF 66	DRAWN BY: BF

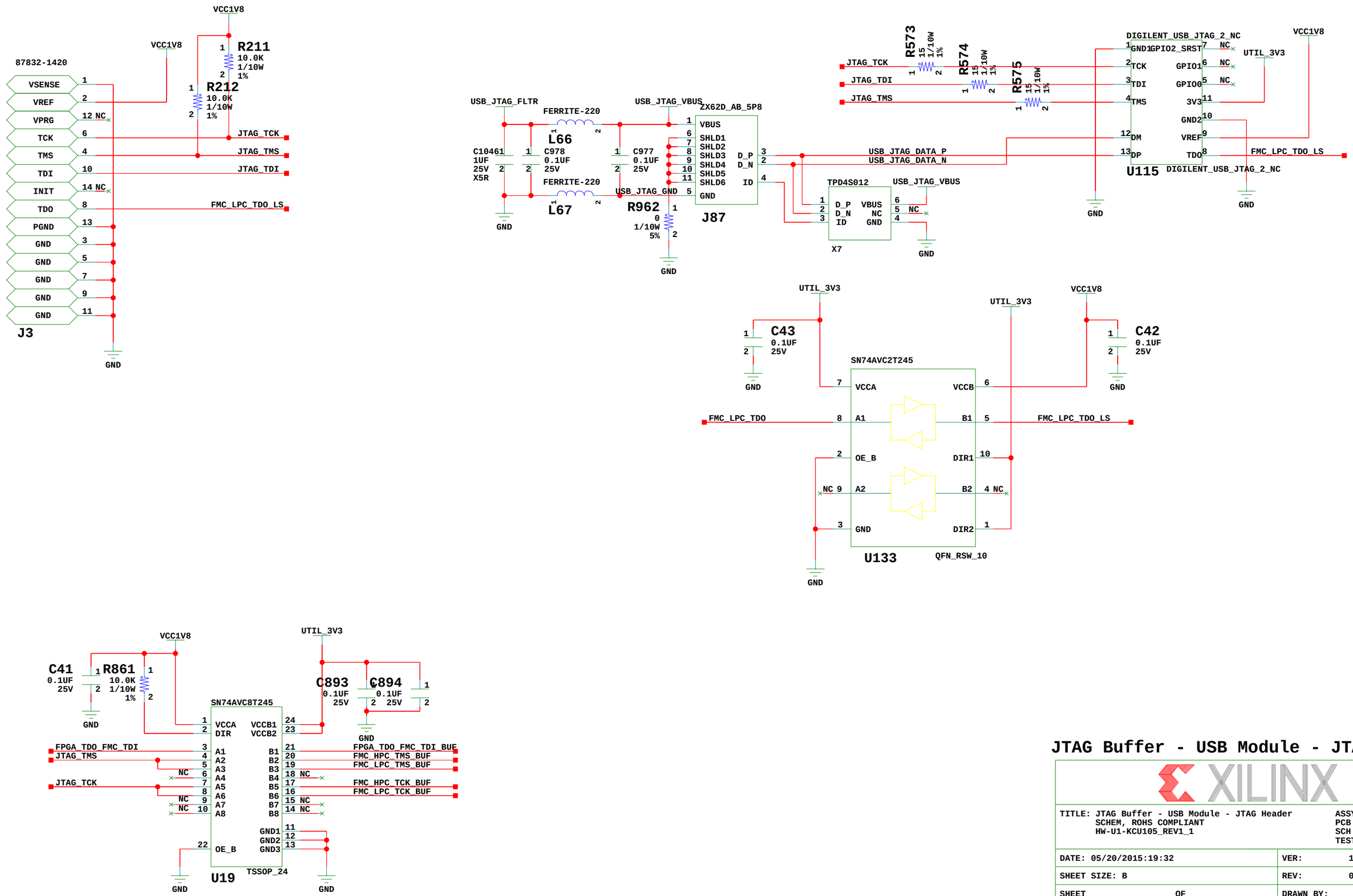

JTAG Buffer - USB Module - JTAG Header

XILINX

TITLE: JTAG Buffer - USB Module - JTAG Header SCHEM, ROHS COMPLIANT HW-U1-KCU105_REV1_1	ASSY P/N: 0431811 PCB P/N: 1280723 SCH P/N: 0381556 TEST P/N: TSS0165
DATE: 05/20/2015:19:32	VER: 1.1
SHEET SIZE: B	REV: 02
SHEET 16 OF 66	DRAWN BY: BF

Layout: Place 0.1UF cap in via matrix at M1

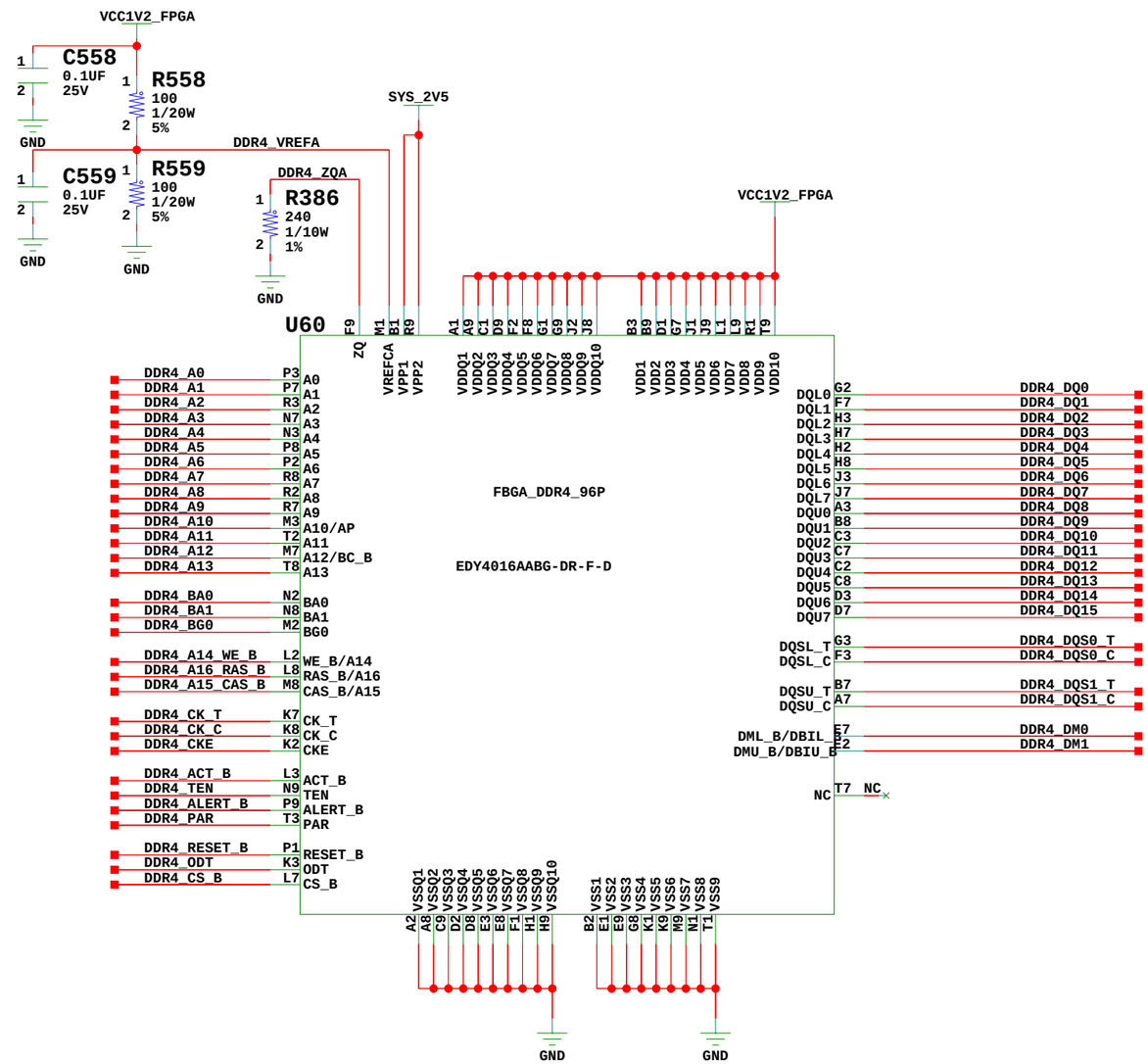

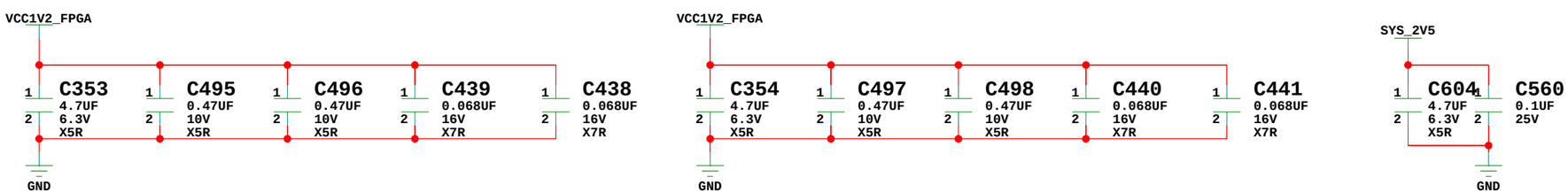

DDR4 Data [15-0]

XILINX

TITLE: DDR4 Data [15-0] SCHEM, ROHS COMPLIANT HW-U1-KCU105_REV1_1	ASSY P/N: 0431811 PCB P/N: 1280723 SCH P/N: 0381556 TEST P/N: TSS0165
DATE: 05/20/2015:19:32	VER: 1.1
SHEET SIZE: B	REV: 02
SHEET 17 OF 66	DRAWN BY: BF

Layout: Place 0.1UF cap in via matrix at M1

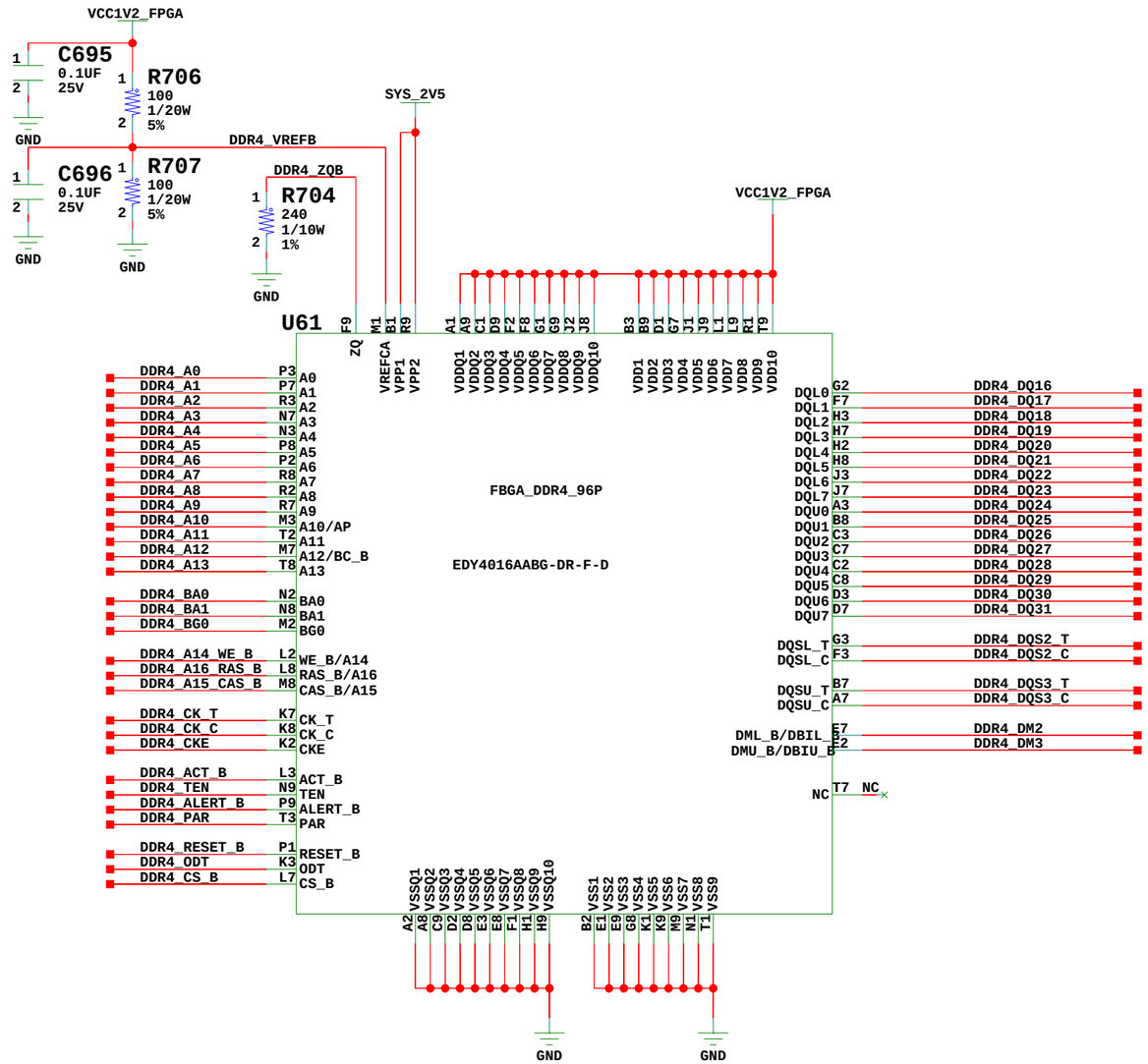

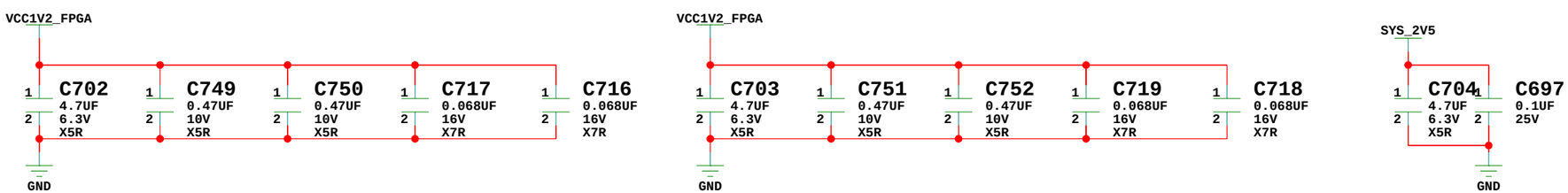

DDR4 Data [31-16]

XILINX

TITLE: DDR4 Data [31-16] SCHEM, ROHS COMPLIANT HW-U1-KCU105_REV1_1	ASSY P/N: 0431811 PCB P/N: 1280723 SCH P/N: 0381556 TEST P/N: TSS0165
DATE: 05/20/2015:19:32	VER: 1.1
SHEET SIZE: B	REV: 02
SHEET 18 OF 66	DRAWN BY: BF

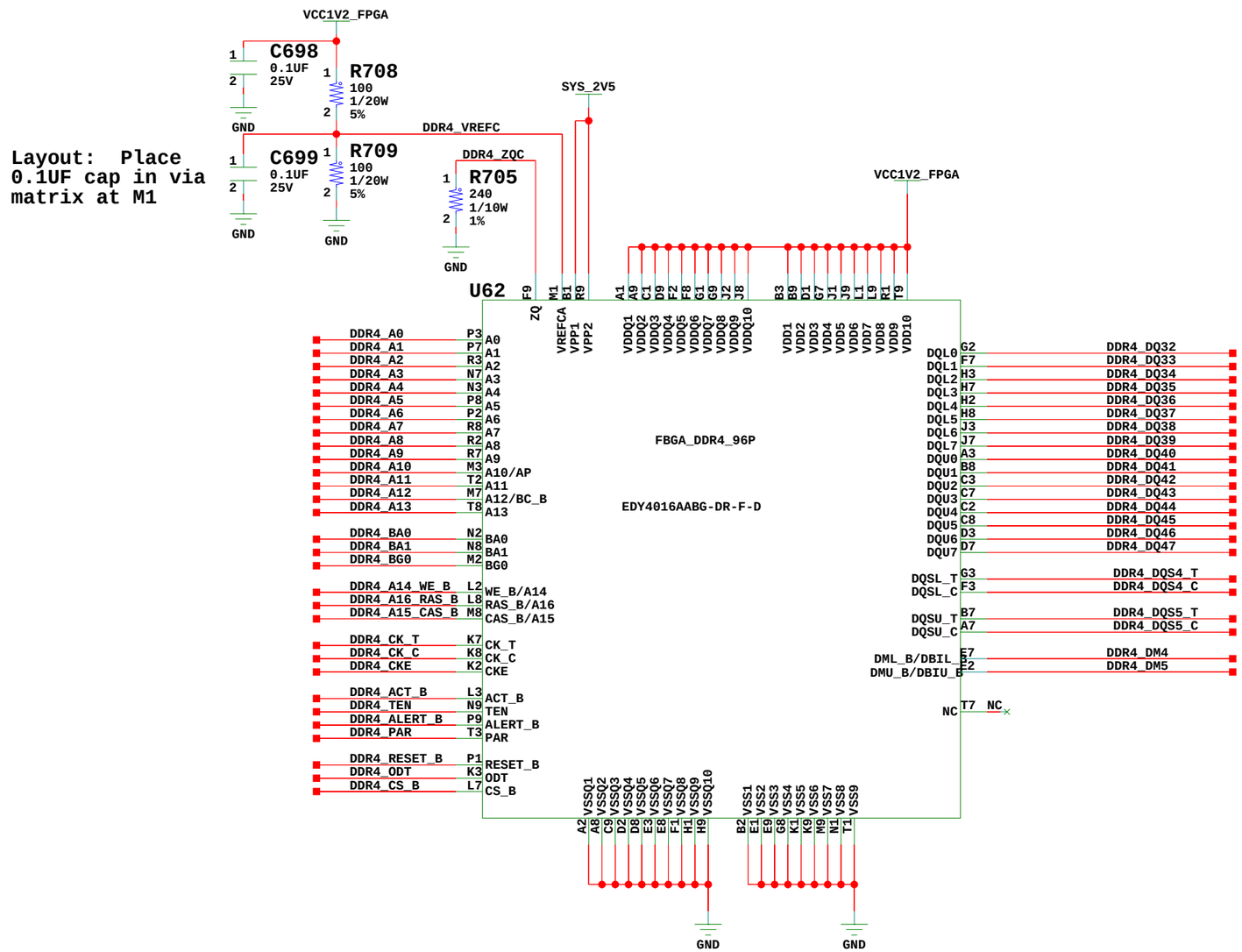

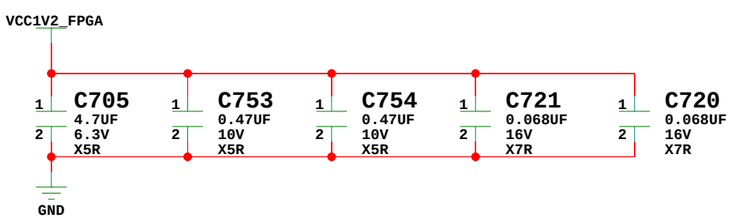

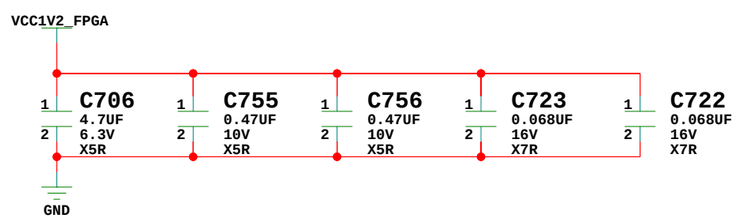

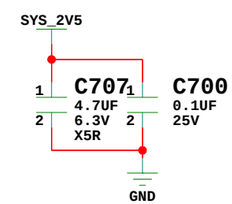

DDR4 Data [47-31]

XILINX

TITLE: DDR4 Data [47-31] SCHEM, ROHS COMPLIANT HW-U1-KCU105_REV1_1	ASSY P/N: 0431811 PCB P/N: 1280723 SCH P/N: 0381556 TEST P/N: TSS0165
DATE: 05/20/2015:19:32	VER: 1.1
SHEET SIZE: B	REV: 02
SHEET 19 OF 66	DRAWN BY: BF

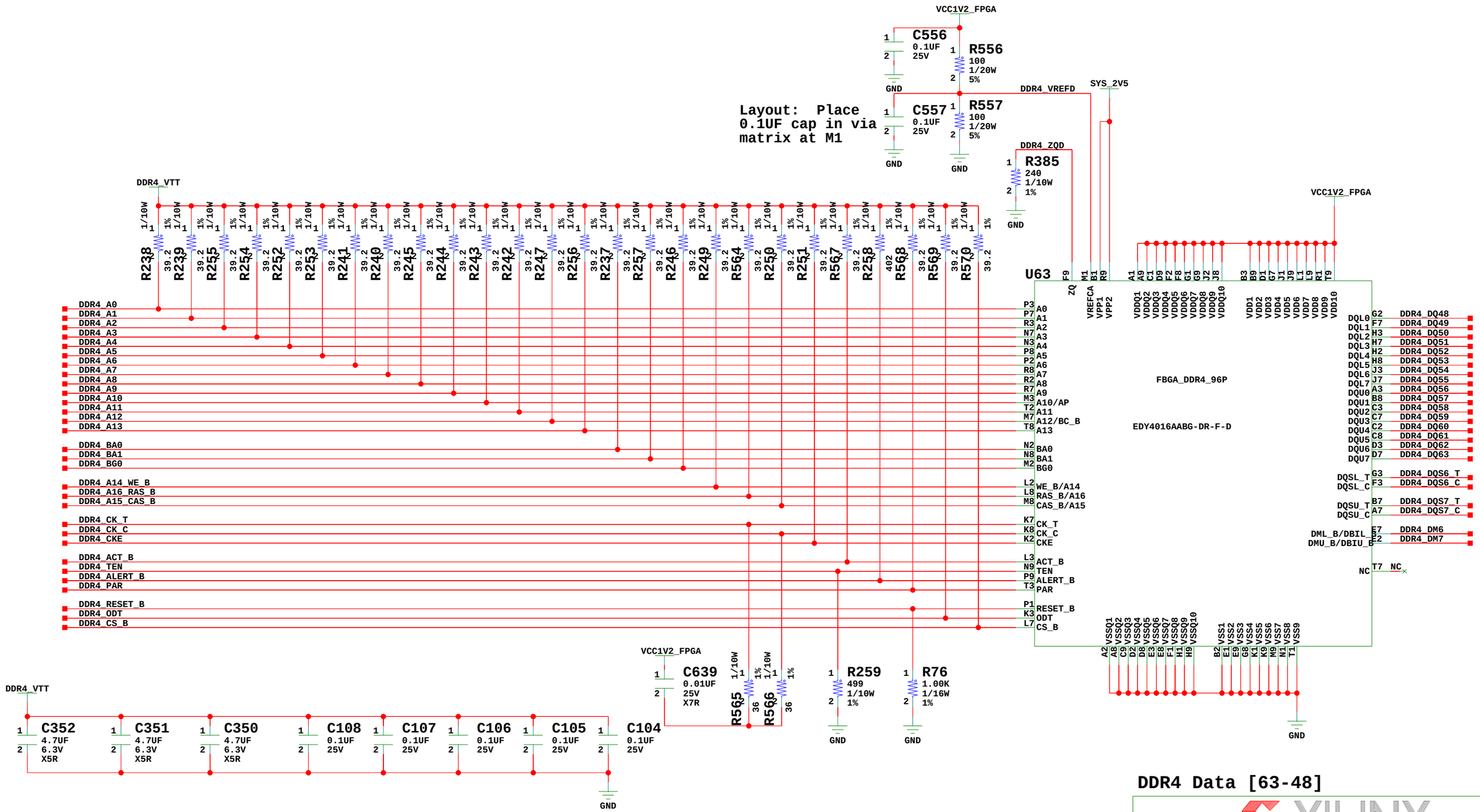

DDR4 Data [63-48]

XILINX

TITLE: DDR4 Data [63-48] SCHEM, ROHS COMPLIANT HW-U1-KCU105_REV1_1	ASSY P/N: 0431811 PCB P/N: 1280723 SCH P/N: 0381556 TEST P/N: TSS0165
DATE: 05/20/2015:19:32	VER: 1.1
SHEET SIZE: B	REV: 02
SHEET 20 OF 66	DRAWN BY: BF

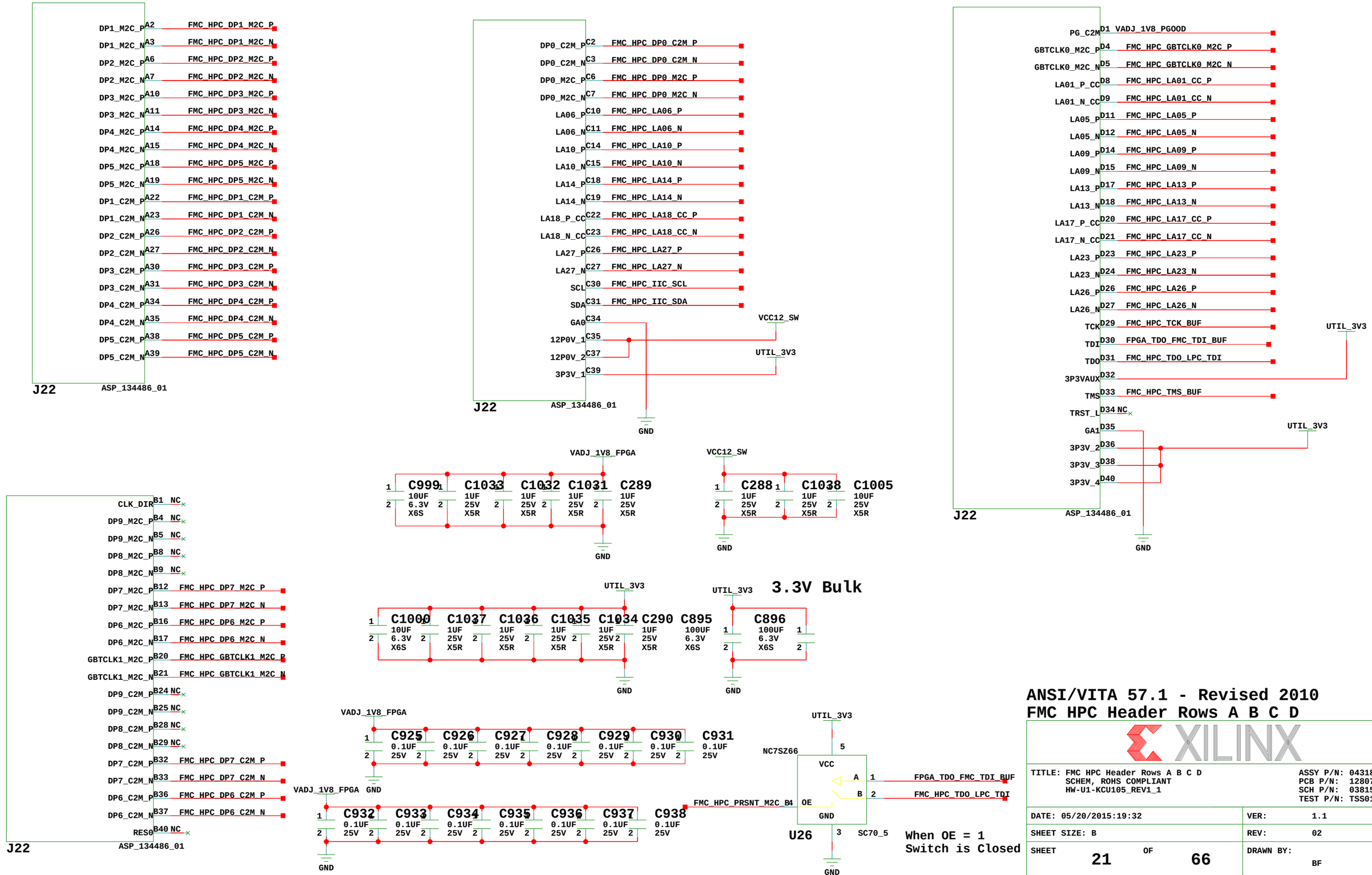
J22
ASP_134486_01
DP1_M2C_P A2 FMC_HPC_DP1_M2C_P
DP1_M2C_N A3 FMC_HPC_DP1_M2C_N
DP2_M2C_P A6 FMC_HPC_DP2_M2C_P
DP2_M2C_N A7 FMC_HPC_DP2_M2C_N
DP3_M2C_P A10 FMC_HPC_DP3_M2C_P
DP3_M2C_N A11 FMC_HPC_DP3_M2C_N
DP4_M2C_P A14 FMC_HPC_DP4_M2C_P
DP4_M2C_N A15 FMC_HPC_DP4_M2C_N
DP5_M2C_P A18 FMC_HPC_DP5_M2C_P
DP5_M2C_N A19 FMC_HPC_DP5_M2C_N
DP1_C2M_P A22 FMC_HPC_DP1_C2M_P
DP1_C2M_N A23 FMC_HPC_DP1_C2M_N
DP2_C2M_P A26 FMC_HPC_DP2_C2M_P
DP2_C2M_N A27 FMC_HPC_DP2_C2M_N
DP3_C2M_P A30 FMC_HPC_DP3_C2M_P
DP3_C2M_N A31 FMC_HPC_DP3_C2M_N
DP4_C2M_P A34 FMC_HPC_DP4_C2M_P
DP4_C2M_N A35 FMC_HPC_DP4_C2M_N
DP5_C2M_P A38 FMC_HPC_DP5_C2M_P
DP5_C2M_N A39 FMC_HPC_DP5_C2M_N
J22
ASP_134486_01
DP0_C2M_P C2 FMC_HPC_DP0_C2M_P
DP0_C2M_N C3 FMC_HPC_DP0_C2M_N
DP0_M2C_P C6 FMC_HPC_DP0_M2C_P
DP0_M2C_N C7 FMC_HPC_DP0_M2C_N
LA06_P C10 FMC_HPC_LA06_P
LA06_N C11 FMC_HPC_LA06_N
LA10_P C14 FMC_HPC_LA10_P
LA10_N C15 FMC_HPC_LA10_N
LA14_P C18 FMC_HPC_LA14_P
LA14_N C19 FMC_HPC_LA14_N
LA18_P_CC C22 FMC_HPC_LA18_CC_P
LA18_N_CC C23 FMC_HPC_LA18_CC_N
LA27_P C26 FMC_HPC_LA27_P
LA27_N C27 FMC_HPC_LA27_N
SCL C30 FMC_HPC_IIC_SCL
SDA C31 FMC_HPC_IIC_SDA
GA0 C34
12P0V_1 C35
12P0V_2 C37
3P3V_1 C39
VCC12_SW
UTIL_3V3
GND
J22
ASP_134486_01
PG_C2M D1 VADJ_1V8_PGOOD
GBTCLK0_M2C_P D4 FMC_HPC_GBTCLK0_M2C_P
GBTCLK0_M2C_N D5 FMC_HPC_GBTCLK0_M2C_N
LA01_P_CC D8 FMC_HPC_LA01_CC_P
LA01_N_CC D9 FMC_HPC_LA01_CC_N
LA05_P D11 FMC_HPC_LA05_P
LA05_N D12 FMC_HPC_LA05_N
LA09_P D14 FMC_HPC_LA09_P
LA09_N D15 FMC_HPC_LA09_N
LA13_P D17 FMC_HPC_LA13_P
LA13_N D18 FMC_HPC_LA13_N
LA17_P_CC D20 FMC_HPC_LA17_CC_P
LA17_N_CC D21 FMC_HPC_LA17_CC_N
LA23_P D23 FMC_HPC_LA23_P
LA23_N D24 FMC_HPC_LA23_N
LA26_P D26 FMC_HPC_LA26_P
LA26_N D27 FMC_HPC_LA26_N
TCK D29 FMC_HPC_TCK_BUF
TDI D30 FPGA_TDO_FMC_TDI_BUF
TDO D31 FMC_HPC_TDO_LPC_TDI
3P3VAUX D32
TMS D33 FMC_HPC_TMS_BUF
TRST_L D34 NC
GA1 D35
3P3V_2 D36
3P3V_3 D38
3P3V_4 D40
UTIL_3V3
UTIL_3V3
GND
J22
ASP_134486_01
CLK_DIR B1 NC
DP9_M2C_P B4 NC
DP9_M2C_N B5 NC
DP8_M2C_P B8 NC
DP8_M2C_N B9 NC
DP7_M2C_P B12 FMC_HPC_DP7_M2C_P
DP7_M2C_N B13 FMC_HPC_DP7_M2C_N
DP6_M2C_P B16 FMC_HPC_DP6_M2C_P
DP6_M2C_N B17 FMC_HPC_DP6_M2C_N
GBTCLK1_M2C_P B20 FMC_HPC_GBTCLK1_M2C_P
GBTCLK1_M2C_N B21 FMC_HPC_GBTCLK1_M2C_N
DP9_C2M_P B24 NC
DP9_C2M_N B25 NC
DP8_C2M_P B28 NC
DP8_C2M_N B29 NC
DP7_C2M_P B32 FMC_HPC_DP7_C2M_P
DP7_C2M_N B33 FMC_HPC_DP7_C2M_N
DP6_C2M_P B36 FMC_HPC_DP6_C2M_P
DP6_C2M_N B37 FMC_HPC_DP6_C2M_N
RES0 B40 NC
J22
ASP_134486_01
VADJ_1V8_FPGA
C999 10UF 6.3V X6S
C1033 1UF 25V X5R
C1032 1UF 25V X5R
C1031 1UF 25V X5R
C289 1UF 25V X5R
GND
VCC12_SW
C288 1UF 25V X5R
C1038 1UF 25V X5R
C1005 10UF 25V X5R
GND
UTIL_3V3
C1000 10UF 6.3V X6S
C1037 1UF 25V X5R
C1036 1UF 25V X5R
C1035 1UF 25V X5R
C1034 1UF 25V X5R
C290 1UF 25V X5R
C895 100UF 6.3V X6S
GND
UTIL_3V3
3.3V Bulk
C896 100UF 6.3V X6S
GND
VADJ_1V8_FPGA
C925 0.1UF 25V
C926 0.1UF 25V
C927 0.1UF 25V
C928 0.1UF 25V
C929 0.1UF 25V
C930 0.1UF 25V
C931 0.1UF 25V
VADJ_1V8_FPGA GND
C932 0.1UF 25V
C933 0.1UF 25V
C934 0.1UF 25V
C935 0.1UF 25V
C936 0.1UF 25V
C937 0.1UF 25V
C938 0.1UF 25V
GND
UTIL_3V3
NC7SZ66
VCC
A
B
OE
GND
FMC_HPC_PRSNT_M2C_B4
FPGA_TDO_FMC_TDI_BUF
FMC_HPC_TDO_LPC_TDI
U26
SC70_5
GND
When OE = 1
Switch is Closed
ANSI/VITA 57.1 - Revised 2010
FMC HPC Header Rows A B C D
XILINX
TITLE: FMC HPC Header Rows A B C D
SCHEM, ROHS COMPLIANT
HW-U1-KCU105_REV1_1
ASSY P/N: 0431811
PCB P/N: 1280723
SCH P/N: 0381556
TEST P/N: TSS0165
DATE: 05/20/2015:19:32
VER: 1.1
SHEET SIZE: B
REV: 02
SHEET 21 OF 66
DRAWN BY: BF

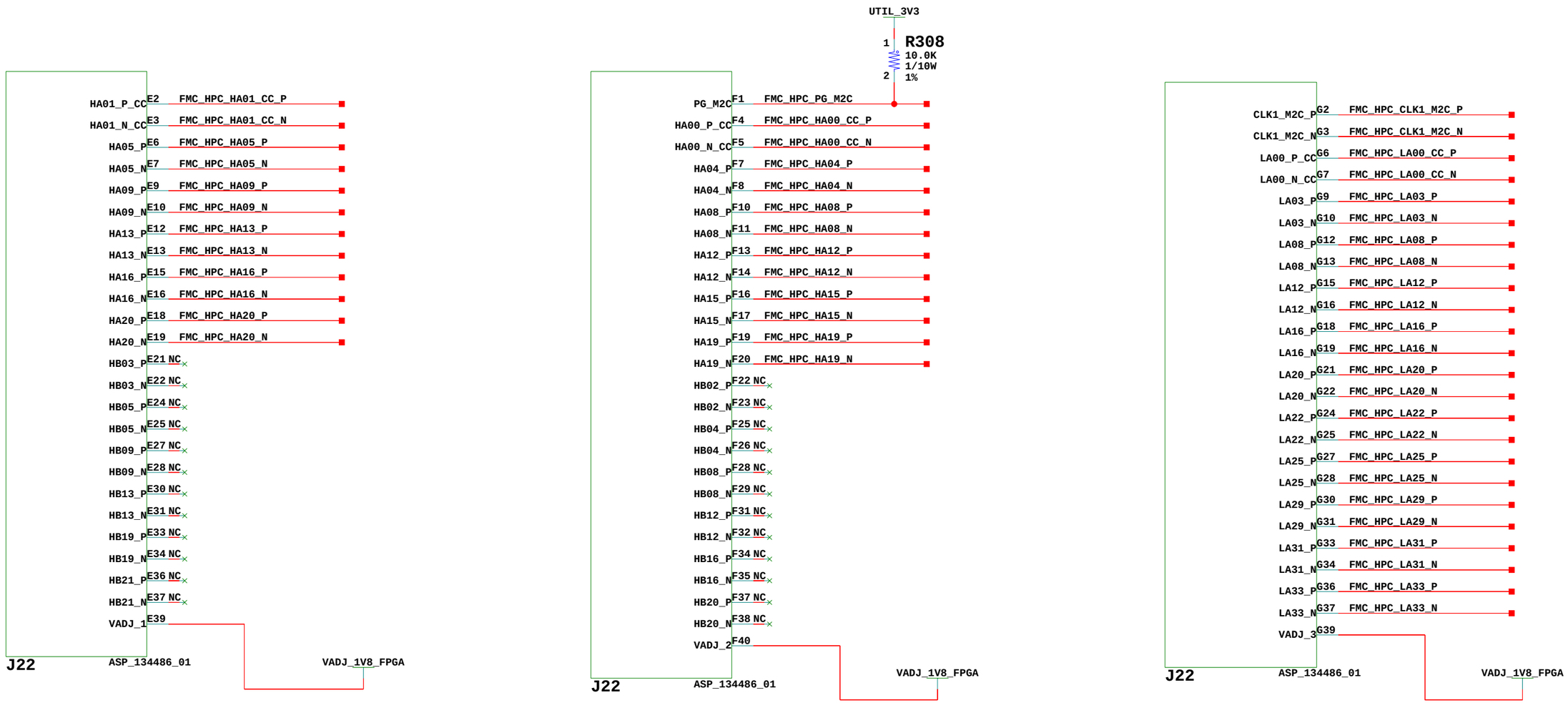

ANSI/VITA 57.1 - Revised 2010
FMC HPC Header Rows E F G

XILINX

TITLE: FMC HPC Header Rows E F G SCHEM, ROHS COMPLIANT HW-U1-KCU105_REV1_1	ASSY P/N: 0431811 PCB P/N: 1280723 SCH P/N: 0381556 TEST P/N: TSS0165
DATE: 05/20/2015:19:32	VER: 1.1
SHEET SIZE: B	REV: 02
SHEET 22 OF 66	DRAWN BY: BF

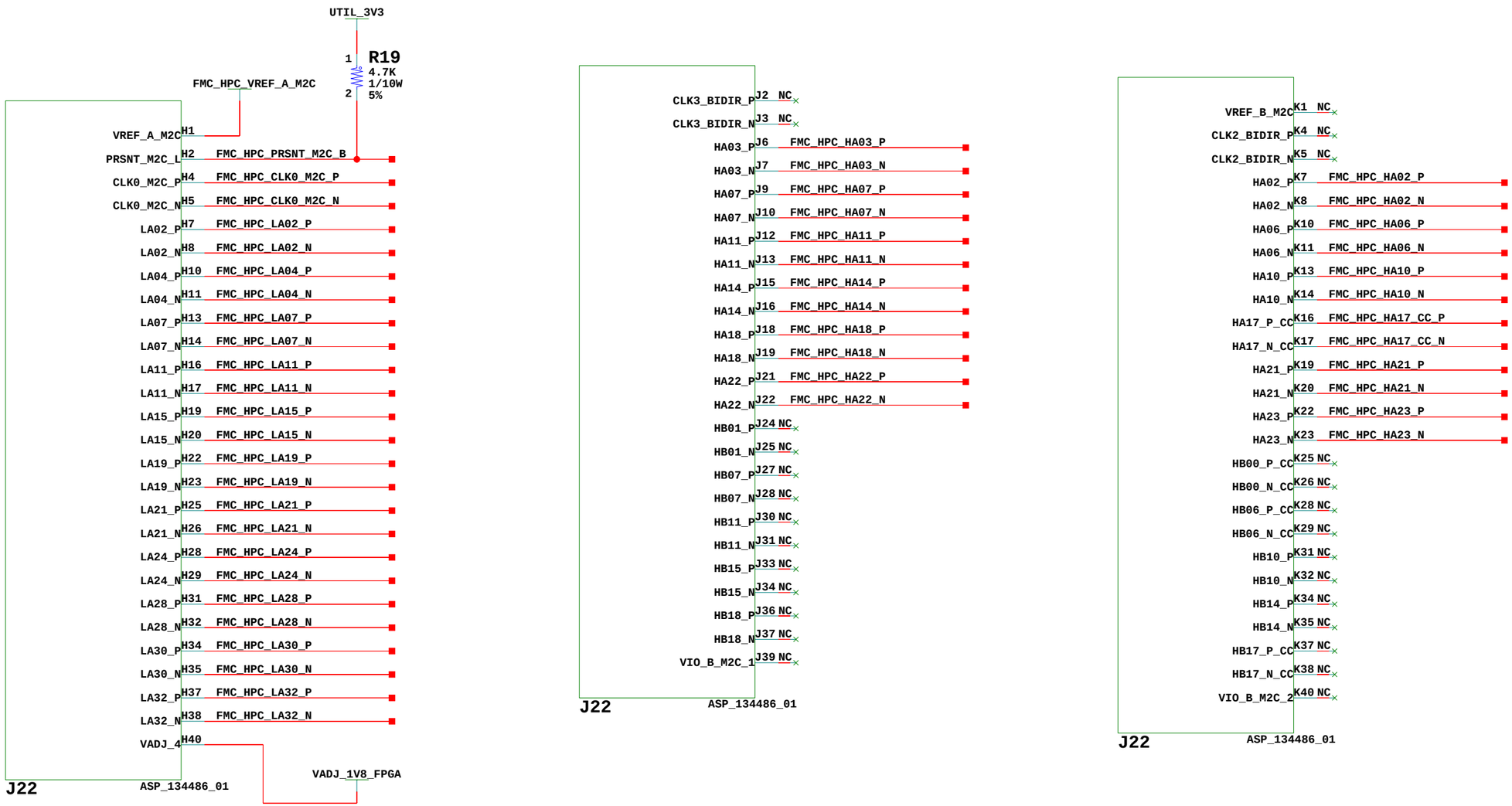

ANSI/VITA 57.1 - Revised 2010
FMC HPC Header Rows H J K

XILINX

TITLE: FMC HPC Header Rows H J K SCHEM, ROHS COMPLIANT HW-U1-KCU105_REV1_1	ASSY P/N: 0431811 PCB P/N: 1280723 SCH P/N: 0381556 TEST P/N: TSS0165
DATE: 05/20/2015:19:32	VER: 1.1
SHEET SIZE: B	REV: 02
SHEET 23 OF 66	DRAWN BY: BF

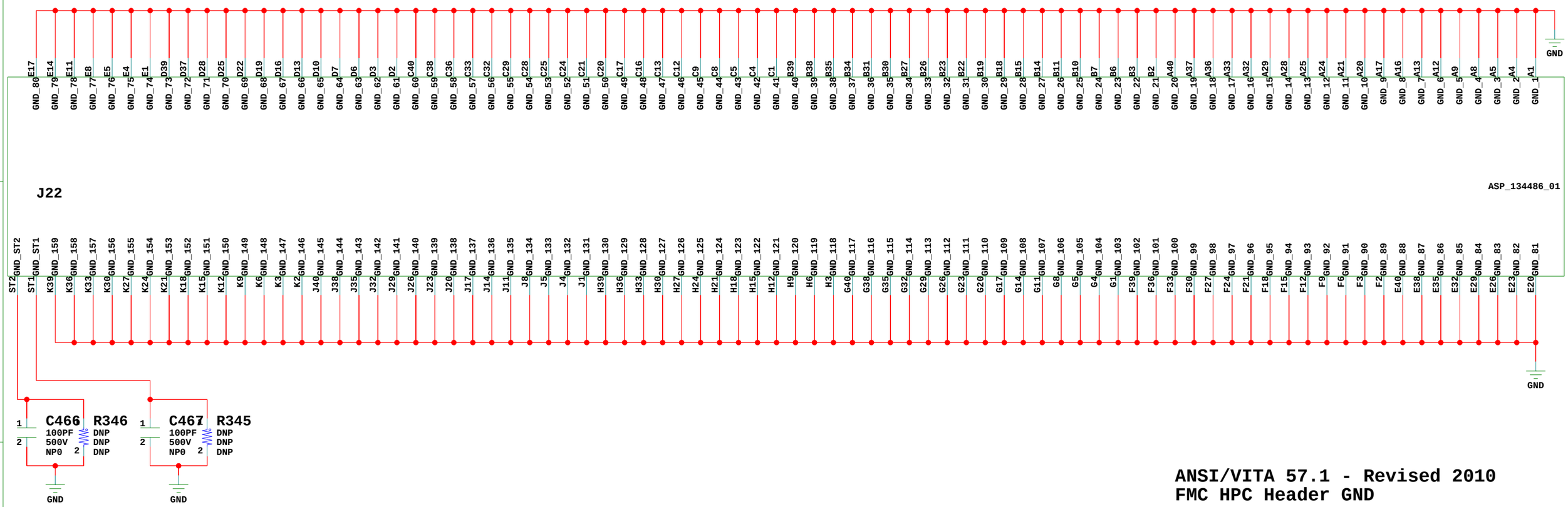

ANSI/VITA 57.1 - Revised 2010
FMC HPC Header GND

XILINX

TITLE: FMC HPC Header GND SCHEM, ROHS COMPLIANT HW-U1-KCU105_REV1_1	ASSY P/N: 0431811 PCB P/N: 1280723 SCH P/N: 0381556 TEST P/N: TSS0165
DATE: 05/20/2015:19:32	VER: 1.1
SHEET SIZE: B	REV: 02
SHEET 24 OF 66	DRAWN BY: BF

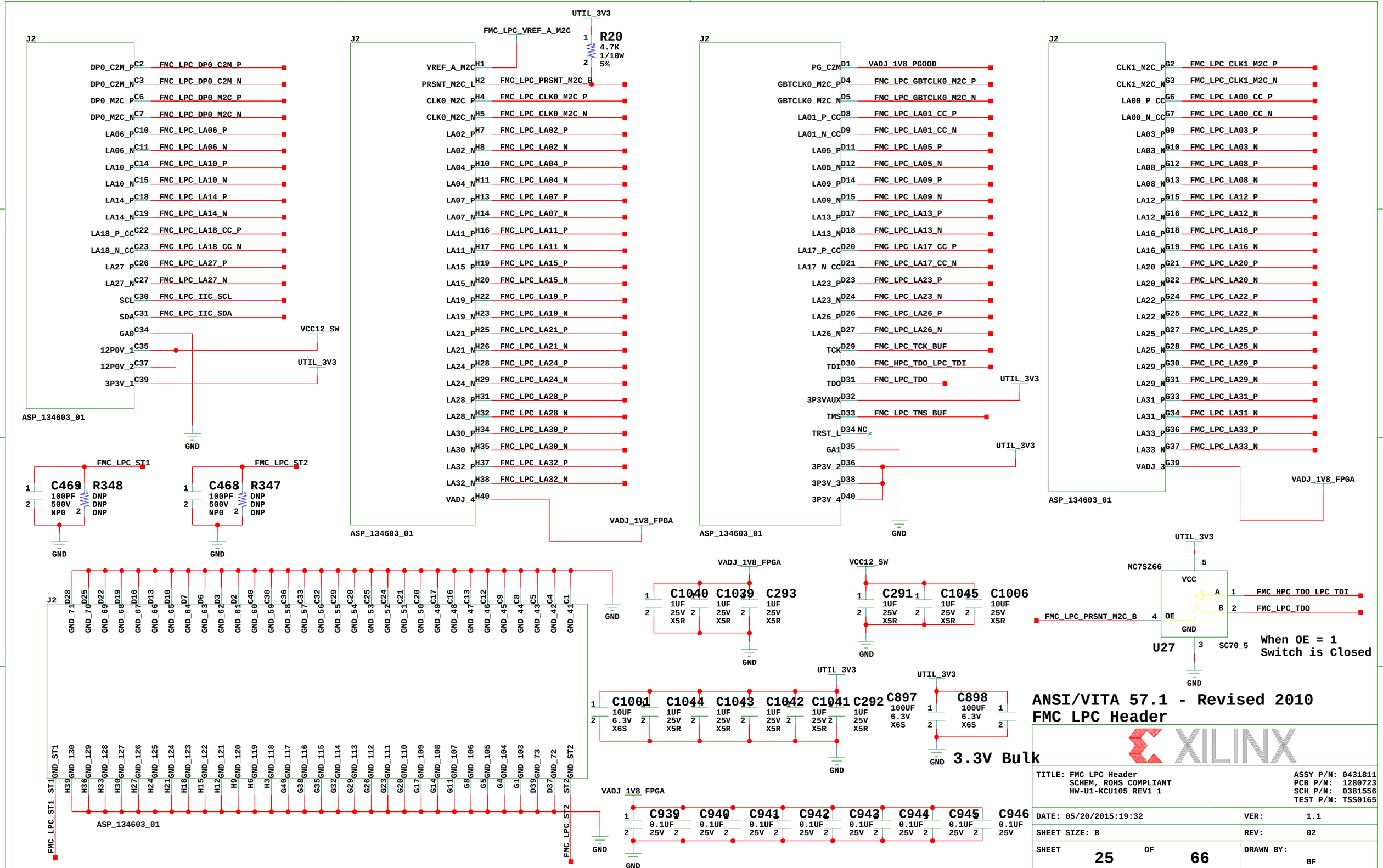
J2
DP0_C2M_P C2 FMC_LPC_DP0_C2M_P
DP0_C2M_N C3 FMC_LPC_DP0_C2M_N
DP0_M2C_P C6 FMC_LPC_DP0_M2C_P
DP0_M2C_N C7 FMC_LPC_DP0_M2C_N
LA06_P C10 FMC_LPC_LA06_P
LA06_N C11 FMC_LPC_LA06_N
LA10_P C14 FMC_LPC_LA10_P
LA10_N C15 FMC_LPC_LA10_N
LA14_P C18 FMC_LPC_LA14_P
LA14_N C19 FMC_LPC_LA14_N
LA18_P_CC C22 FMC_LPC_LA18_CC_P
LA18_N_CC C23 FMC_LPC_LA18_CC_N
LA27_P C26 FMC_LPC_LA27_P
LA27_N C27 FMC_LPC_LA27_N
SCL C30 FMC_LPC_IIC_SCL
SDA C31 FMC_LPC_IIC_SDA
GA0 C34
12P0V_1 C35
12P0V_2 C37
3P3V_1 C39
VCC12_SW
UTIL_3V3
ASP_134603_01
GND
FMC_LPC_ST1
C469 100PF 500V NP0
R348 DNP DNP DNP
FMC_LPC_ST2
C468 100PF 500V NP0
R347 DNP DNP DNP
UTIL_3V3
R20 4.7K 1/10W 5%
FMC_LPC_VREF_A_M2C
VREF_A_M2C H1
PRSNT_M2C_L H2 FMC_LPC_PRSNT_M2C_B
CLK0_M2C_P H4 FMC_LPC_CLK0_M2C_P
CLK0_M2C_N H5 FMC_LPC_CLK0_M2C_N
LA02_P H7 FMC_LPC_LA02_P
LA02_N H8 FMC_LPC_LA02_N
LA04_P H10 FMC_LPC_LA04_P
LA04_N H11 FMC_LPC_LA04_N
LA07_P H13 FMC_LPC_LA07_P
LA07_N H14 FMC_LPC_LA07_N
LA11_P H16 FMC_LPC_LA11_P
LA11_N H17 FMC_LPC_LA11_N
LA15_P H19 FMC_LPC_LA15_P
LA15_N H20 FMC_LPC_LA15_N
LA19_P H22 FMC_LPC_LA19_P
LA19_N H23 FMC_LPC_LA19_N
LA21_P H25 FMC_LPC_LA21_P
LA21_N H26 FMC_LPC_LA21_N
LA24_P H28 FMC_LPC_LA24_P
LA24_N H29 FMC_LPC_LA24_N
LA28_P H31 FMC_LPC_LA28_P
LA28_N H32 FMC_LPC_LA28_N
LA30_P H34 FMC_LPC_LA30_P
LA30_N H35 FMC_LPC_LA30_N
LA32_P H37 FMC_LPC_LA32_P
LA32_N H38 FMC_LPC_LA32_N
VADJ_4 H40
VADJ_1V8_FPGA
PG_C2M D1 VADJ_1V8_PGOOD
GBTCLK0_M2C_P D4 FMC_LPC_GBTCLK0_M2C_P
GBTCLK0_M2C_N D5 FMC_LPC_GBTCLK0_M2C_N
LA01_P_CC D8 FMC_LPC_LA01_CC_P
LA01_N_CC D9 FMC_LPC_LA01_CC_N
LA05_P D11 FMC_LPC_LA05_P
LA05_N D12 FMC_LPC_LA05_N
LA09_P D14 FMC_LPC_LA09_P
LA09_N D15 FMC_LPC_LA09_N
LA13_P D17 FMC_LPC_LA13_P
LA13_N D18 FMC_LPC_LA13_N
LA17_P_CC D20 FMC_LPC_LA17_CC_P
LA17_N_CC D21 FMC_LPC_LA17_CC_N
LA23_P D23 FMC_LPC_LA23_P
LA23_N D24 FMC_LPC_LA23_N
LA26_P D26 FMC_LPC_LA26_P
LA26_N D27 FMC_LPC_LA26_N
TCK D29 FMC_LPC_TCK_BUF
TDI D30 FMC_HPC_TDO_LPC_TDI
TDO D31 FMC_LPC_TDO
3P3VAUX D32
TMS D33 FMC_LPC_TMS_BUF
TRST_L D34 NC
GA1 D35
3P3V_2 D36
3P3V_3 D38
3P3V_4 D40
CLK1_M2C_P G2 FMC_LPC_CLK1_M2C_P
CLK1_M2C_N G3 FMC_LPC_CLK1_M2C_N
LA00_P_CC G6 FMC_LPC_LA00_CC_P
LA00_N_CC G7 FMC_LPC_LA00_CC_N
LA03_P G9 FMC_LPC_LA03_P
LA03_N G10 FMC_LPC_LA03_N
LA08_P G12 FMC_LPC_LA08_P
LA08_N G13 FMC_LPC_LA08_N
LA12_P G15 FMC_LPC_LA12_P
LA12_N G16 FMC_LPC_LA12_N
LA16_P G18 FMC_LPC_LA16_P
LA16_N G19 FMC_LPC_LA16_N
LA20_P G21 FMC_LPC_LA20_P
LA20_N G22 FMC_LPC_LA20_N
LA22_P G24 FMC_LPC_LA22_P
LA22_N G25 FMC_LPC_LA22_N
LA25_P G27 FMC_LPC_LA25_P
LA25_N G28 FMC_LPC_LA25_N
LA29_P G30 FMC_LPC_LA29_P
LA29_N G31 FMC_LPC_LA29_N
LA31_P G33 FMC_LPC_LA31_P
LA31_N G34 FMC_LPC_LA31_N
LA33_P G36 FMC_LPC_LA33_P
LA33_N G37 FMC_LPC_LA33_N
VADJ_3 G39
VADJ_1V8_FPGA
GND_71 D28 GND_70 D25 GND_69 D22 GND_68 D19 GND_67 D16 GND_66 D13 GND_65 D10 GND_64 D7 GND_63 D6 GND_62 D3 GND_61 D2 GND_60 C40 GND_59 C38 GND_58 C36 GND_57 C33 GND_56 C32 GND_55 C29 GND_54 C28 GND_53 C25 GND_52 C24 GND_51 C21 GND_50 C20 GND_49 C17 GND_48 C16 GND_47 C13 GND_46 C12 GND_45 C9 GND_44 C8 GND_43 C5 GND_42 C4 GND_41 C1
GND_ST1 H39 GND_130 H36 GND_129 H33 GND_128 H30 GND_127 H27 GND_126 H24 GND_125 H21 GND_124 H18 GND_123 H15 GND_122 H12 GND_121 H9 GND_120 H6 GND_119 H3 GND_118 G40 GND_117 G38 GND_116 G35 GND_115 G32 GND_114 G29 GND_113 G26 GND_112 G23 GND_111 G20 GND_110 G17 GND_109 G14 GND_108 G11 GND_107 G8 GND_106 G5 GND_105 G4 GND_104 G1 GND_103 D39 GND_73 D37 GND_72 GND_ST2
FMC_LPC_ST1
FMC_LPC_ST2
C1040 1UF 25V X5R
C1039 1UF 25V X5R
C293 1UF 25V X5R
C291 1UF 25V X5R
C1045 1UF 25V X5R
C1006 10UF 25V X5R
UTIL_3V3
NC7SZ66
VCC
OE
GND
A
B
FMC_HPC_TDO_LPC_TDI
FMC_LPC_TDO
FMC_LPC_PRSNT_M2C_B
U27
SC70_5
When OE = 1
Switch is Closed
C1001 10UF 6.3V X6S
C1044 1UF 25V X5R
C1043 1UF 25V X5R
C1042 1UF 25V X5R
C1041 1UF 25V X5R
C292 1UF 25V X5R
C897 100UF 6.3V X6S
C898 100UF 6.3V X6S
3.3V Bulk
C939 0.1UF 25V
C940 0.1UF 25V
C941 0.1UF 25V
C942 0.1UF 25V
C943 0.1UF 25V
C944 0.1UF 25V
C945 0.1UF 25V
C946 0.1UF 25V
ANSI/VITA 57.1 - Revised 2010
FMC LPC Header
XILINX
TITLE: FMC LPC Header
SCHEM, ROHS COMPLIANT
HW-U1-KCU105_REV1_1
ASSY P/N: 0431811
PCB P/N: 1280723
SCH P/N: 0381556
TEST P/N: TSS0165
DATE: 05/20/2015:19:32
VER: 1.1
SHEET SIZE: B
REV: 02
SHEET 25 OF 66
DRAWN BY: BF

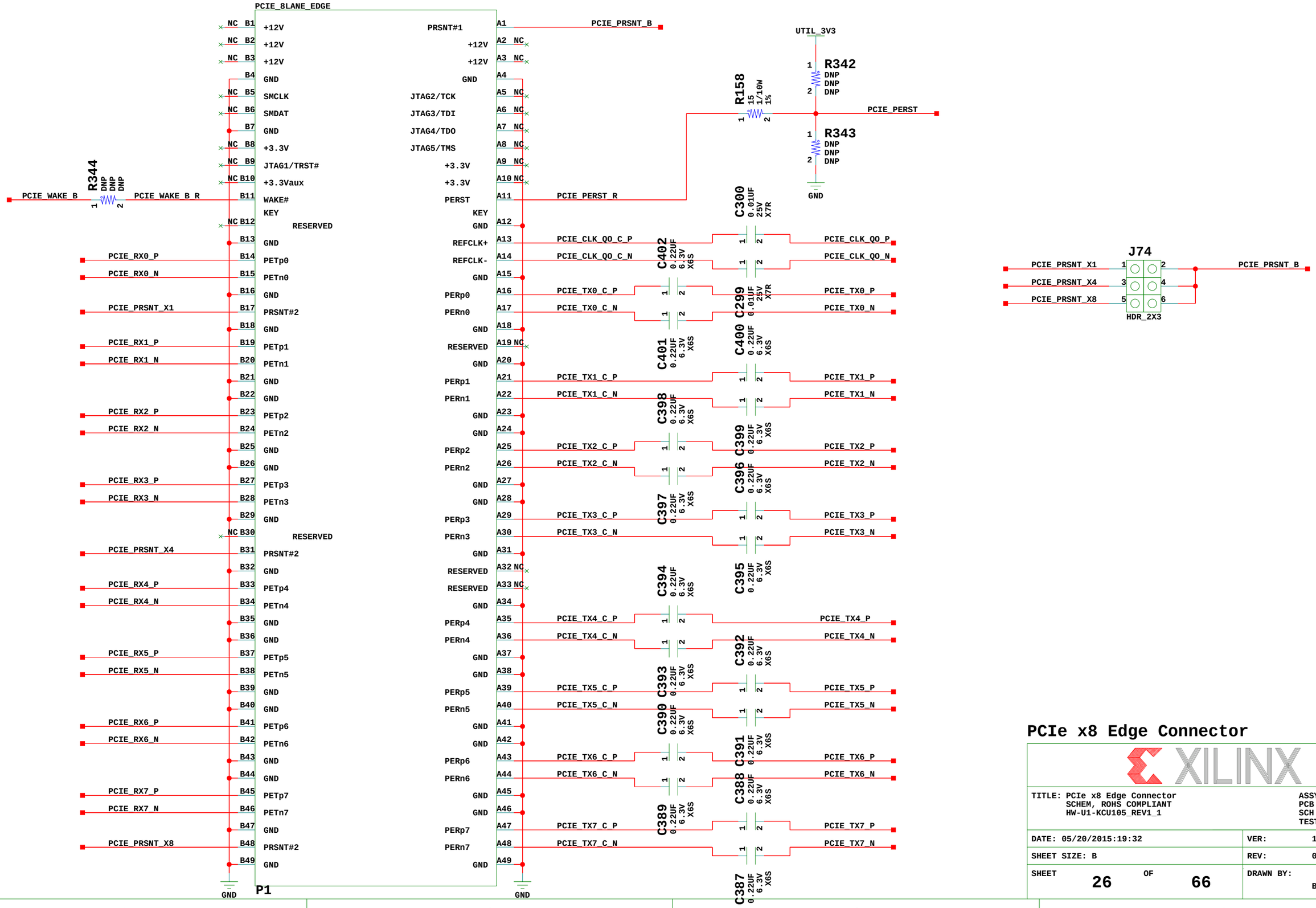

PCIe x8 Edge Connector

XILINX

TITLE: PCIe x8 Edge Connector SCHEM, ROHS COMPLIANT HW-U1-KCU105_REV1_1	ASSY P/N: 0431811 PCB P/N: 1280723 SCH P/N: 0381556 TEST P/N: TSS0165
DATE: 05/20/2015:19:32	VER: 1.1
SHEET SIZE: B	REV: 02
SHEET 26 OF 66	DRAWN BY: BF

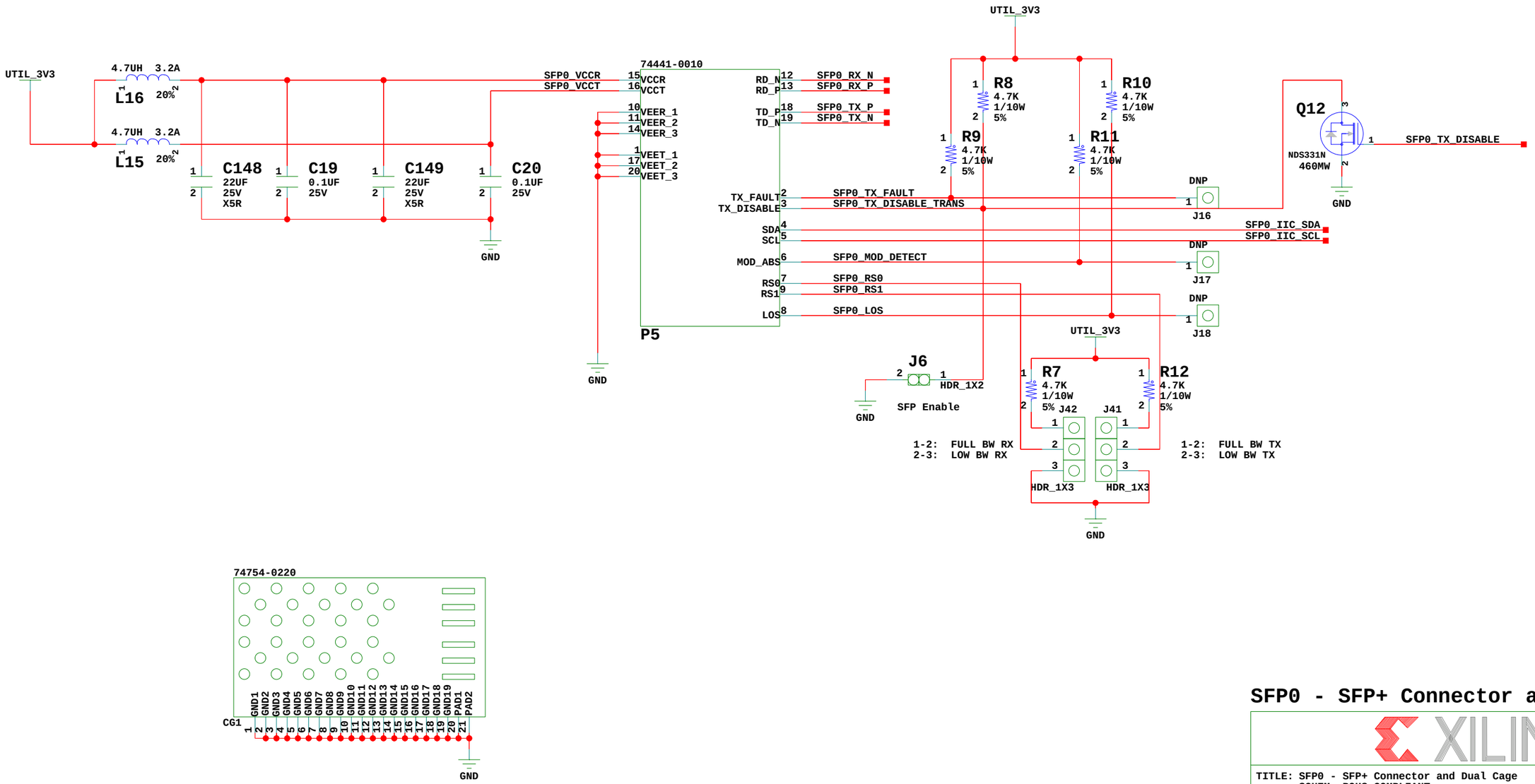

SFP0 - SFP+ Connector and Dual Cage

XILINX

TITLE: SFP0 - SFP+ Connector and Dual Cage SCHEM, ROHS COMPLIANT HW-U1-KCU105_REV1_1	ASSY P/N: 0431811 PCB P/N: 1280723 SCH P/N: 0381556 TEST P/N: TSS0165
DATE: 05/20/2015:19:32	VER: 1.1
SHEET SIZE: B	REV: 02
SHEET 27 OF 66	DRAWN BY: BF

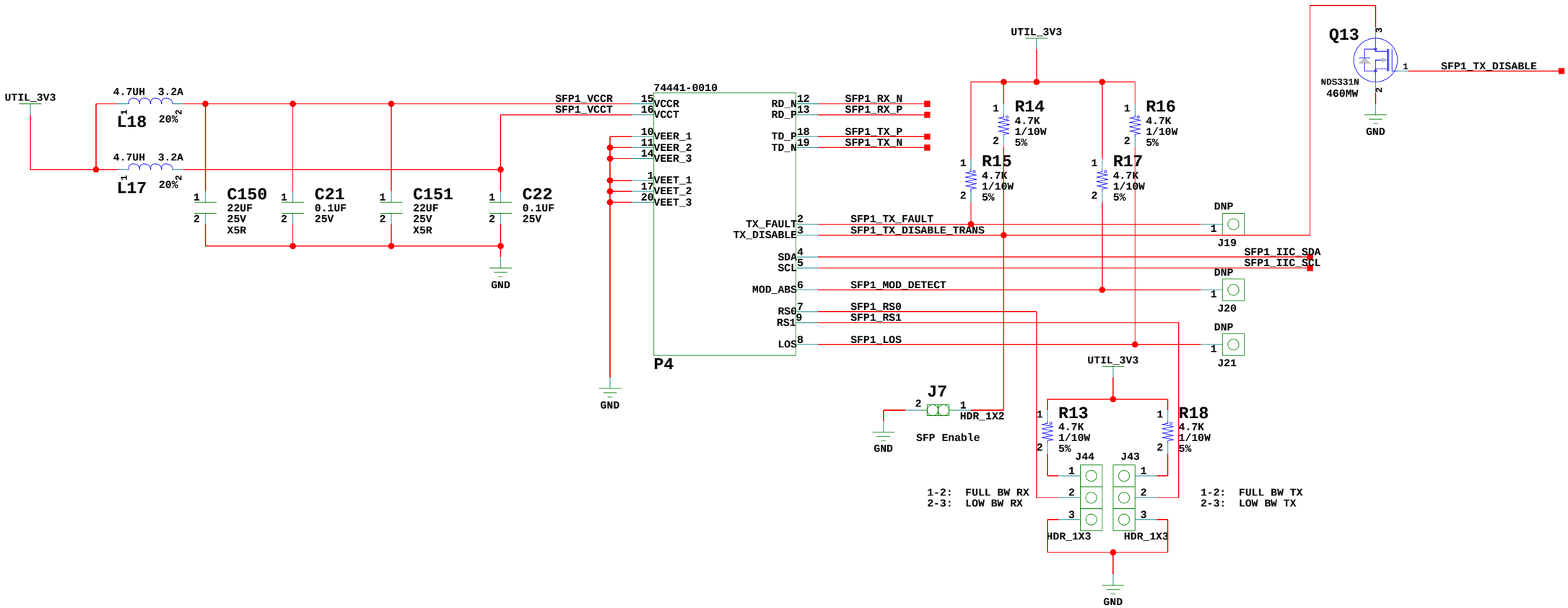

SFP1 - SFP+ Connector

XILINX

TITLE: SFP1 - SFP+ Connector SCHEM, ROHS COMPLIANT HW-U1-KCU105_REV1_1	ASSY P/N: 0431811 PCB P/N: 1280723 SCH P/N: 0381556 TEST P/N: TSS0165
DATE: 05/20/2015:19:32	VER: 1.1
SHEET SIZE: B	REV: 02
SHEET 28 OF 66	DRAWN BY: BF

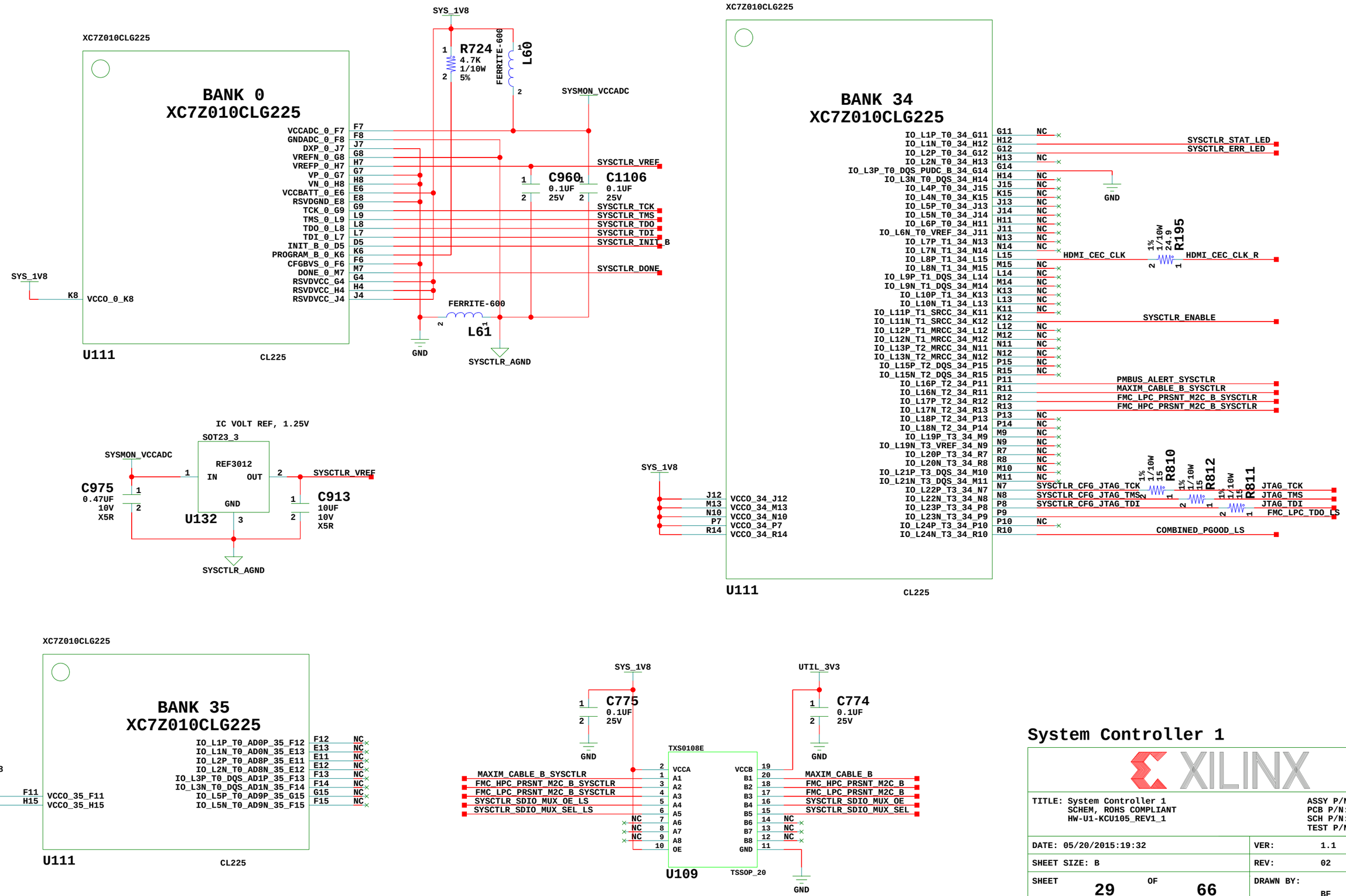

System Controller 1

XILINX

TITLE: System Controller 1 SCHEM, ROHS COMPLIANT HW-U1-KCU105_REV1_1	ASSY P/N: 0431811 PCB P/N: 1280723 SCH P/N: 0381556 TEST P/N: TSS0165
DATE: 05/20/2015:19:32	VER: 1.1
SHEET SIZE: B	REV: 02
SHEET 29 OF 66	DRAWN BY: BF

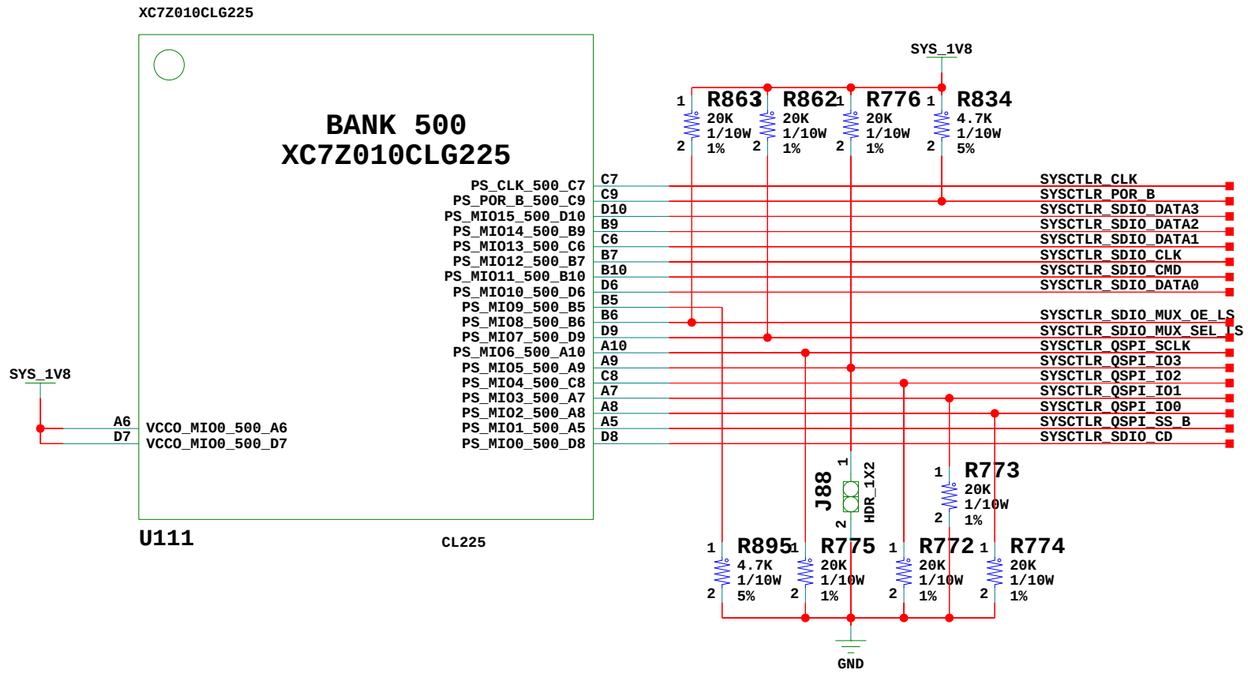

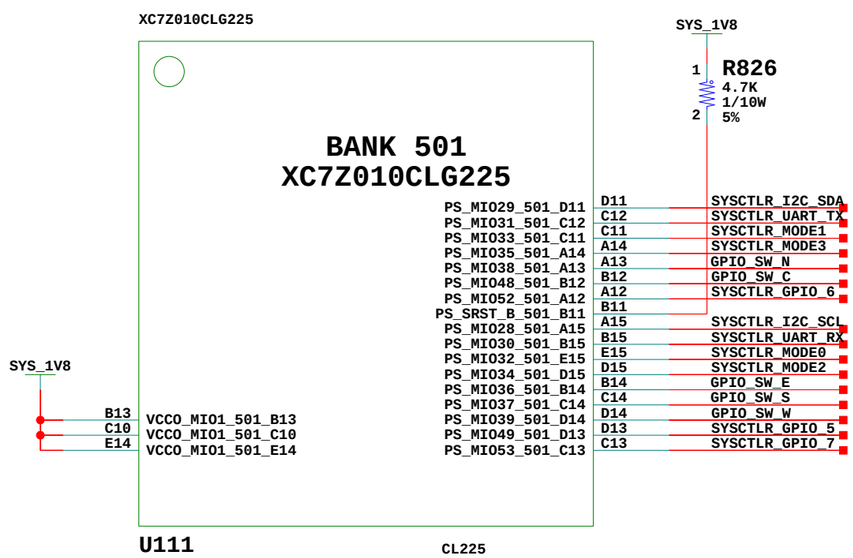

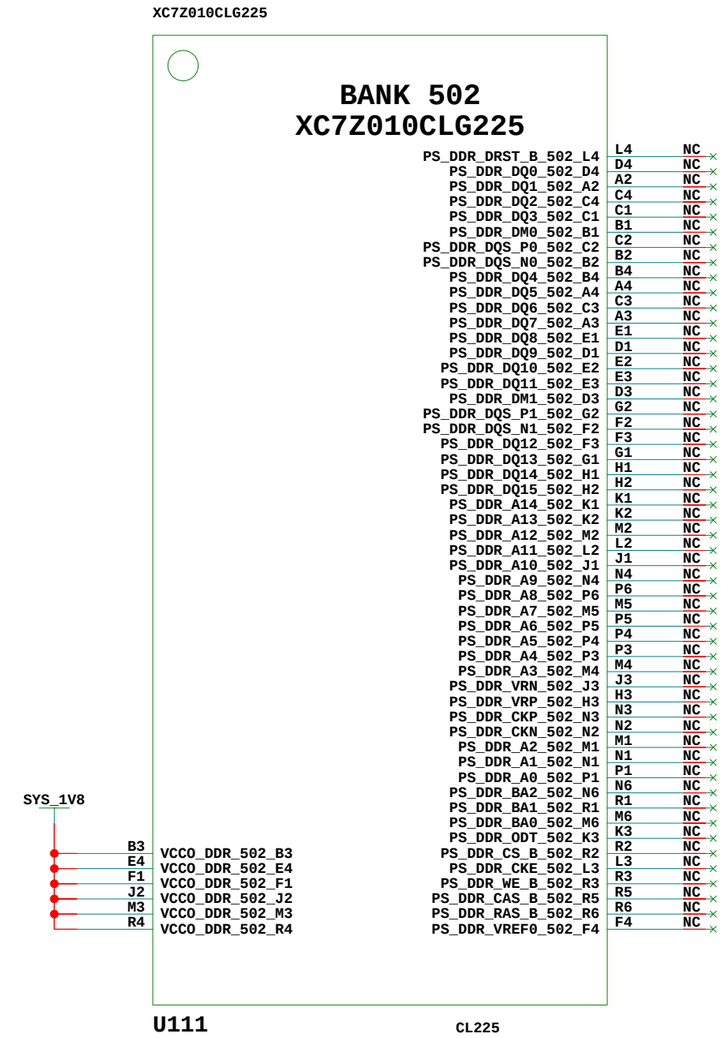

System Controller 2

XILINX

TITLE: System Controller 2 SCHEM, ROHS COMPLIANT HW-U1-KCU105_REV1_1	ASSY P/N: 0431811 PCB P/N: 1280723 SCH P/N: 0381556 TEST P/N: TSS0165
DATE: 05/20/2015:19:32	VER: 1.1
SHEET SIZE: B	REV: 02
SHEET 30 OF 66	DRAWN BY: BF

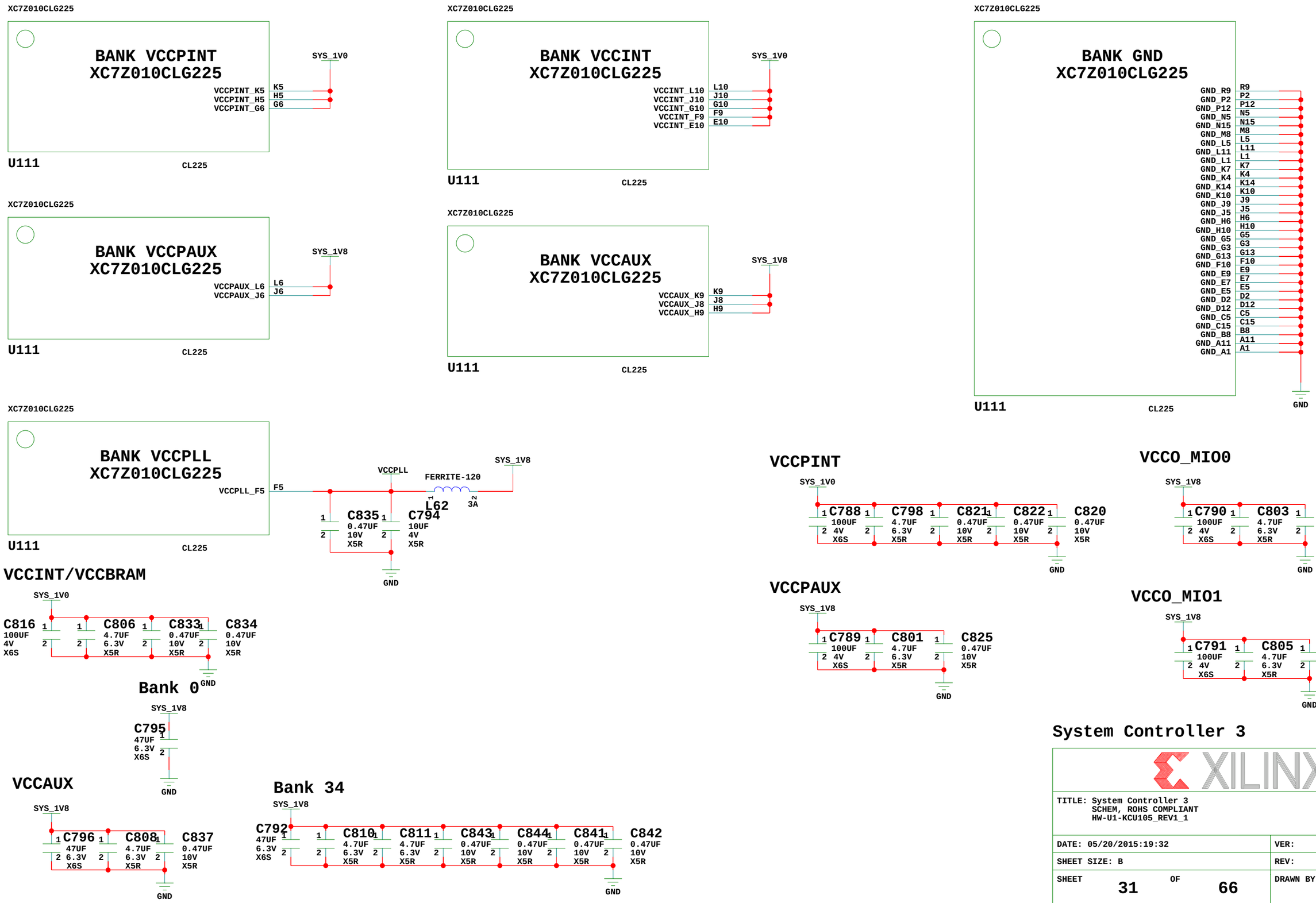

System Controller 3

XILINX

TITLE: System Controller 3 SCHEM, ROHS COMPLIANT HW-U1-KCU105_REV1_1	ASSY P/N: 0431811 PCB P/N: 1280723 SCH P/N: 0381556 TEST P/N: TSS0165
DATE: 05/20/2015:19:32	VER: 1.1
SHEET SIZE: B	REV: 02
SHEET 31 OF 66	DRAWN BY: BF

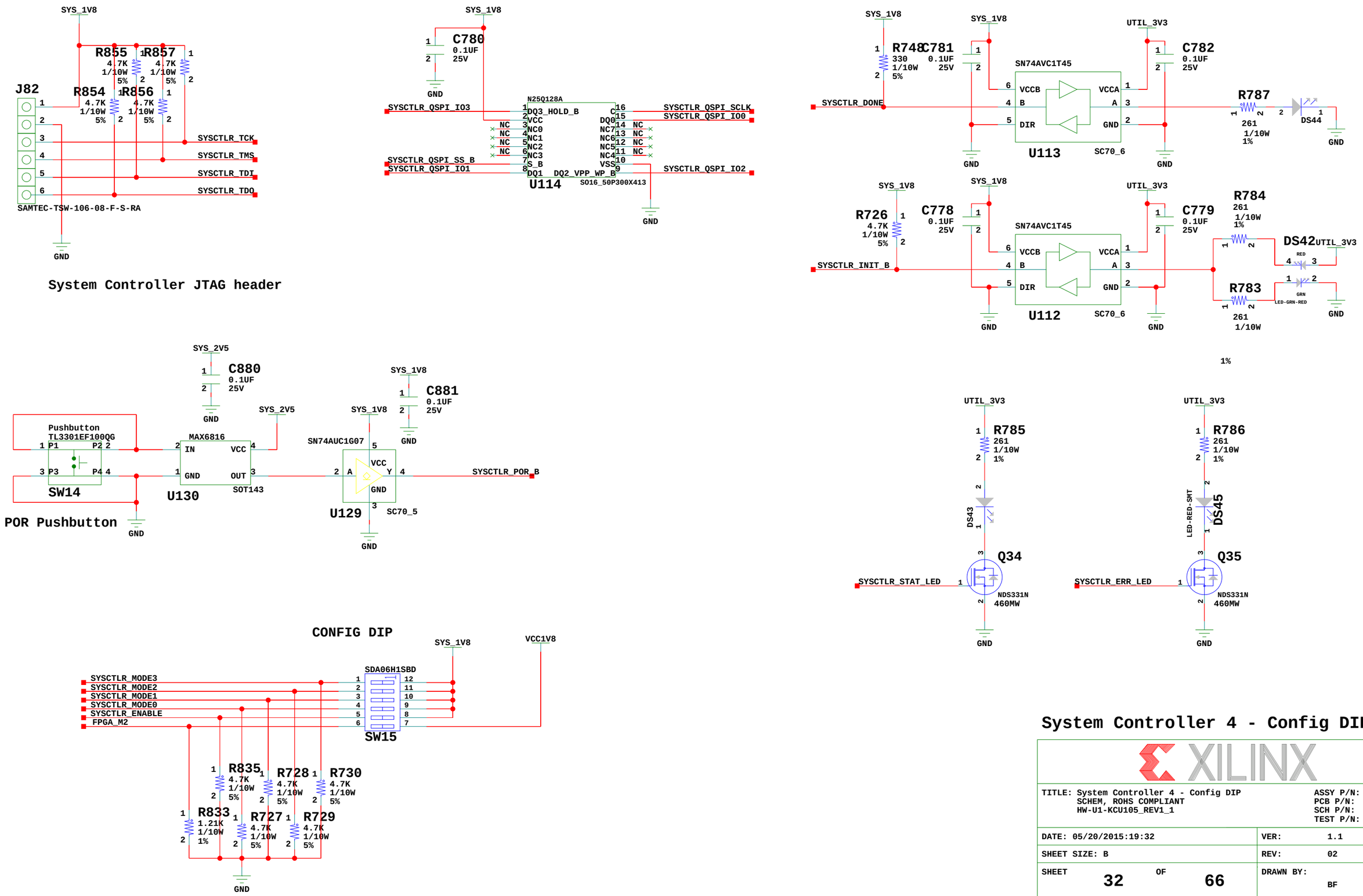

System Controller 4 - Config DIP

XILINX

TITLE: System Controller 4 - Config DIP SCHEM, ROHS COMPLIANT HW-U1-KCU105_REV1_1	ASSY P/N: 0431811 PCB P/N: 1280723 SCH P/N: 0381556 TEST P/N: TSS0165
DATE: 05/20/2015:19:32	VER: 1.1
SHEET SIZE: B	REV: 02
SHEET 32 OF 66	DRAWN BY: BF

SD MUX

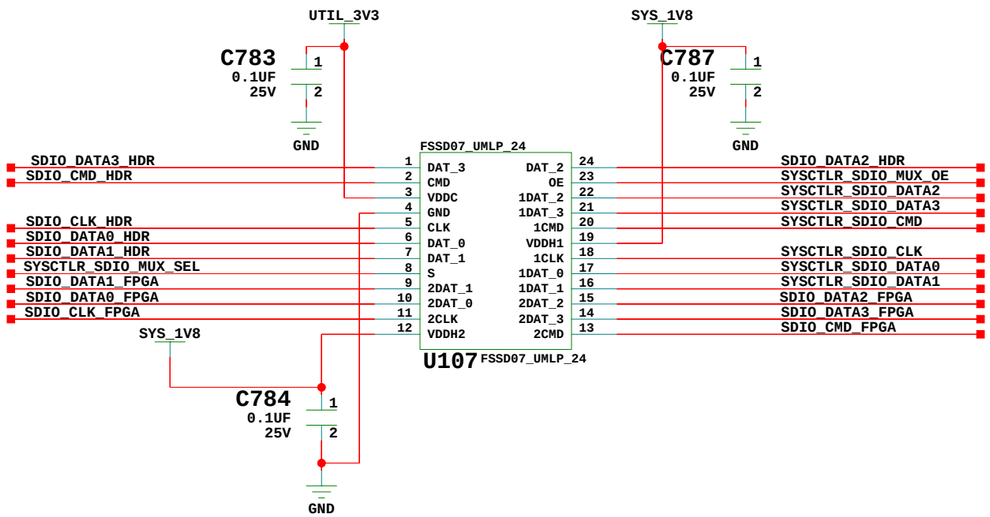

Micro SD CONNECTOR

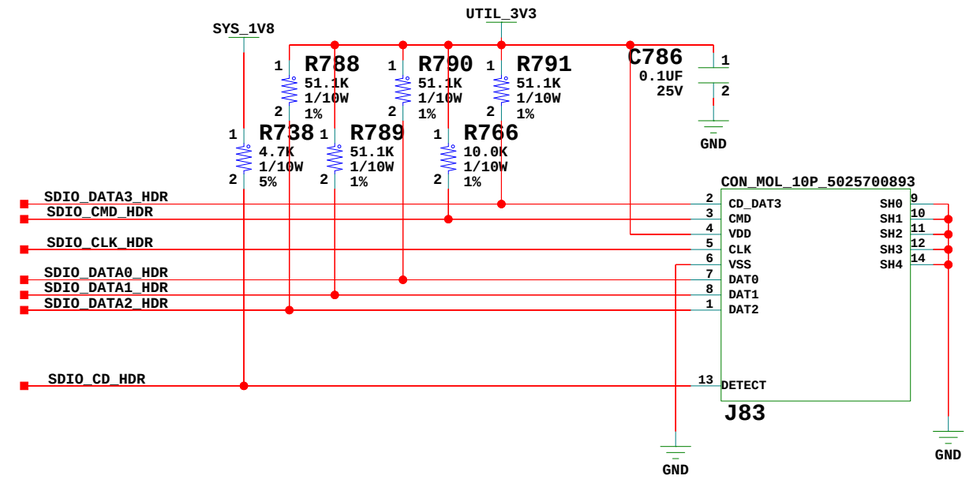

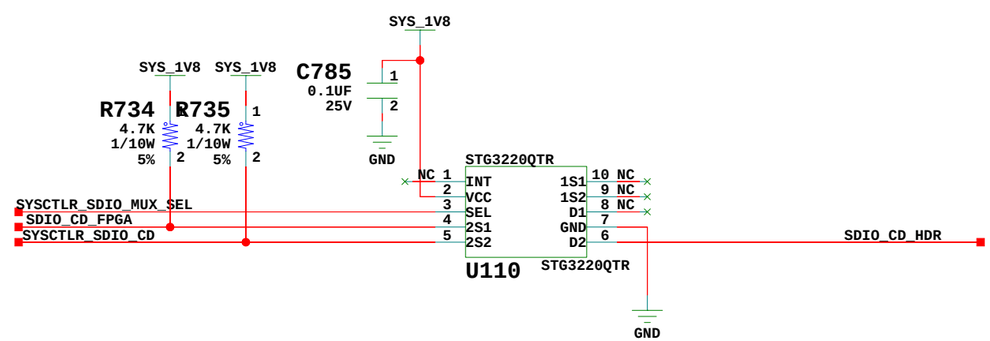

System Controller 5

XILINX

TITLE: System Controller 5 SCHEM, ROHS COMPLIANT HW-U1-KCU105_REV1_1	ASSY P/N: 0431811 PCB P/N: 1280723 SCH P/N: 0381556 TEST P/N: TSS0165
DATE: 05/20/2015:19:32	VER: 1.1
SHEET SIZE: B	REV: 02
SHEET 33 OF 66	DRAWN BY: BF

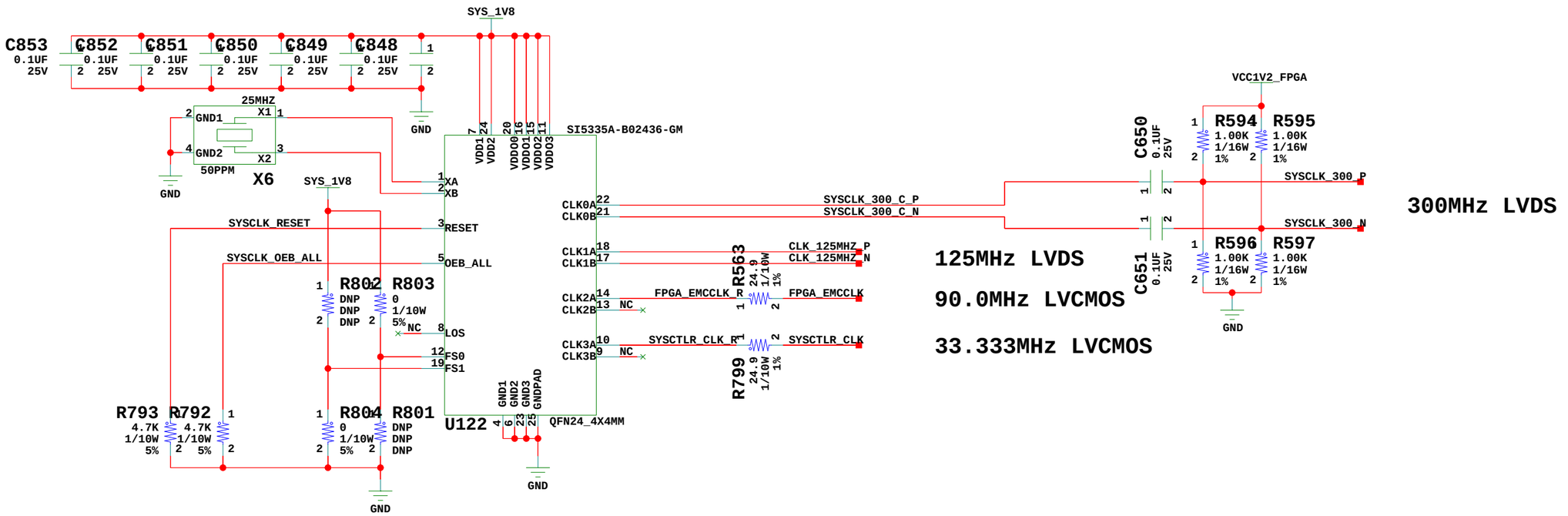

EMCCLK and System Clocks

XILINX

TITLE: EMCCLK and System Clocks SCHEM, ROHS COMPLIANT HW-U1-KCU105_REV1_1	ASSY P/N: 0431811 PCB P/N: 1280723 SCH P/N: 0381556 TEST P/N: TSS0165
DATE: 05/20/2015:19:32	VER: 1.1
SHEET SIZE: B	REV: 02
SHEET 34 OF 66	DRAWN BY: BF

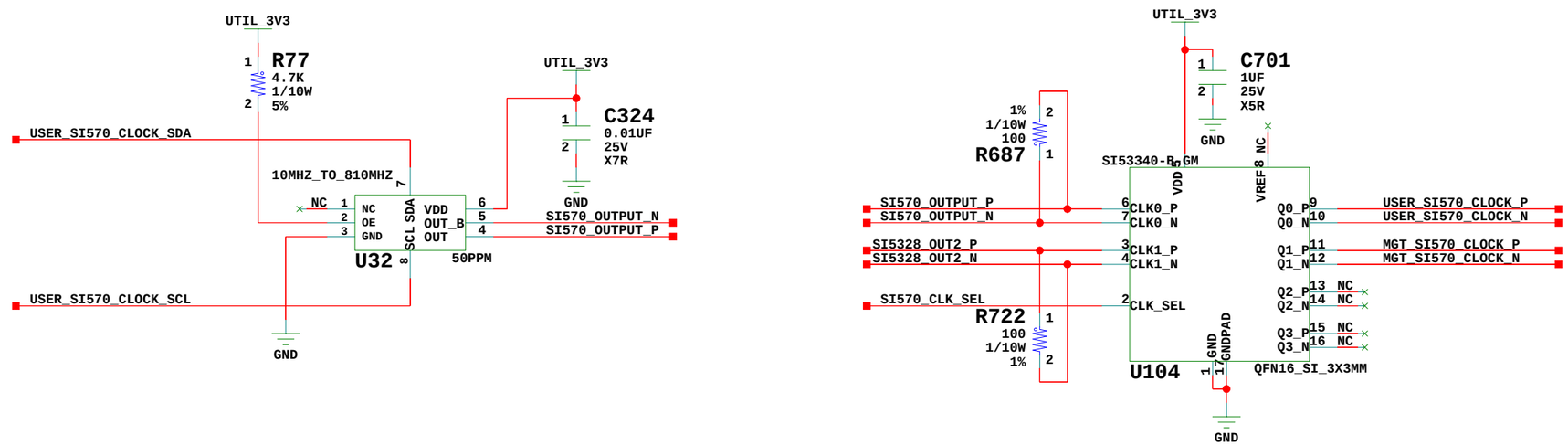

Programmable Clocks and Buffer

XILINX

TITLE: Programmable Clocks and Buffer SCHEM, ROHS COMPLIANT HW-U1-KCU105_REV1_1	ASSY P/N: 0431811 PCB P/N: 1280723 SCH P/N: 0381556 TEST P/N: TSS0165
DATE: 05/20/2015:19:32	VER: 1.1
SHEET SIZE: B	REV: 02
SHEET 35 OF 66	DRAWN BY: BF

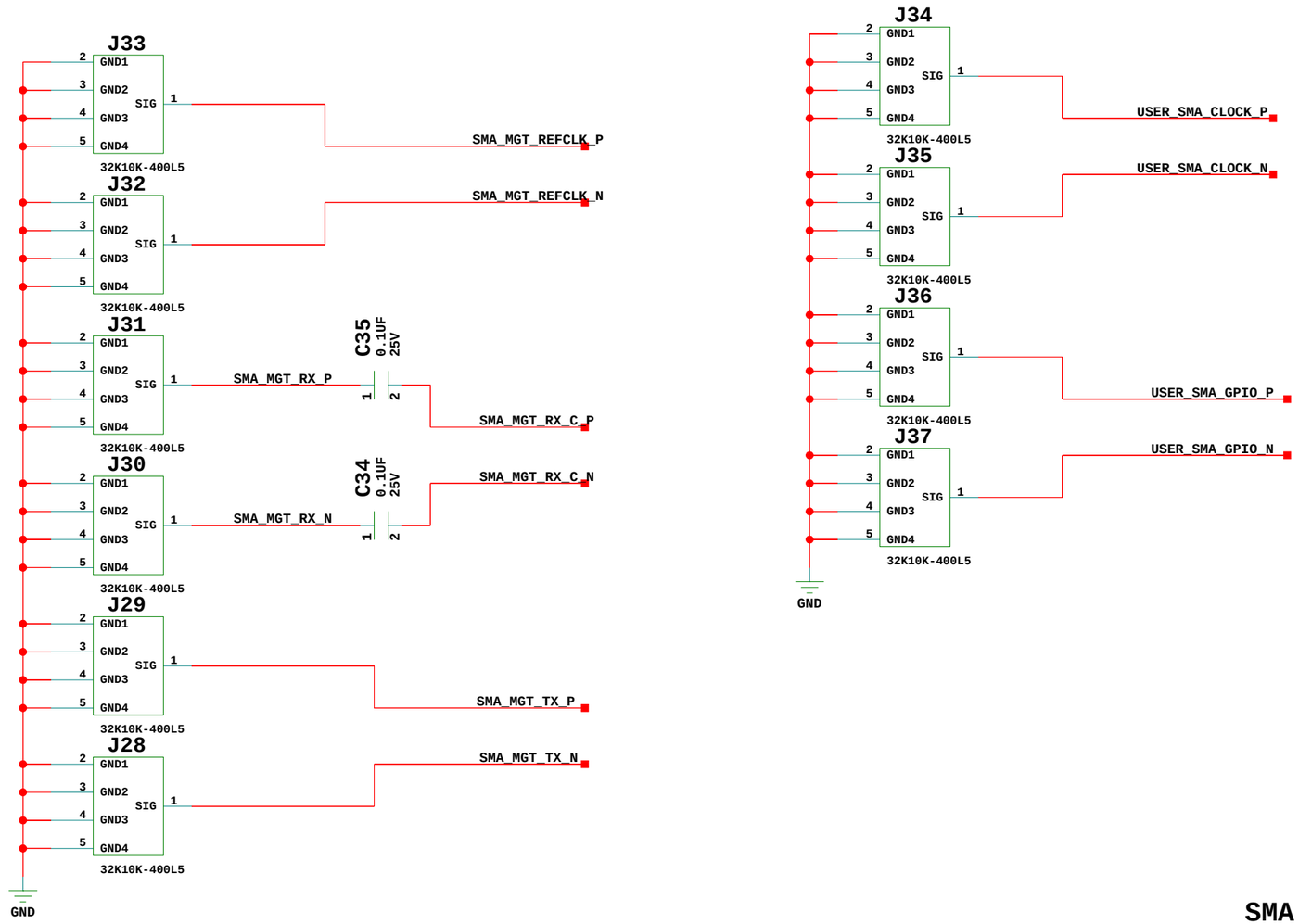

SMA Connectors

TITLE: SMA Connectors SCHEM, ROHS COMPLIANT HW-U1-KCU105_REV1_1	ASSY P/N: 0431811 PCB P/N: 1280723 SCH P/N: 0381556 TEST P/N: TSS0165
DATE: 05/20/2015:19:32	VER: 1.1
SHEET SIZE: B	REV: 02
SHEET 36 OF 66	DRAWN BY: BF

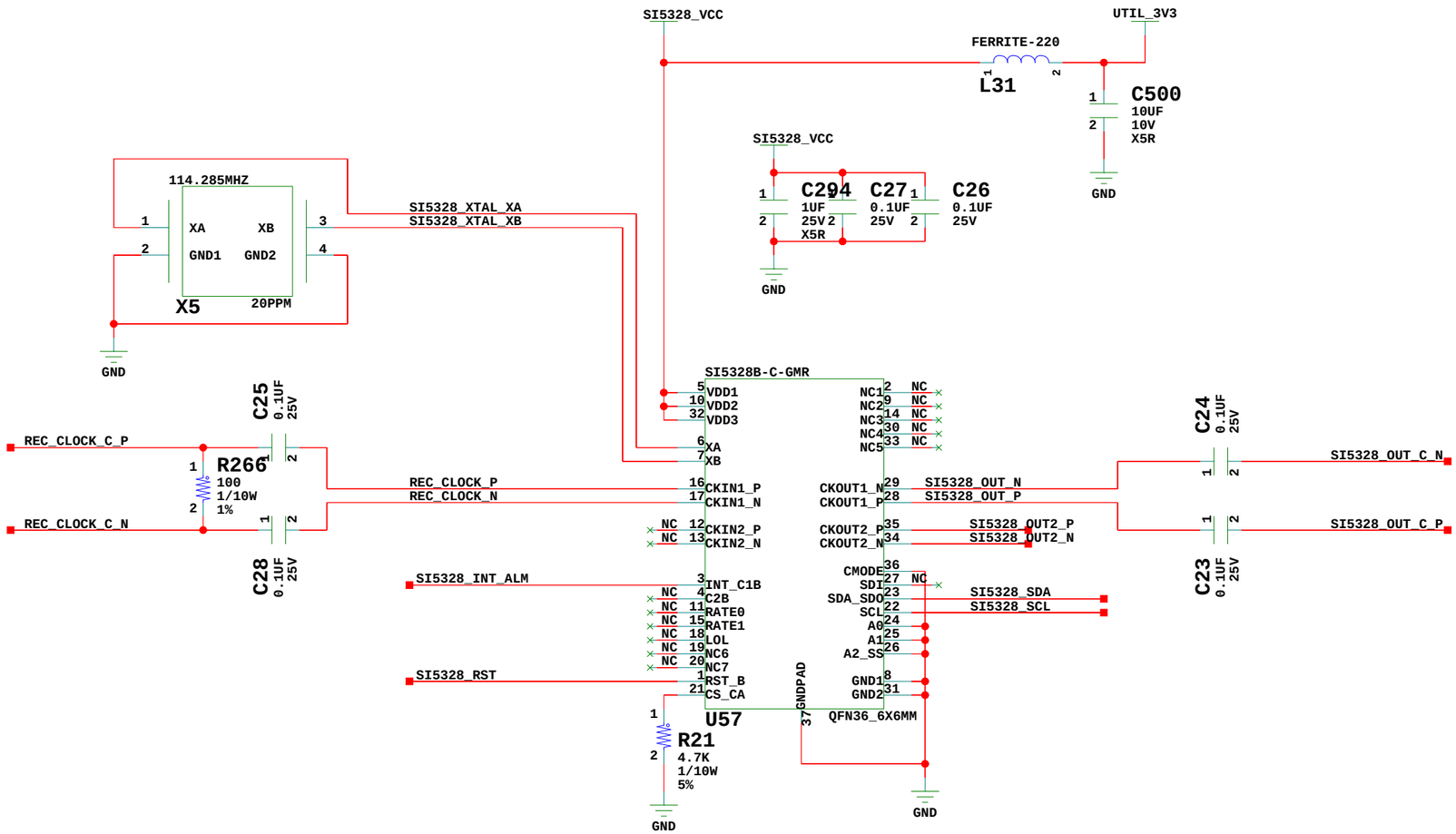

5328 Clock Recovery

XILINX

TITLE: 5328 Clock Recovery SCHEM, ROHS COMPLIANT HW-U1-KCU105_REV1_1	ASSY P/N: 0431811 PCB P/N: 1280723 SCH P/N: 0381556 TEST P/N: TSS0165
DATE: 05/20/2015:19:32	VER: 1.1
SHEET SIZE: B	REV: 02
SHEET 37 OF 66	DRAWN BY: BF

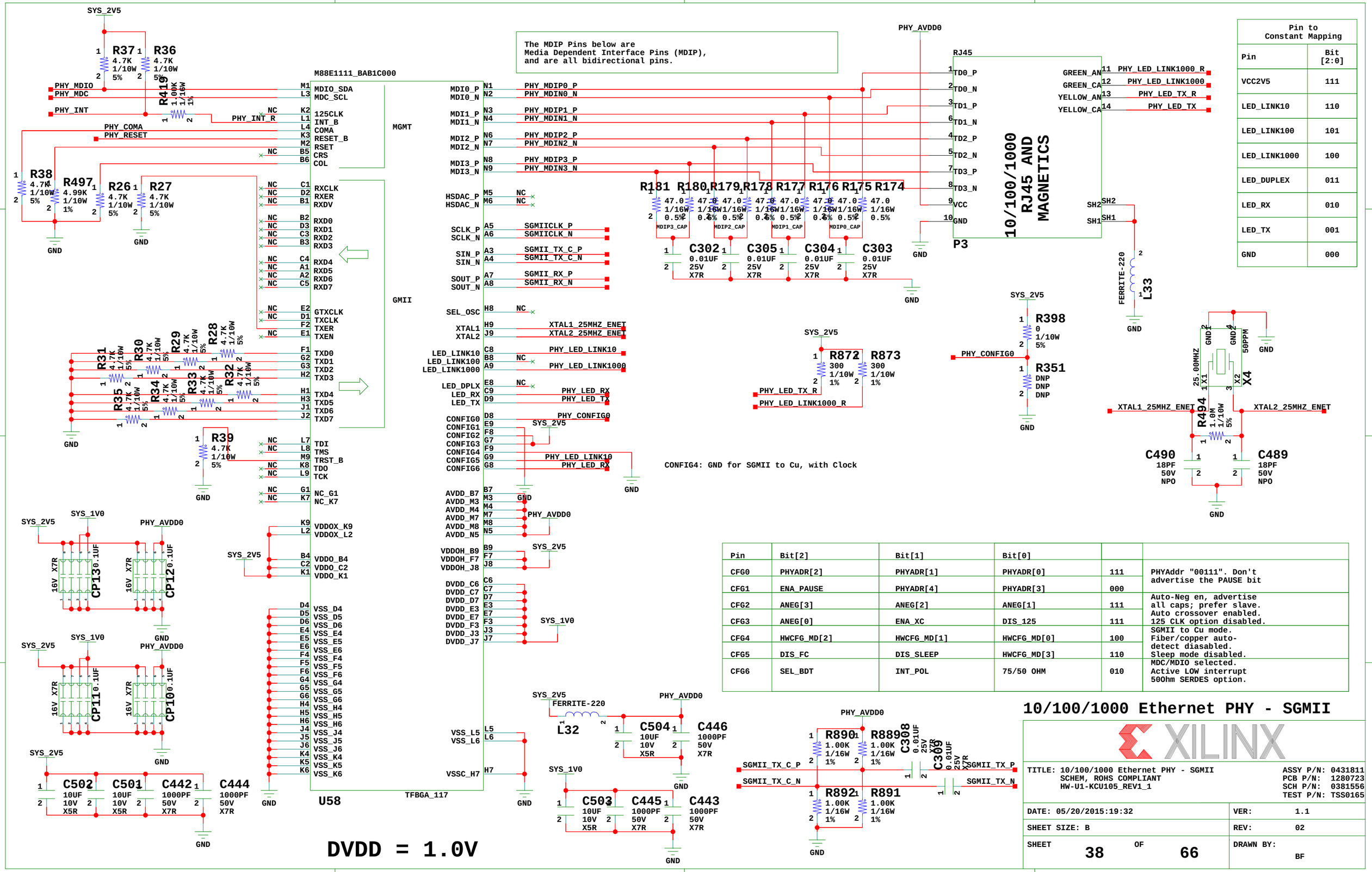

Pin to Constant Mapping	
Pin	Bit [2:0]
VCC2V5	111
LED_LINK10	110
LED_LINK100	101
LED_LINK1000	100
LED_DUPLEX	011
LED_RX	010
LED_TX	001
GND	000

Pin	Bit[2]	Bit[1]	Bit[0]		
CFG0	PHYADR[2]	PHYADR[1]	PHYADR[0]	111	PHYAddr "00111". Don't advertise the PAUSE bit
CFG1	ENA_PAUSE	PHYADR[4]	PHYADR[3]	000	
CFG2	ANEG[3]	ANEG[2]	ANEG[1]	111	Auto-Neg en, advertise all caps; prefer slave. Auto crossover enabled. 125 CLK option disabled.
CFG3	ANEG[0]	ENA_XC	DIS_125	111	
CFG4	HWCFG_MD[2]	HWCFG_MD[1]	HWCFG_MD[0]	100	SGMII to Cu mode. Fiber/copper auto-detect diasabled. Sleep mode disabled.
CFG5	DIS_FC	DIS_SLEEP	HWCFG_MD[3]	110	
CFG6	SEL_BDT	INT_POL	75/50 OHM	010	MDC/MDIO selected. Active LOW interrupt 50Ohm SERDES option.

10/100/1000 Ethernet PHY - SGMII

XILINX

TITLE: 10/100/1000 Ethernet PHY - SGMII
SCHEM, ROHS COMPLIANT
HW-U1-KCU105_REV1_1

ASSY P/N: 0431811
PCB P/N: 1280723
SCH P/N: 0381556
TEST P/N: TSS0165

DATE: 05/20/2015:19:32 | VER: 1.1
SHEET SIZE: B | REV: 02
SHEET 38 OF 66 | DRAWN BY: BF

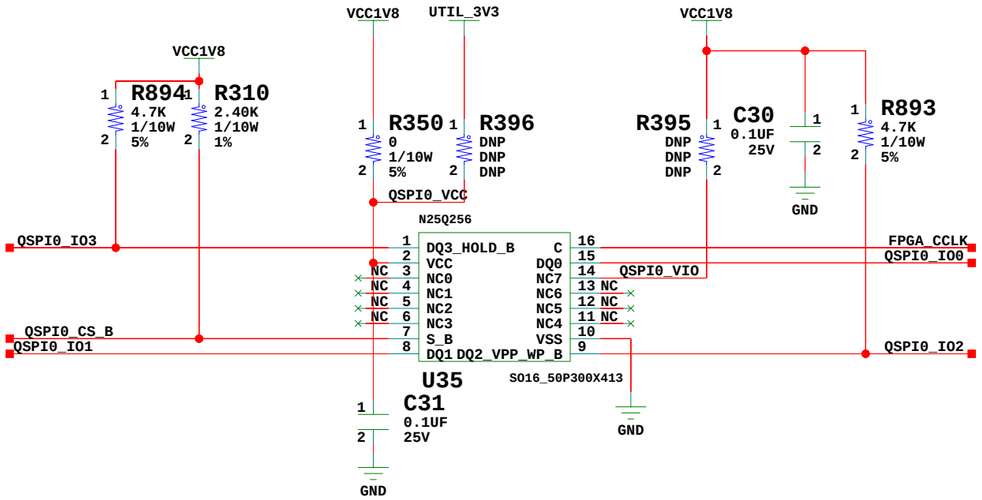

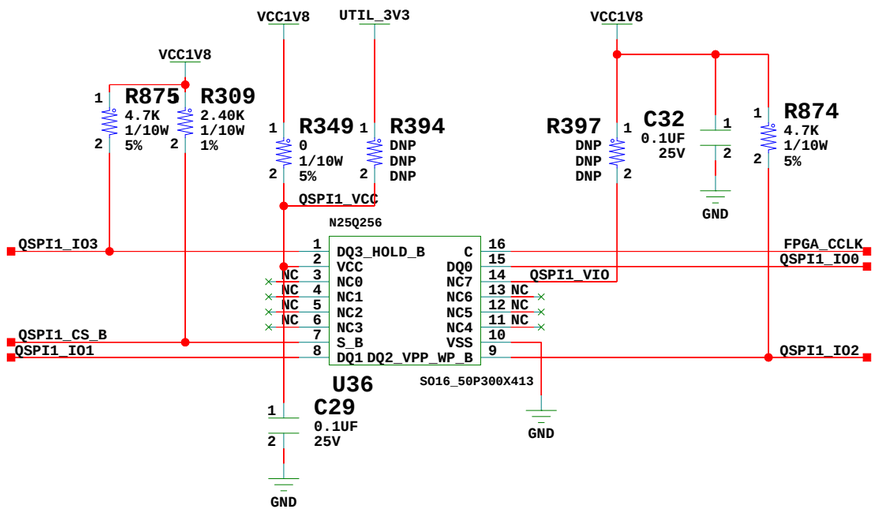

Dual Quad SPIs

XILINX

TITLE: Dual Quad SPIs SCHEM, ROHS COMPLIANT HW-U1-KCU105_REV1_1	ASSY P/N: 0431811 PCB P/N: 1280723 SCH P/N: 0381556 TEST P/N: TSS0165
DATE: 05/20/2015:19:32	VER: 1.1
SHEET SIZE: B	REV: 02
SHEET 39 OF 66	DRAWN BY: BF

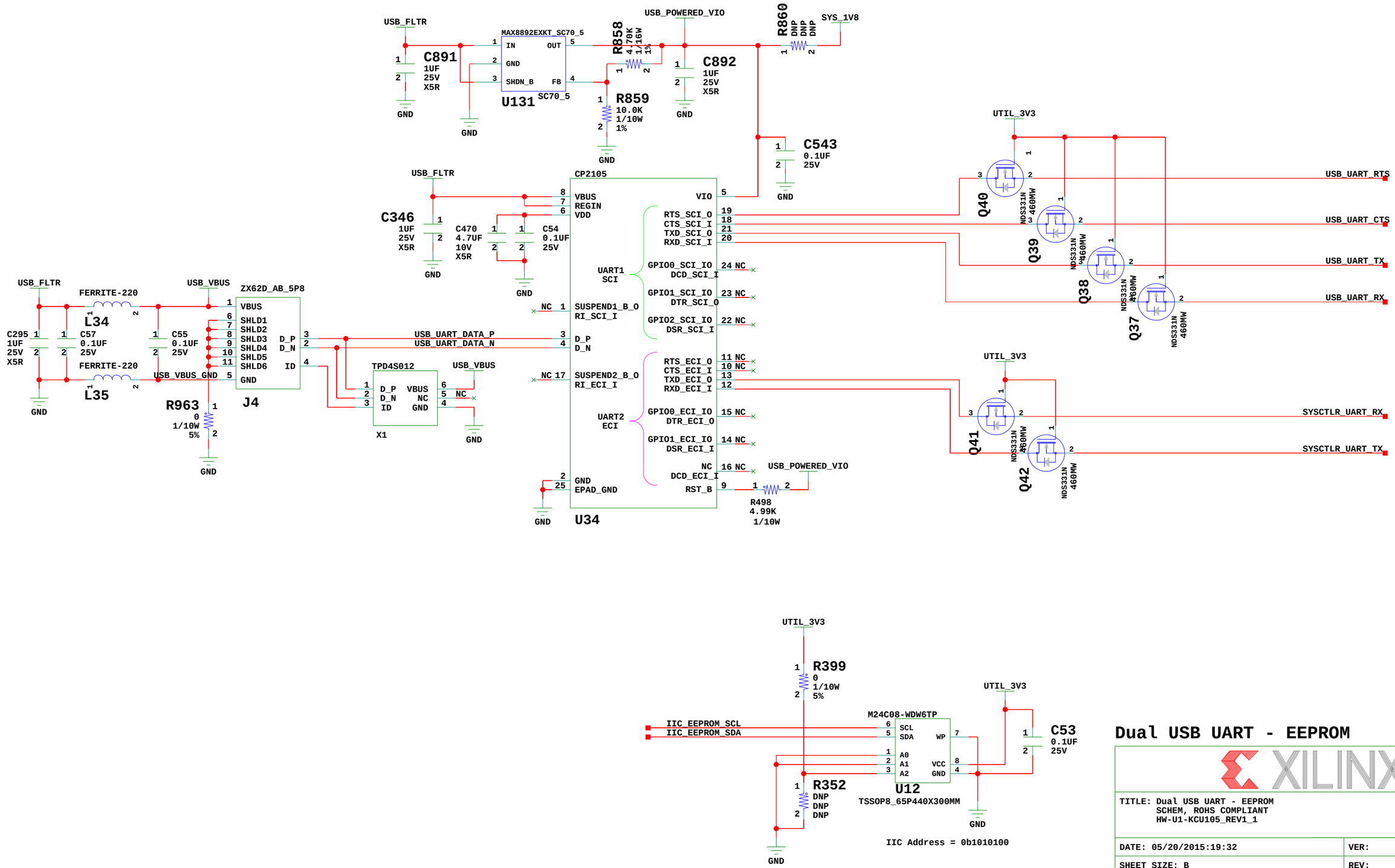

Dual USB UART - EEPROM

XILINX

TITLE: Dual USB UART - EEPROM SCHEM, ROHS COMPLIANT HW-U1-KCU105_REV1_1	ASSY P/N: 0431811 PCB P/N: 1280723 SCH P/N: 0381556 TEST P/N: TSS0165
DATE: 05/20/2015:19:32	VER: 1.1
SHEET SIZE: B	REV: 02
SHEET 40 OF 66	DRAWN BY: BF

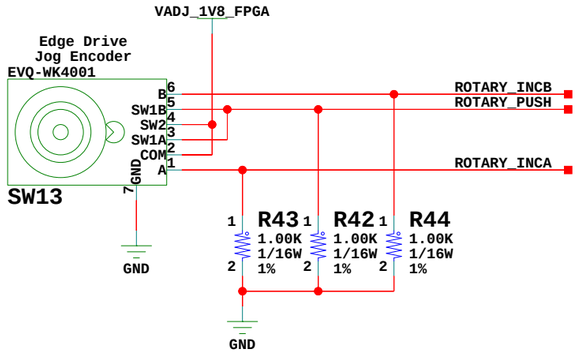

LEDs near top right edge

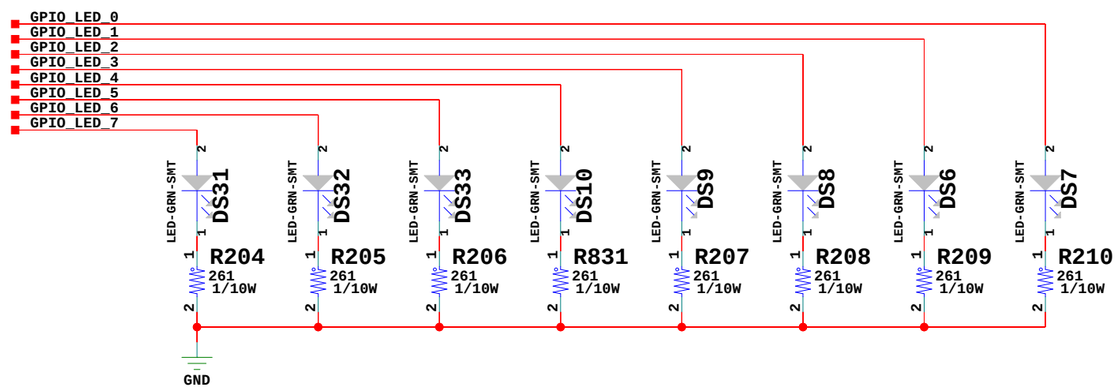

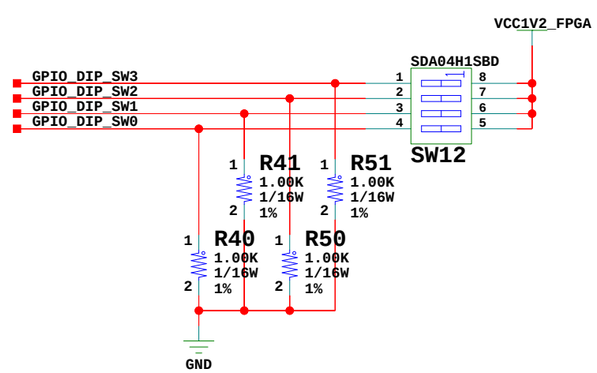

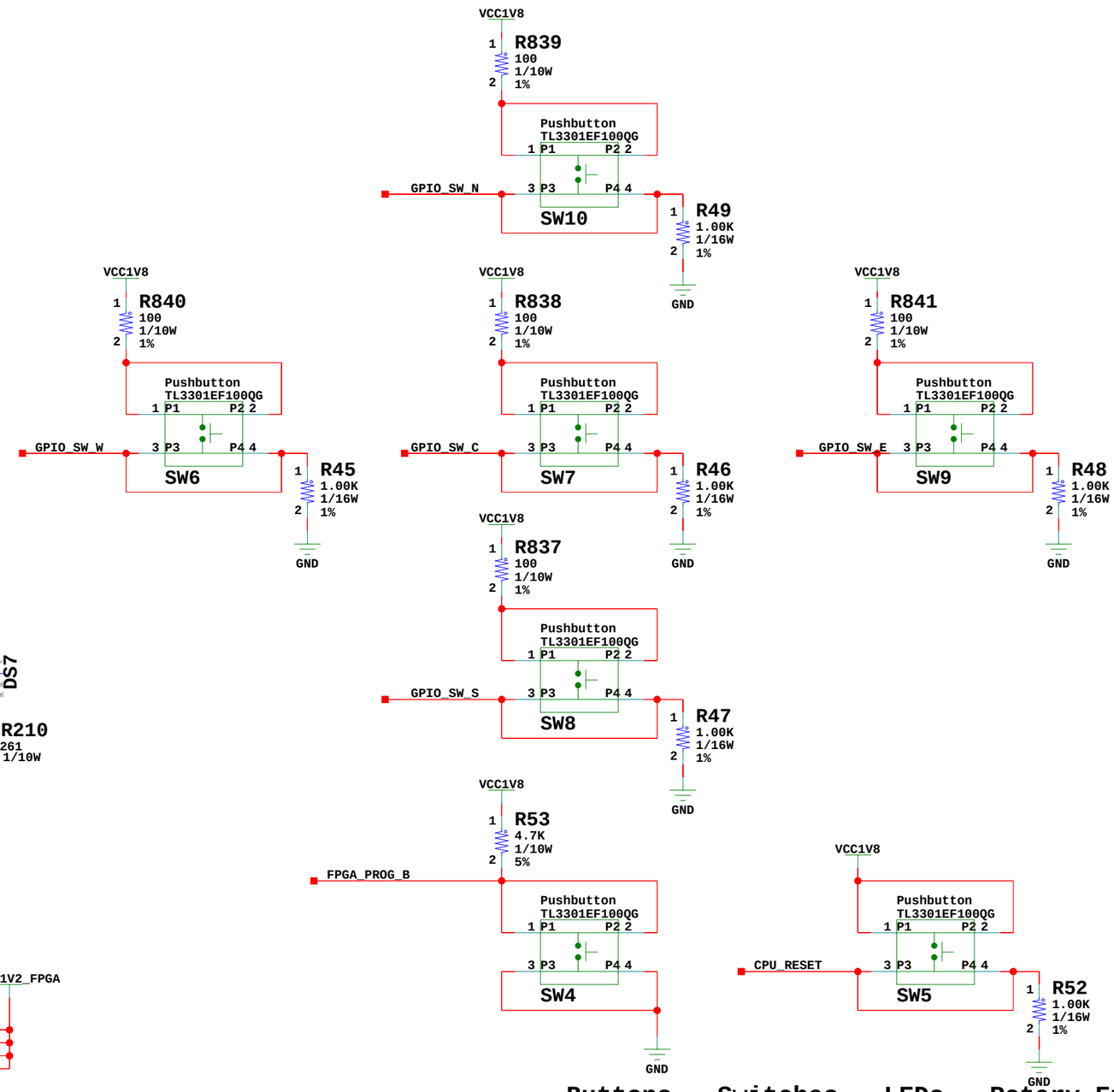

Buttons - Switches - LEDs - Rotary Encod

XILINX

TITLE: Buttons - Switches - LEDs - Rotary Encoder SCHEM, ROHS COMPLIANT HW-U1-KCU105_REV1_1	ASSY P/N: 0431811 PCB P/N: 1280723 SCH P/N: 0381556 TEST P/N: TSS0165
DATE: 05/20/2015:19:32	VER: 1.1
SHEET SIZE: B	REV: 02
SHEET 41 OF 66	DRAWN BY: BF

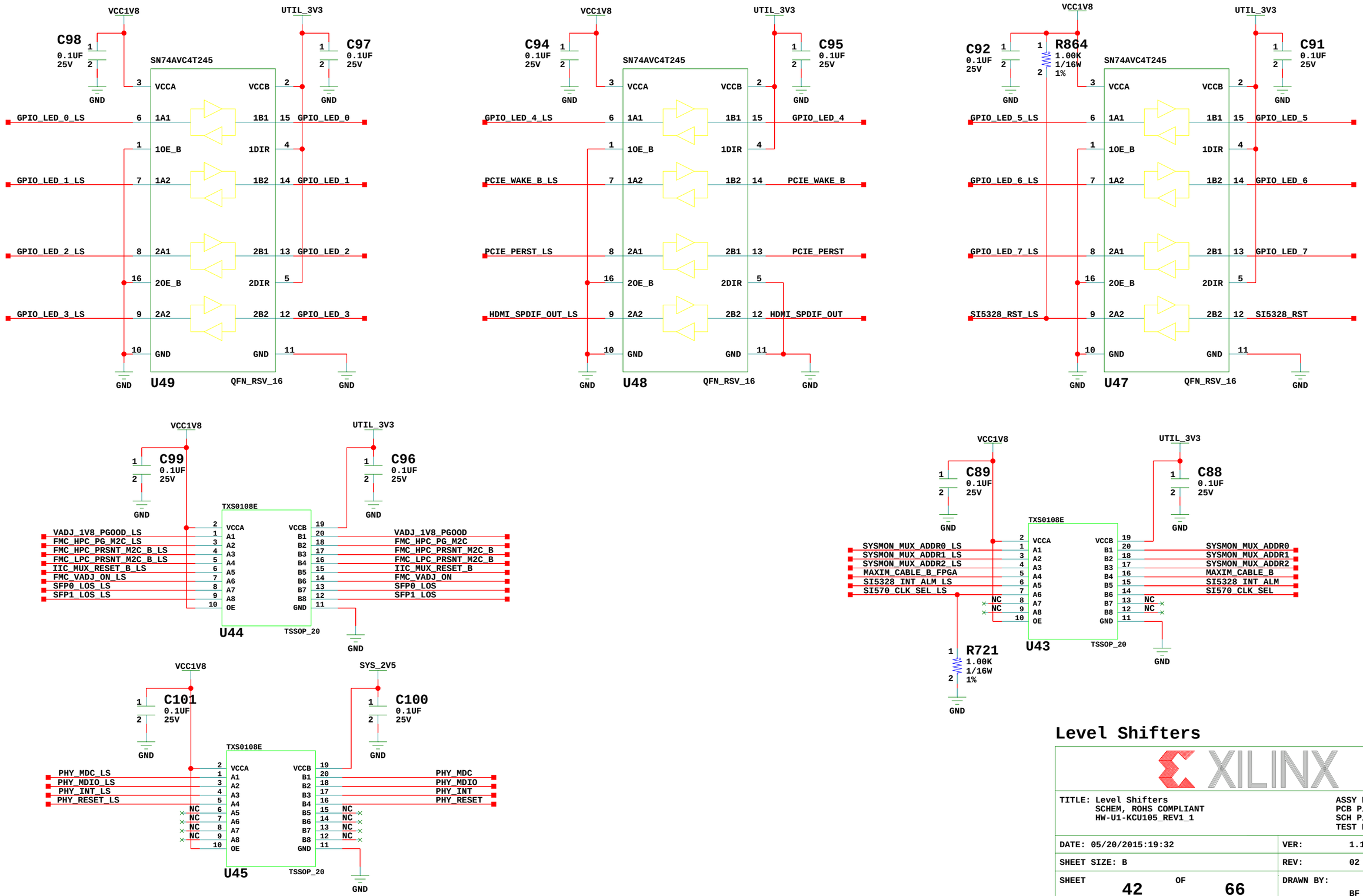

Level Shifters

XILINX

TITLE: Level Shifters SCHEM, ROHS COMPLIANT HW-U1-KCU105_REV1_1	ASSY P/N: 0431811 PCB P/N: 1280723 SCH P/N: 0381556 TEST P/N: TSS0165
DATE: 05/20/2015:19:32	VER: 1.1
SHEET SIZE: B	REV: 02
SHEET 42 OF 66	DRAWN BY: BF

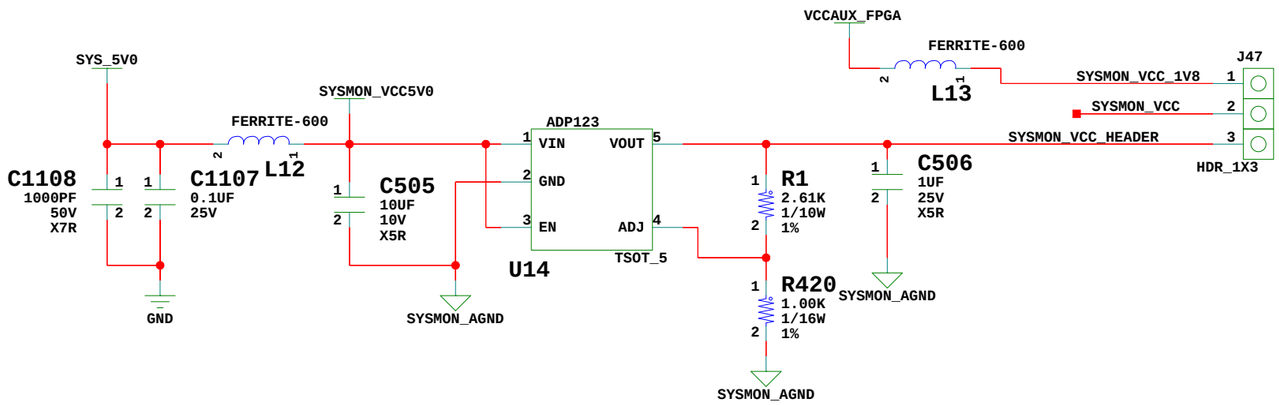

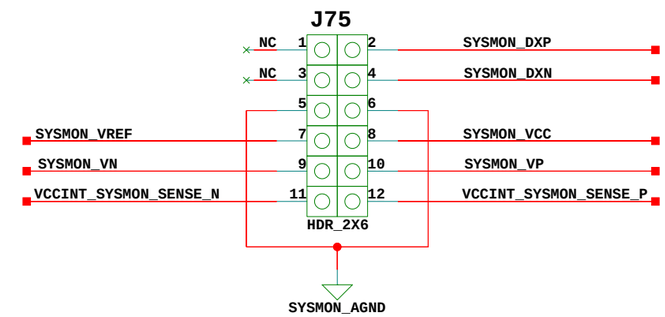

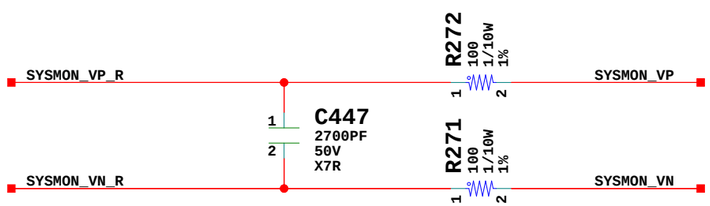

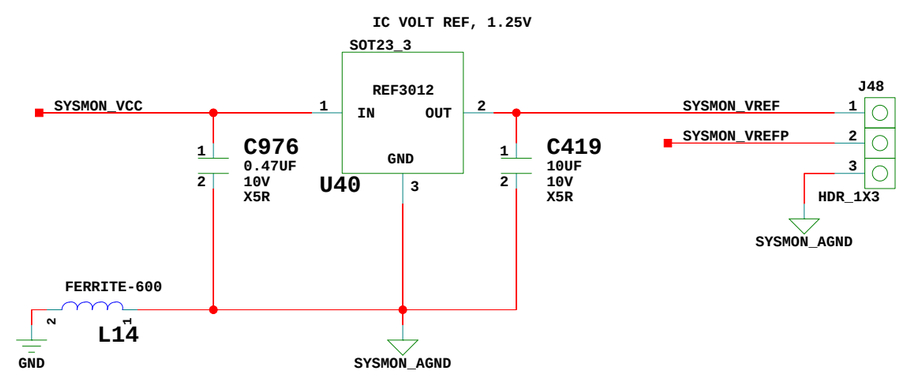

SYSMON Header and Reference

XILINX

TITLE: SYSMON Header and Reference SCHEM, ROHS COMPLIANT HW-U1-KCU105_REV1_1	ASSY P/N: 0431811 PCB P/N: 1280723 SCH P/N: 0381556 TEST P/N: TSS0165
DATE: 05/20/2015:19:32	VER: 1.1
SHEET SIZE: B	REV: 02
SHEET 43 OF 66	DRAWN BY: BF

VCCINT 0A-40A => CS = 0V - 1V G=12.5, Rg=8.66K

NOTE: VCCINT sense resistor is 0.002ohms

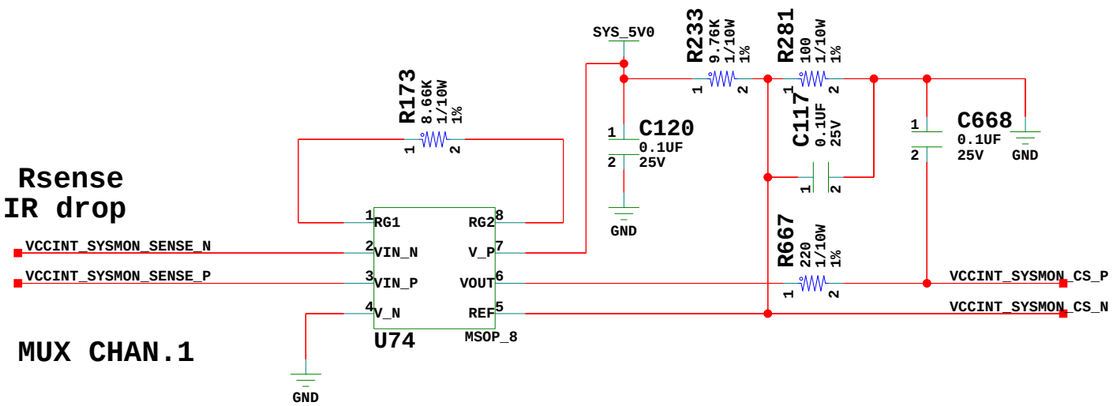

VCCAUX 0A-5A => CS = 0V - 0.95V
G=38, Rg=2.7K

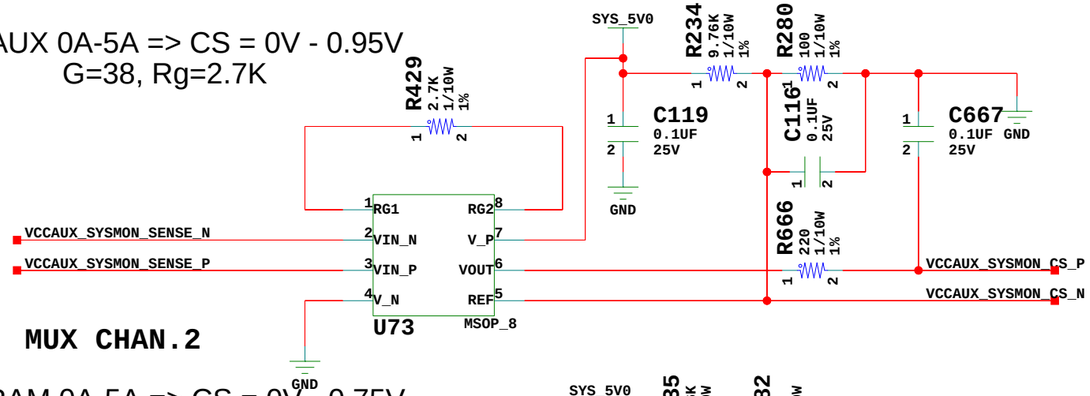

VCCBRAM 0A-5A => CS = 0V - 0.75V
G=30, Rg=3.4K

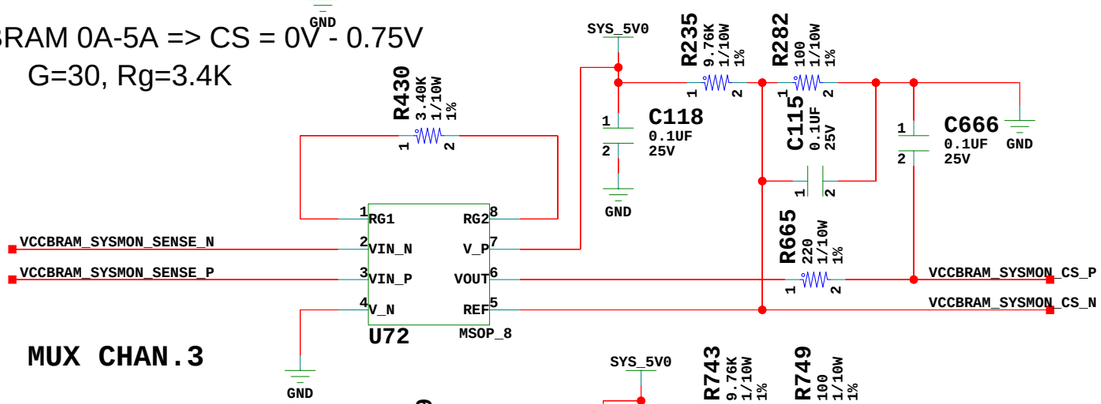

VCC1V8 0A-2A => CS = 0V - 1V
G=100, Rg=1.00K

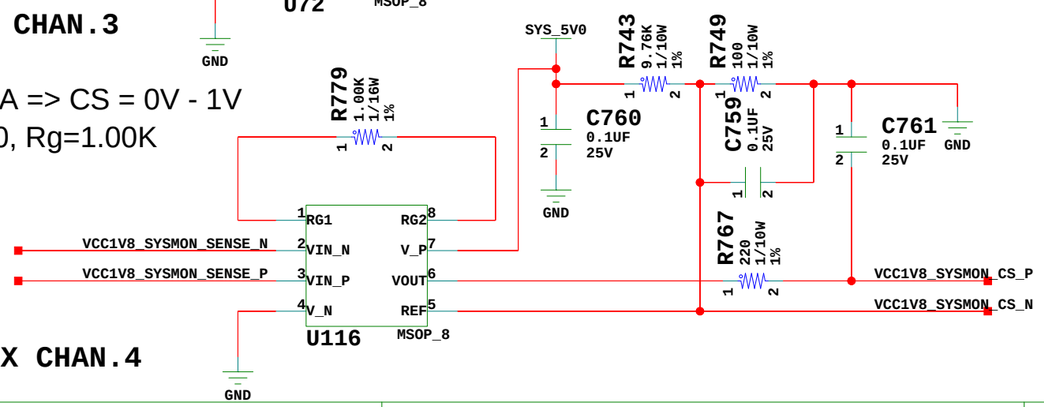

SYSMON Monitoring 1

XILINX

TITLE: SYSMON Monitoring 1 SCHEM, ROHS COMPLIANT HW-U1-KCU105_REV1_1	ASSY P/N: 0431811 PCB P/N: 1280723 SCH P/N: 0381556 TEST P/N: TSS0165
DATE: 05/20/2015:19:32	VER: 1.1
SHEET SIZE: B	REV: 02
SHEET 44 OF 66	DRAWN BY: BF

VADJ_1V8 0A-10A => CS = 0V - 1V
G=20, Rg=5.23K

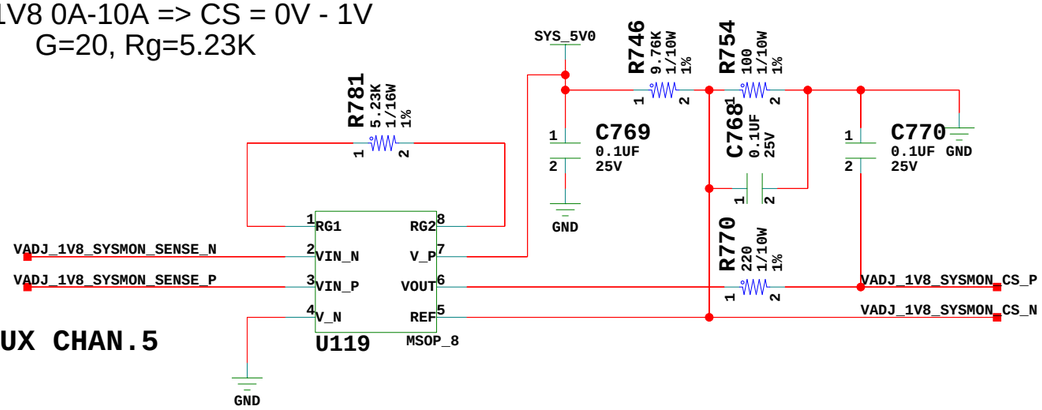

MUX CHAN.5

VCC1V2 0A-3A => CS = 0V - 0.90V
G=60, Rg=1.69K

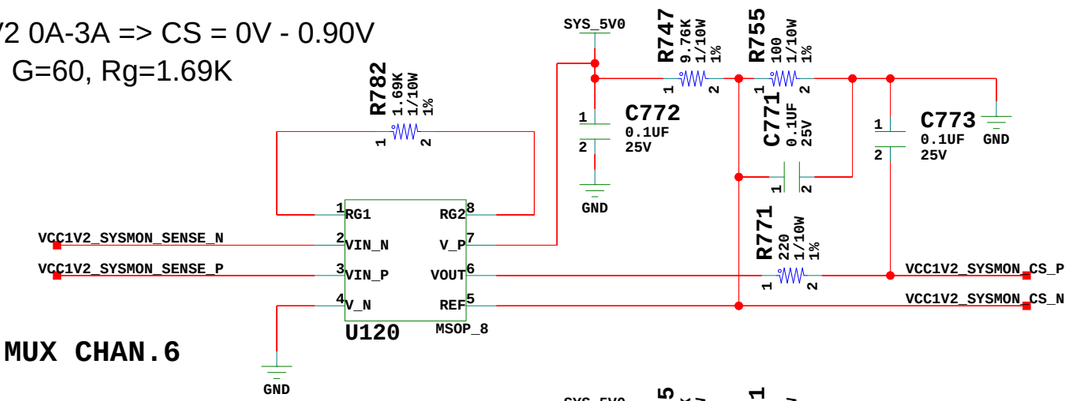

MUX CHAN.6

MGTAVCC 0A-5A => CS = 0V - 0.75V
G=30, Rg=3.40K

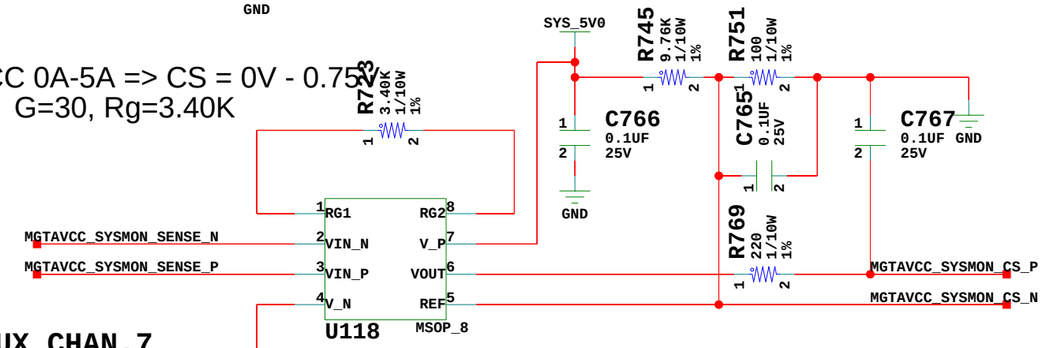

MUX CHAN.7

MGTAVTT 0A-5A => CS = 0V - 0.75V
G=30, Rg=3.40K

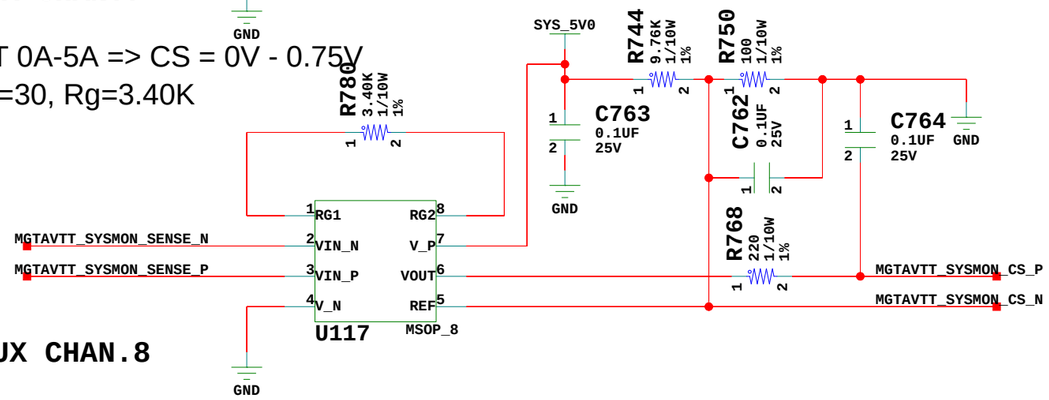

MUX CHAN.8

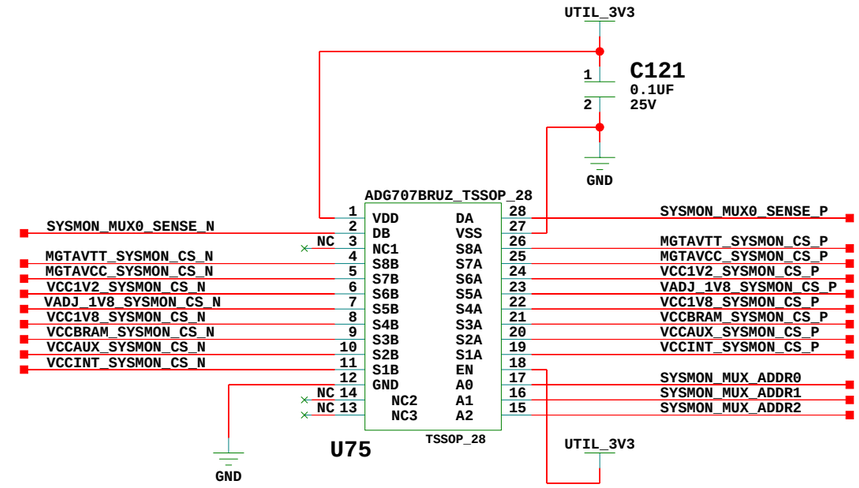

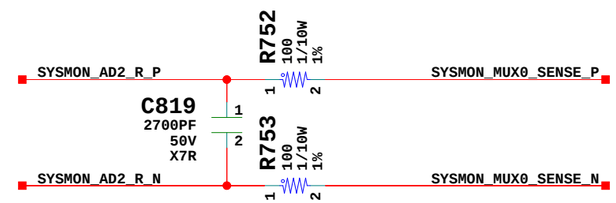

MGTAVCC 1.0V SCALED to 0.5V

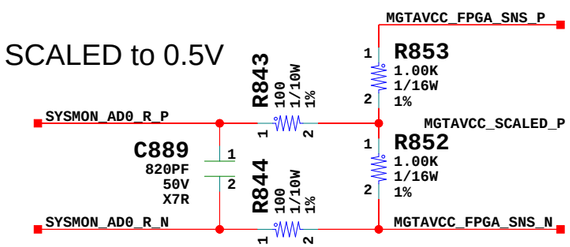

MGTAVTT 1.2V SCALED to 0.6V

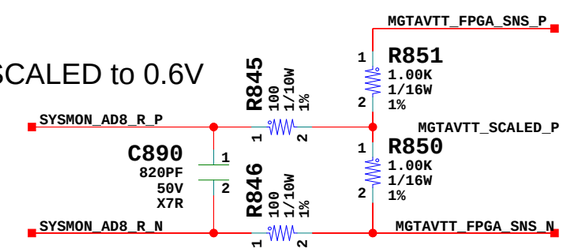

SYSMON Monitoring 2

XILINX

TITLE: SYSMON Monitoring 2 SCHEM, ROHS COMPLIANT HW-U1-KCU105_REV1_1	ASSY P/N: 0431811 PCB P/N: 1280723 SCH P/N: 0381556 TEST P/N: TSS0165
DATE: 05/20/2015:19:32	VER: 1.1
SHEET SIZE: B	REV: 02
SHEET 45 OF 66	DRAWN BY: BF

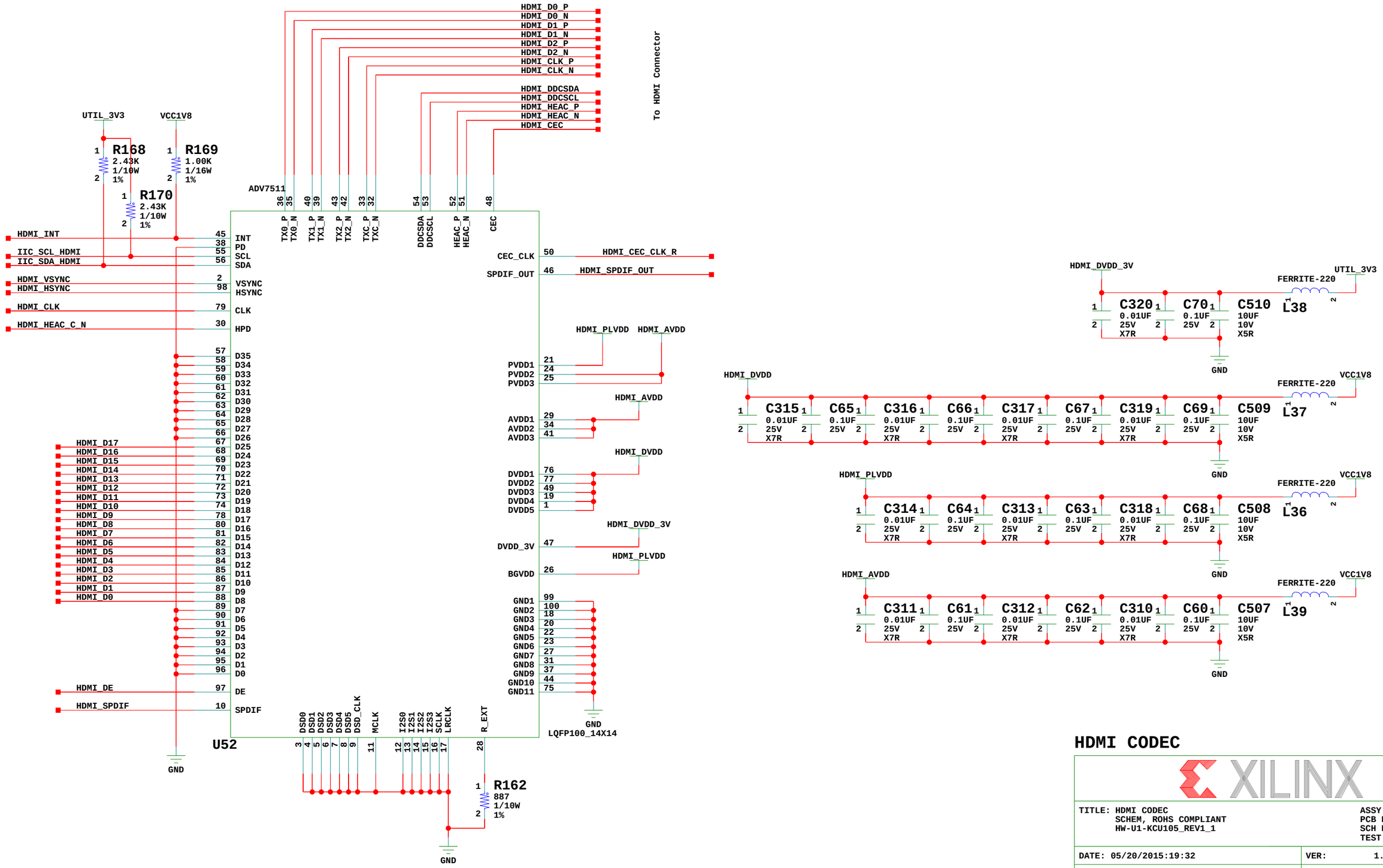

HDMI CODEC

XILINX

TITLE: HDMI CODEC SCHEM, ROHS COMPLIANT HW-U1-KCU105_REV1_1	ASSY P/N: 0431811 PCB P/N: 1280723 SCH P/N: 0381556 TEST P/N: TSS0165
DATE: 05/20/2015:19:32	VER: 1.1
SHEET SIZE: B	REV: 02
SHEET 46 OF 66	DRAWN BY: BF

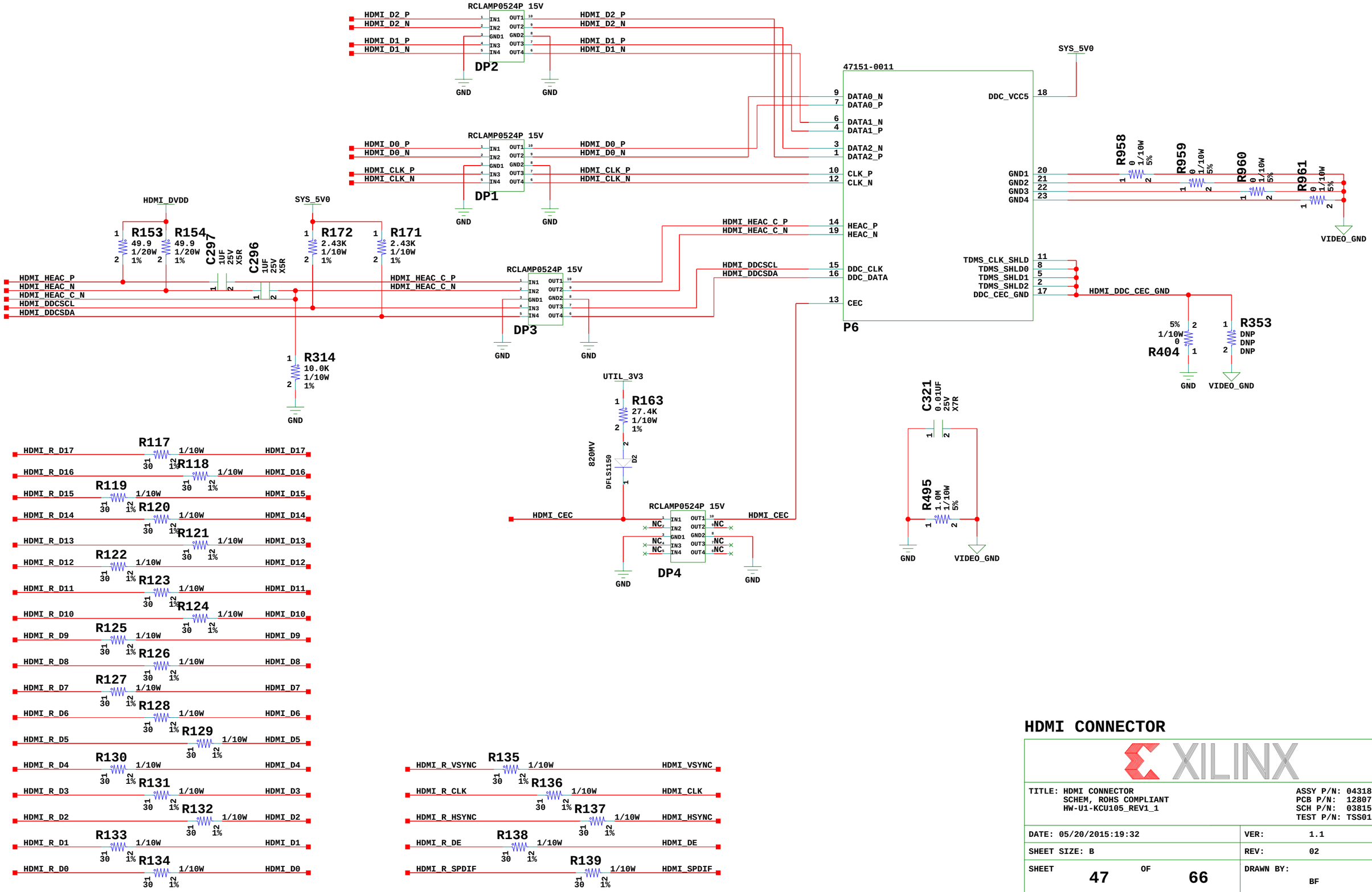

HDMI CONNECTOR

XILINX

TITLE: HDMI CONNECTOR SCHEM, ROHS COMPLIANT HW-U1-KCU105_REV1_1	ASSY P/N: 0431811 PCB P/N: 1280723 SCH P/N: 0381556 TEST P/N: TSS0165
DATE: 05/20/2015:19:32	VER: 1.1
SHEET SIZE: B	REV: 02
SHEET 47 OF 66	DRAWN BY: BF

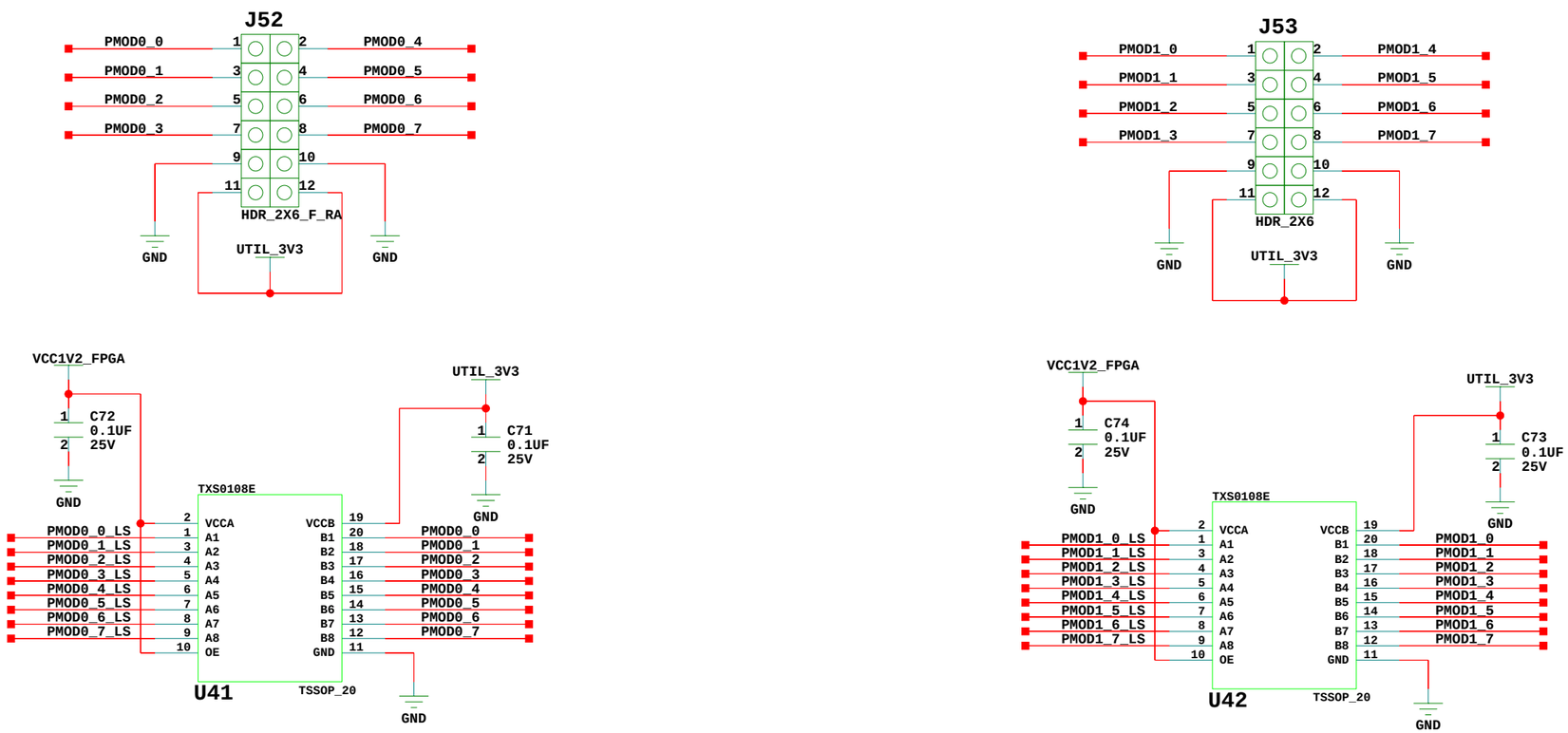

PMODs and Level Shifters

XILINX

TITLE: PMODs and Level Shifters SCHEM, ROHS COMPLIANT HW-U1-KCU105_REV1_1	ASSY P/N: 0431811 PCB P/N: 1280723 SCH P/N: 0381556 TEST P/N: TSS0165
DATE: 05/20/2015:19:32	VER: 1.1
SHEET SIZE: B	REV: 02
SHEET 48 OF 66	DRAWN BY: BF

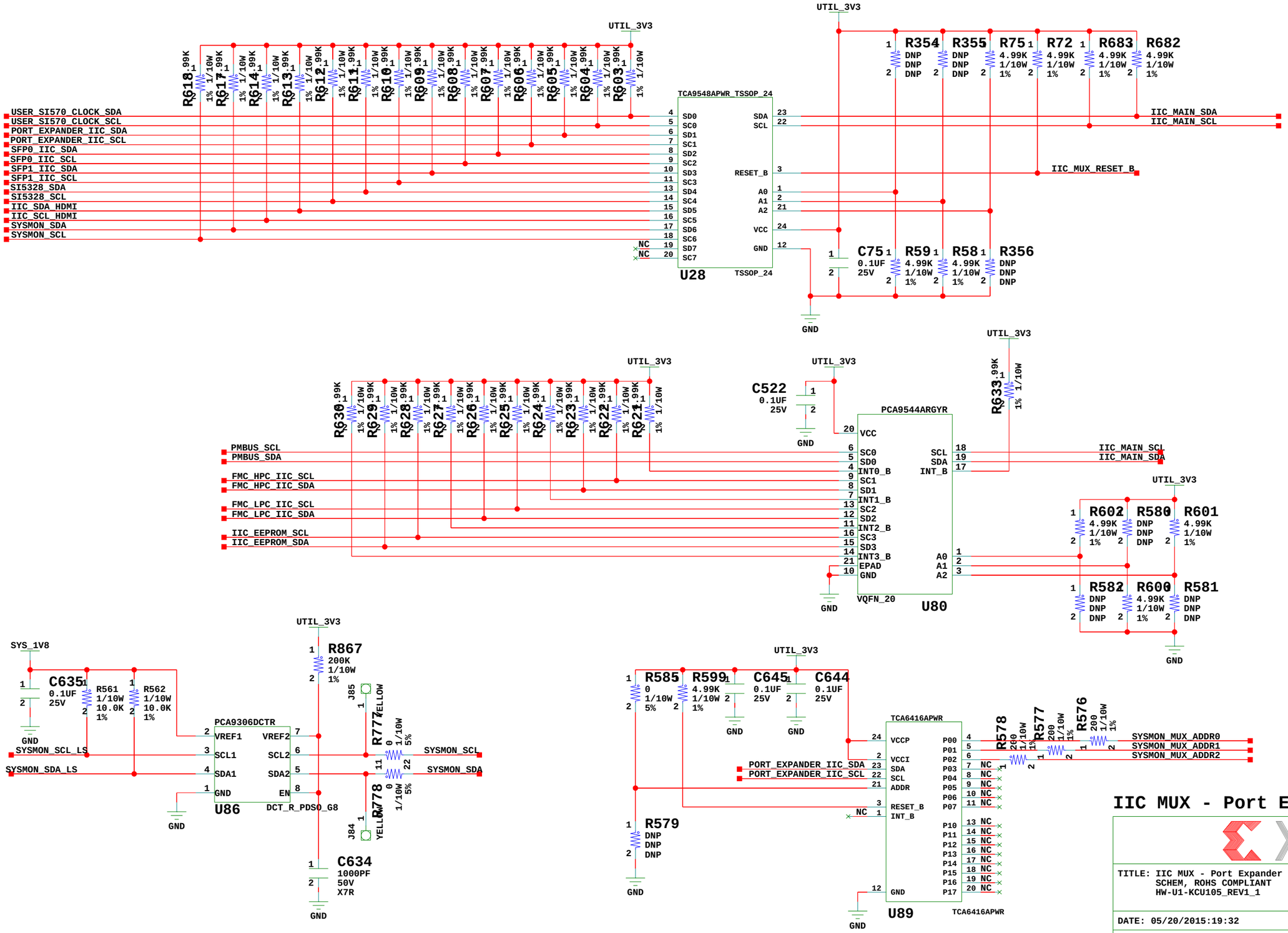

IIC MUX - Port Expander

XILINX

TITLE: IIC MUX - Port Expander SCHEM, ROHS COMPLIANT HW-U1-KCU105_REV1_1	ASSY P/N: 0431811 PCB P/N: 1280723 SCH P/N: 0381556 TEST P/N: TSS0165
DATE: 05/20/2015:19:32	VER: 1.1
SHEET SIZE: B	REV: 02
SHEET 49 OF 66	DRAWN BY: BF

MAXIM PMBUS PROGRAMMING CABLE

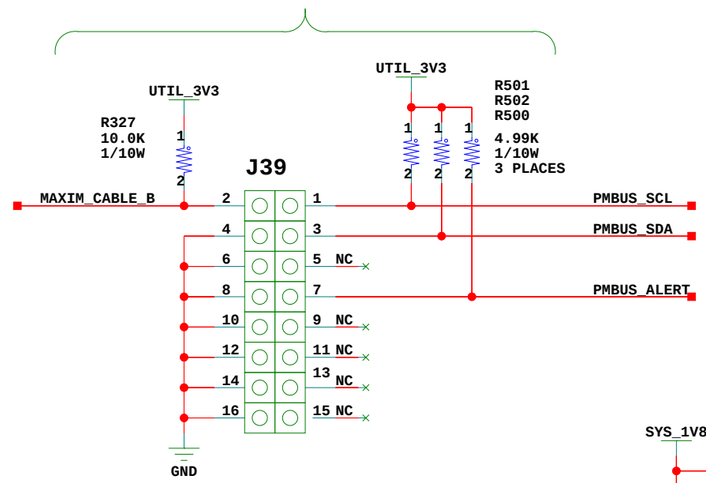

FPGA I2C Level Shifter

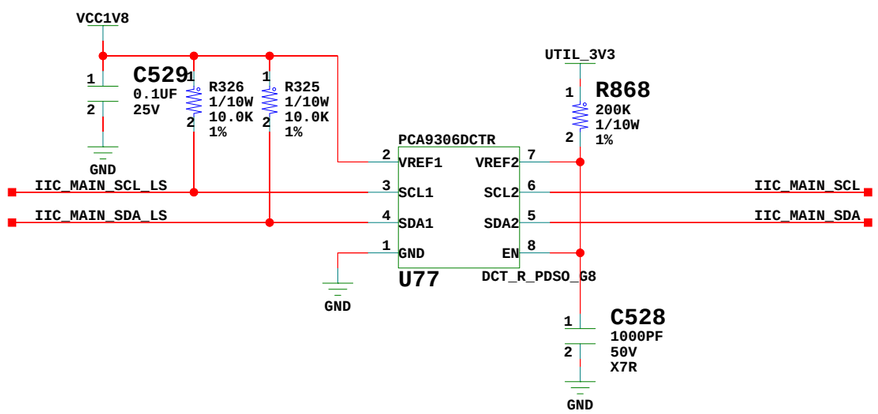

SYSCTLR I2C Level Shifter

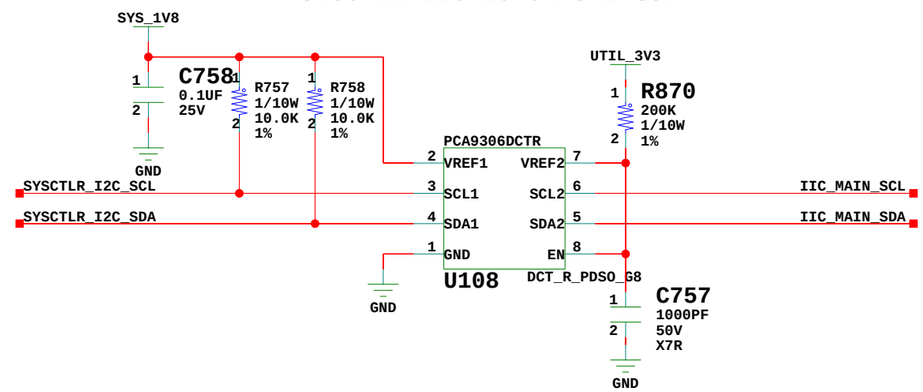

SYSCTLR ALERT Level Shifter

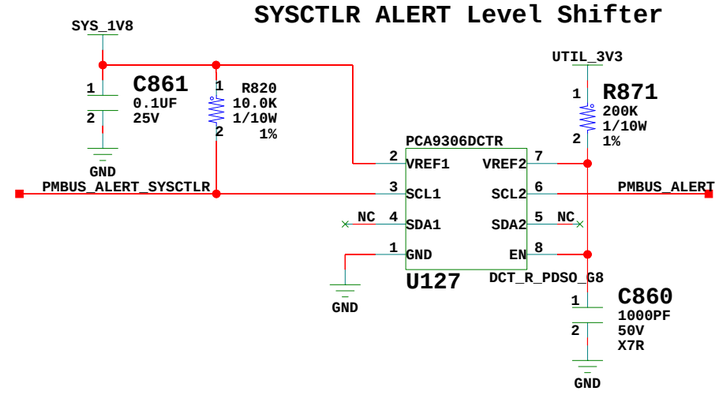

FPGA ALERT Level Shifter

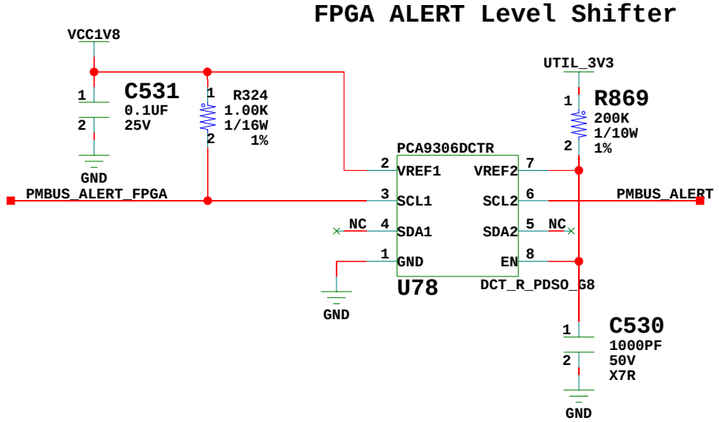

PMBUS Header - I2C Level Shifters

XILINX

TITLE: PMBUS Header - I2C Level Shifters SCHEM, ROHS COMPLIANT HW-U1-KCU105_REV1_1	ASSY P/N: 0431811 PCB P/N: 1280723 SCH P/N: 0381556 TEST P/N: TSS0165
DATE: 05/20/2015:19:32	VER: 1.1
SHEET SIZE: B	REV: 02
SHEET 50 OF 66	DRAWN BY: BF

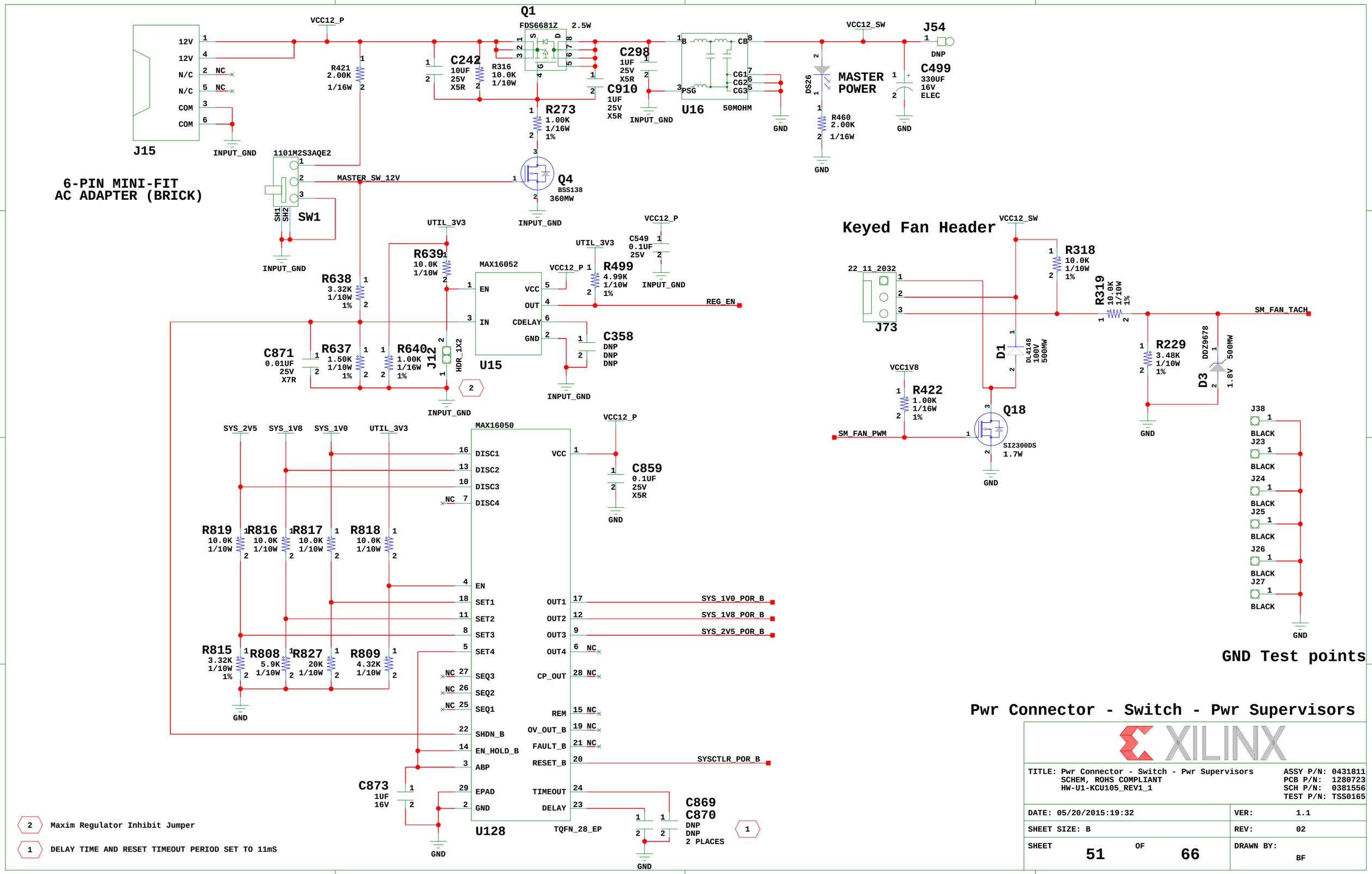
6-PIN MINI-FIT
AC ADAPTER (BRICK)
J15
12V
12V
N/C
N/C
COM
COM
NC
NC
INPUT_GND
VCC12_P
R421
2.00K
1/16W
C242
10UF
25V
X5R
R316
10.0K
1/10W
Q1
FDS6681Z
2.5W
C298
1UF
25V
X5R
C910
1UF
25V
X5R
U16
50MOHM
PSG
CB
CG1
CG2
CG3
VCC12_SW
J54
DNP
C499
330UF
16V
ELEC
DS26
MASTER
POWER
R460
2.00K
1/16W
GND
R273
1.00K
1/16W
1%
Q4
BSS138
360MW
1101M2S3AQE2
SW1
SH1
SH2
MASTER_SW_12V
UTIL_3V3
R639
10.0K
1/10W
R638
3.32K
1/10W
1%
MAX16052
EN
IN
VCC
OUT
CDELAY
GND
U15
VCC12_P
R499
4.99K
1/10W
1%
C549
0.1UF
25V
REG_EN
C358
DNP
DNP
DNP
C871
0.01UF
25V
X7R
R637
1.50K
1/10W
1%
R640
1.00K
1/16W
1%
J12
HDR_1X2
2
Keyed Fan Header
22_11_2032
J73
R318
10.0K
1/10W
1%
R319
10.0K
1/10W
1%
SM_FAN_TACH
D1
DL4148
100V
500MW
R229
3.48K
1/10W
1%
D3
DDZ9678
1.8V
500MW
VCC1V8
R422
1.00K
1/16W
1%
SM_FAN_PWM
Q18
SI2300DS
1.7W
SYS_2V5
SYS_1V8
SYS_1V0
UTIL_3V3
MAX16050
DISC1
DISC2
DISC3
DISC4
VCC
C859
0.1UF
25V
X5R
R819
10.0K
1/10W
R816
10.0K
1/10W
R817
10.0K
1/10W
R818
10.0K
1/10W
EN
SET1
SET2
SET3
SET4
SEQ3
SEQ2
SEQ1
SHDN_B
EN_HOLD_B
ABP
EPAD
GND
OUT1
OUT2
OUT3
OUT4
CP_OUT
REM
OV_OUT_B
FAULT_B
RESET_B
TIMEOUT
DELAY
SYS_1V0_POR_B
SYS_1V8_POR_B
SYS_2V5_POR_B
SYSCTLR_POR_B
R815
3.32K
1/10W
1%
R808
5.9K
1/10W
R827
20K
1/10W
R809
4.32K
1/10W
C873
1UF
16V
U128
TQFN_28_EP
C869
C870
DNP
DNP
2 PLACES
1
J38
BLACK
J23
BLACK
J24
BLACK
J25
BLACK
J26
BLACK
J27
BLACK
GND Test points
2 Maxim Regulator Inhibit Jumper
1 DELAY TIME AND RESET TIMEOUT PERIOD SET TO 11mS
Pwr Connector - Switch - Pwr Supervisors
XILINX
TITLE: Pwr Connector - Switch - Pwr Supervisors
SCHEM, ROHS COMPLIANT
HW-U1-KCU105_REV1_1
ASSY P/N: 0431811
PCB P/N: 1280723
SCH P/N: 0381556
TEST P/N: TSS0165
DATE: 05/20/2015:19:32
VER: 1.1
SHEET SIZE: B
REV: 02
SHEET 51 OF 66
DRAWN BY: BF

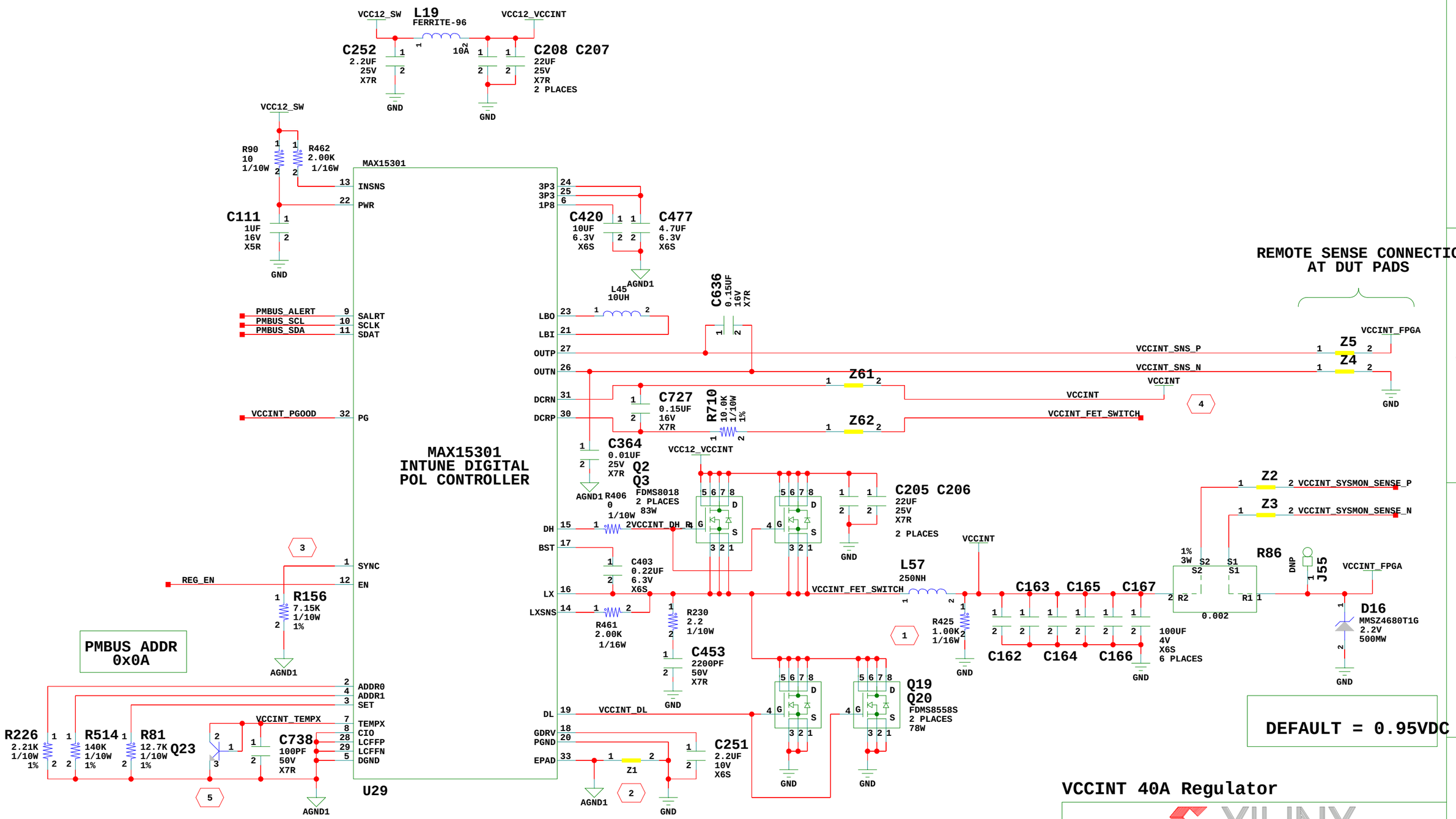

VCCINT 40A Regulator

XILINX

TITLE: VCCINT 40A Regulator SCHEM, ROHS COMPLIANT HW-U1-KCU105_REV1_1	ASSY P/N: 0431811 PCB P/N: 1280723 SCH P/N: 0381556 TEST P/N: TSS0165
DATE: 05/20/2015:19:32	VER: 1.1
SHEET SIZE: B	REV: 02
SHEET 52 OF 66	DRAWN BY: BF

3. VCCINT RAIL SWITCHING FREQUENCY IS 400kHz AND SHOULD NOT BE SYNCHRONIZED TO OTHER LOWER CURRENT RAILS OPERATING AT 600 kHZ.

2. CONNECT AGND TO GND AT OUTPUT CAPACITORS

1. MINIMUM 1K LOAD REQUIRED. MUST BE CONNECTED BEFORE SENSE RESISTOR TO AVOID CONTRIBUTION TO CURRENT MEASUREMENTS.

5. PLACE TEMP COMPENSATION TRANSISTOR ON THE BACKSIDE OF THE BOARD DIRECTLY UNDER OUTPUT INDUCTOR

4. CONNECT ACROSS PINS OF OUTPUT INDUCTOR

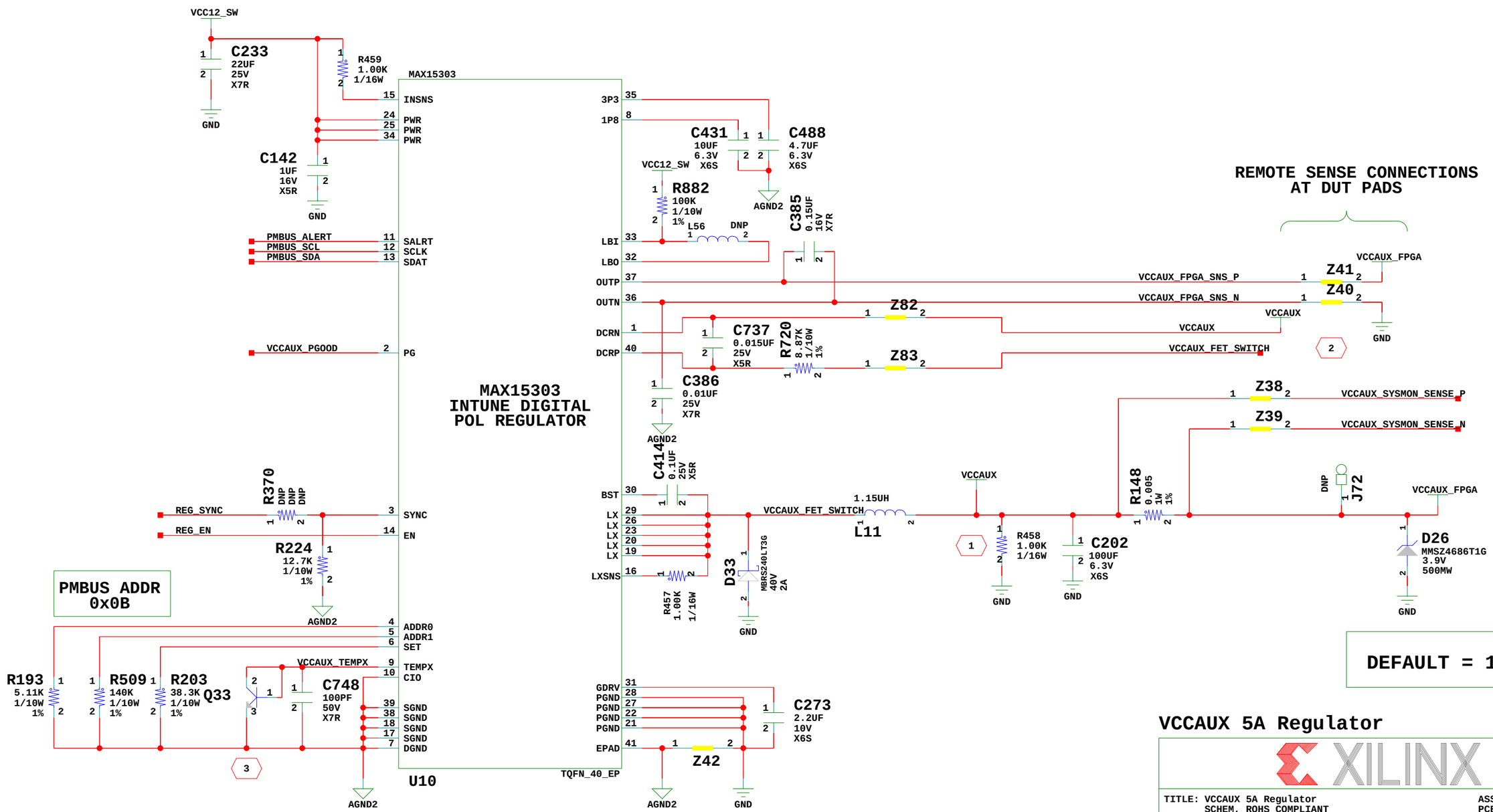

VCCAUX 5A Regulator

XILINX

TITLE: VCCAUX 5A Regulator SCHEM, ROHS COMPLIANT HW-U1-KCU105_REV1_1	ASSY P/N: 0431811 PCB P/N: 1280723 SCH P/N: 0381556 TEST P/N: TSS0165
DATE: 05/20/2015:19:32	VER: 1.1
SHEET SIZE: B	REV: 02
SHEET 53 OF 66	DRAWN BY: BF

3 PLACE TEMP COMPENSATION TRANSISTOR ON THE BACKSIDE OF THE BOARD DIRECTLY UNDER OUTPUT INDUCTOR

2 CONNECT ACROSS PINS OF OUTPUT INDUCTOR

1 MINIMUM 1K LOAD REQUIRED. MUST BE CONNECTED BEFORE SENSE RESISTOR TO AVOID CONTRIBUTION TO CURRENT MEASUREMENTS.

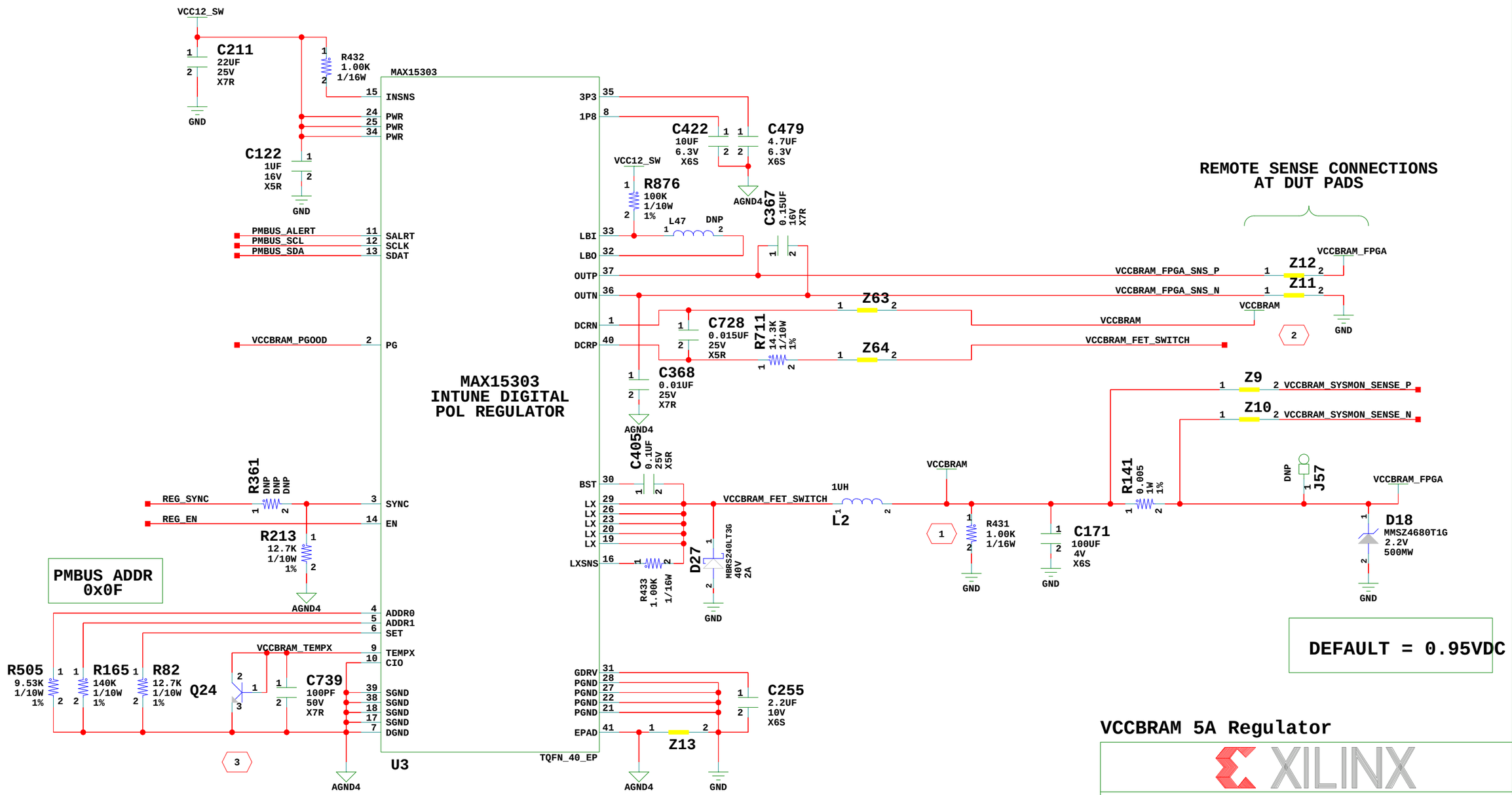

VCCBRAM 5A Regulator

XILINX

TITLE: VCCBRAM 5A Regulator SCHEM, ROHS COMPLIANT HW-U1-KCU105_REV1_1	ASSY P/N: 0431811 PCB P/N: 1280723 SCH P/N: 0381556 TEST P/N: TSS0165
DATE: 05/20/2015:19:32	VER: 1.1
SHEET SIZE: B	REV: 02
SHEET 54 OF 66	DRAWN BY: BF

3 PLACE TEMP COMPENSATION TRANSISTOR ON THE BACKSIDE OF THE BOARD DIRECTLY UNDER OUTPUT INDUCTOR

2 CONNECT ACROSS PINS OF OUTPUT INDUCTOR

1 MINIMUM 1K LOAD REQUIRED. MUST BE CONNECTED BEFORE SENSE RESISTOR TO AVOID CONTRIBUTION TO CURRENT MEASUREMENTS.

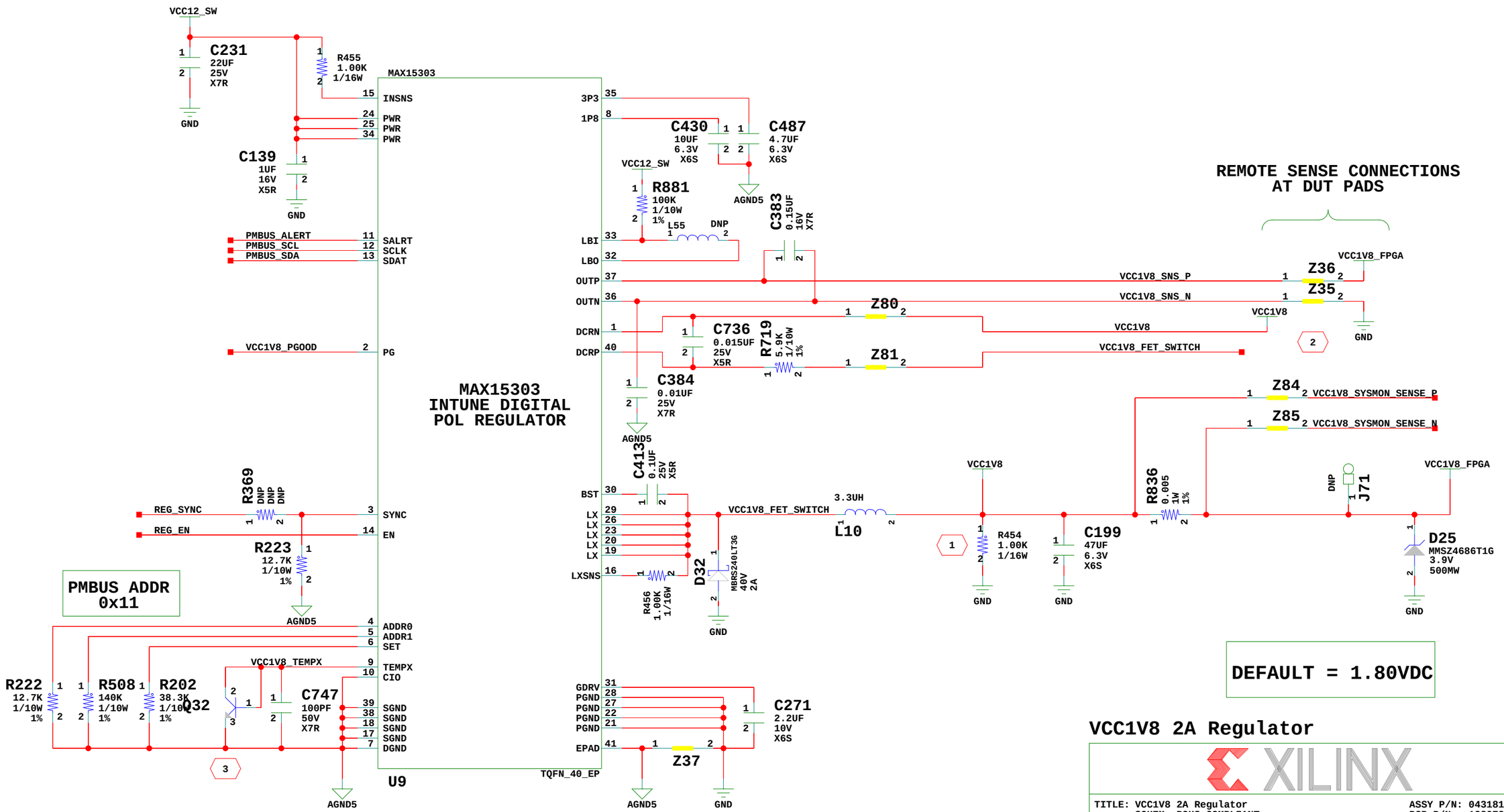

DEFAULT = 1.80VDC

VCC1V8 2A Regulator

XILINX

TITLE: VCC1V8 2A Regulator SCHEM, ROHS COMPLIANT HW-U1-KCU105_REV1_1	ASSY P/N: 0431811 PCB P/N: 1280723 SCH P/N: 0381556 TEST P/N: TSS0165
DATE: 05/20/2015:19:32	VER: 1.1
SHEET SIZE: B	REV: 02
SHEET 55 OF 66	DRAWN BY: BF

3 PLACE TEMP COMPENSATION TRANSISTOR ON THE BACKSIDE OF THE BOARD DIRECTLY UNDER OUTPUT INDUCTOR

2 CONNECT ACROSS PINS OF OUTPUT INDUCTOR

1 MINIMUM 1K LOAD REQUIRED. MUST BE CONNECTED BEFORE SENSE RESISTOR TO AVOID CONTRIBUTION TO CURRENT MEASUREMENTS.

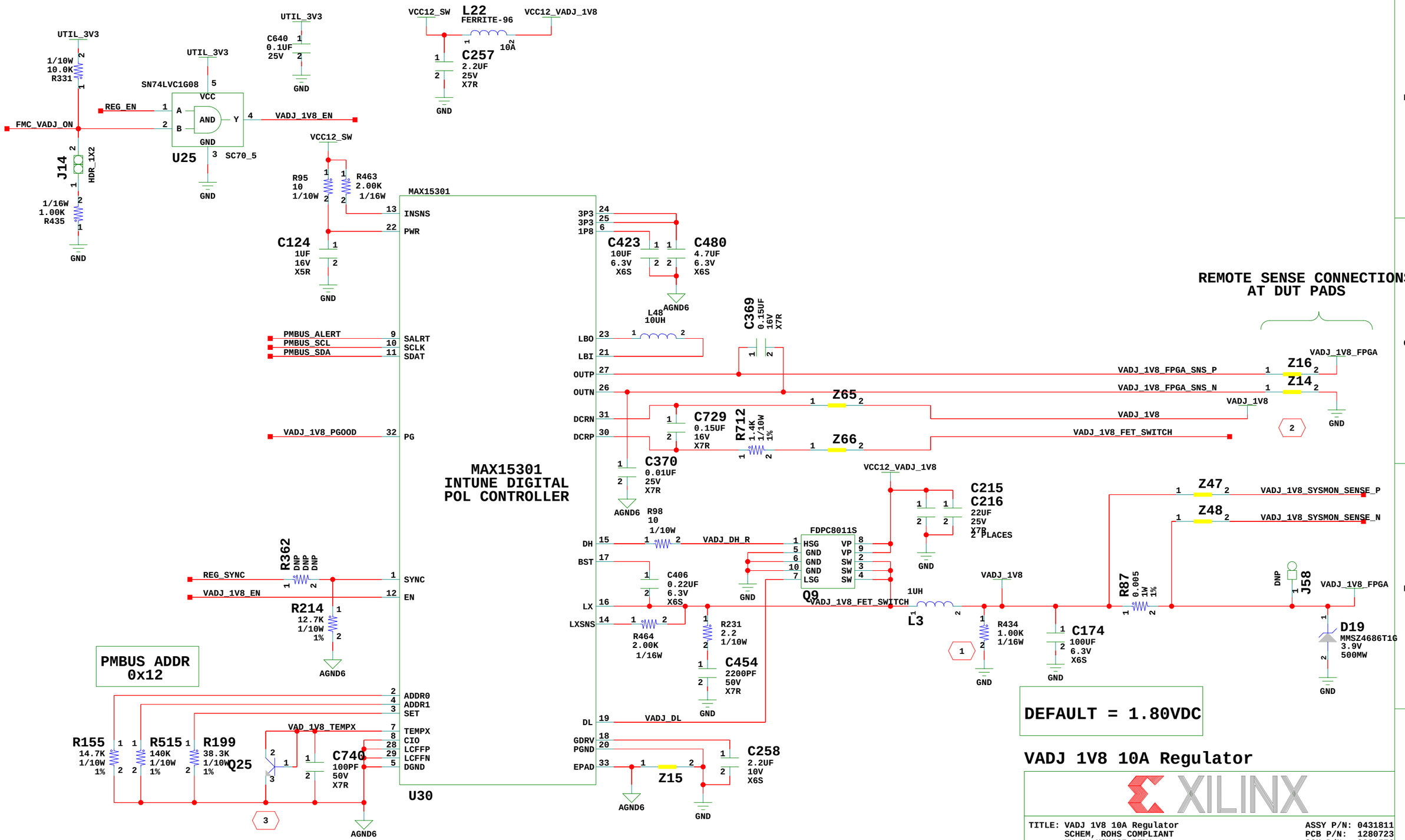

VADJ 1V8 10A Regulator

XILINX

TITLE: VADJ 1V8 10A Regulator SCHEM, ROHS COMPLIANT HW-U1-KCU105_REV1_1	ASSY P/N: 0431811 PCB P/N: 1280723 SCH P/N: 0381556 TEST P/N: TSS0165
DATE: 05/20/2015:19:32	VER: 1.1
SHEET SIZE: B	REV: 02
SHEET 56 OF 66	DRAWN BY: BF

3. PLACE TEMP COMPENSATION TRANSISTOR ON THE BACKSIDE OF THE BOARD DIRECTLY UNDER OUTPUT INDUCTOR

2. CONNECT ACROSS PINS OF OUTPUT INDUCTOR

1. MINIMUM 1K LOAD REQUIRED. MUST BE CONNECTED BEFORE SENSE RESISTOR TO AVOID CONTRIBUTION TO CURRENT MEASUREMENTS.

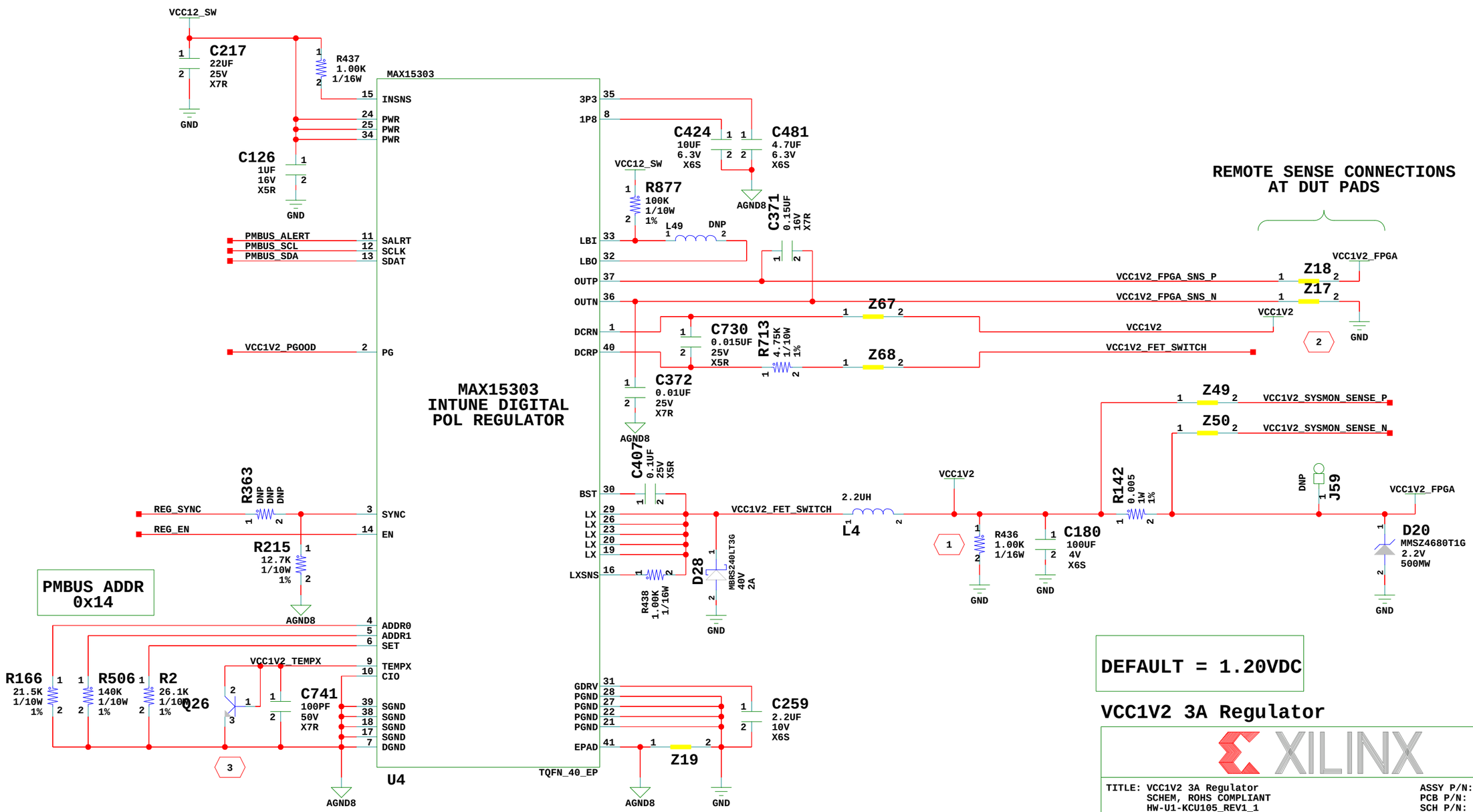

VCC1V2 3A Regulator

XILINX

TITLE: VCC1V2 3A Regulator SCHEM, ROHS COMPLIANT HW-U1-KCU105_REV1_1	ASSY P/N: 0431811 PCB P/N: 1280723 SCH P/N: 0381556 TEST P/N: TSS0165
DATE: 05/20/2015:19:32	VER: 1.1
SHEET SIZE: B	REV: 02
SHEET 57 OF 66	DRAWN BY: BF

3. PLACE TEMP COMPENSATION TRANSISTOR ON THE BACKSIDE OF THE BOARD DIRECTLY UNDER OUTPUT INDUCTOR

2. CONNECT ACROSS PINS OF OUTPUT INDUCTOR

1. MINIMUM 1K LOAD REQUIRED. MUST BE CONNECTED BEFORE SENSE RESISTOR TO AVOID CONTRIBUTION TO CURRENT MEASUREMENTS.

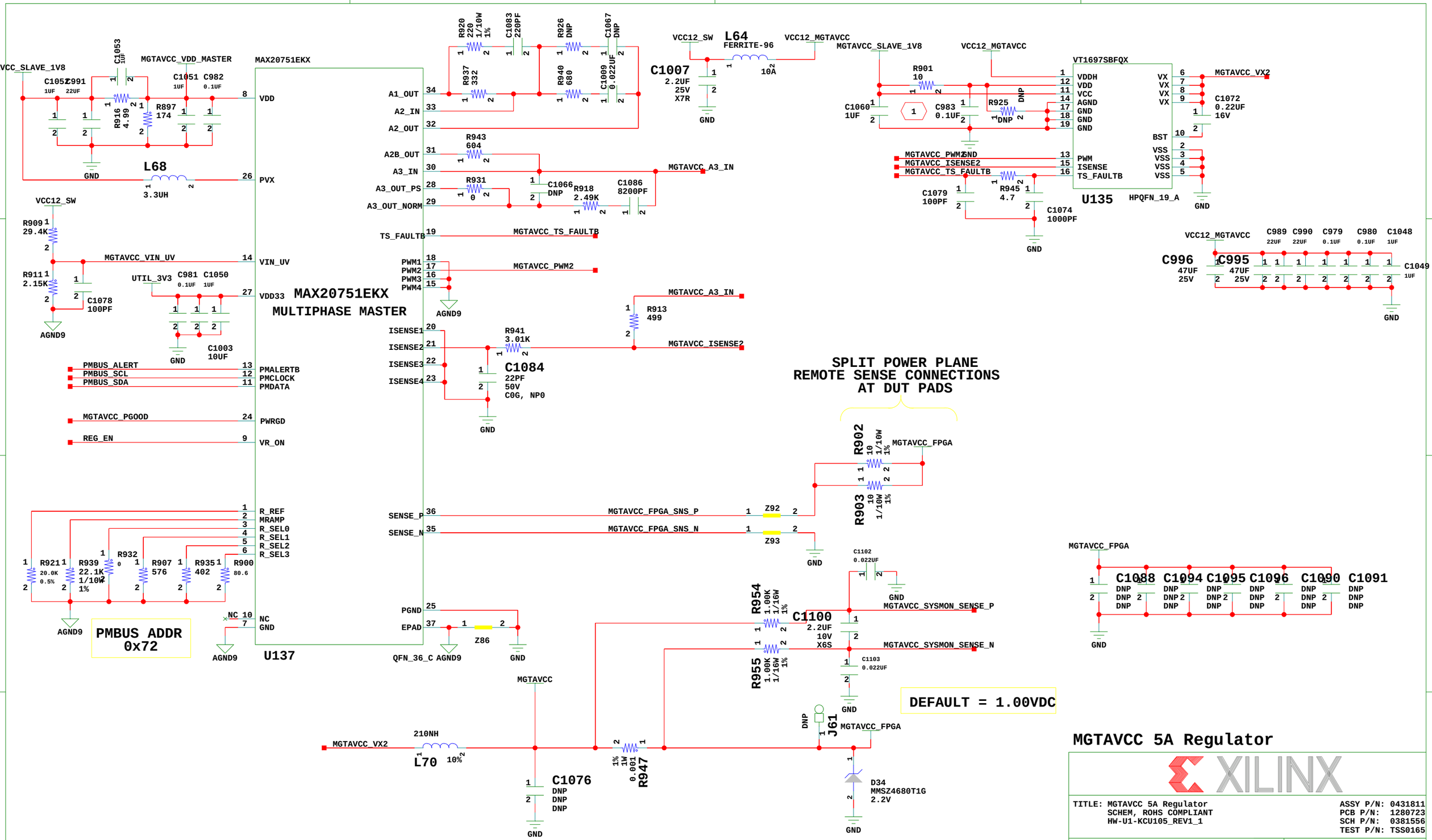

NOTES

1. Capacitors should be placed as close as possible to Pin12 and 14

MGTAVCC 5A Regulator

XILINX

TITLE: MGTAVCC 5A Regulator SCHEM, ROHS COMPLIANT HW-U1-KCU105_REV1_1	ASSY P/N: 0431811 PCB P/N: 1280723 SCH P/N: 0381556 TEST P/N: TSS0165
DATE: 05/20/2015:19:32	VER: 1.1
SHEET SIZE: B	REV: 02
SHEET 58 OF 66	DRAWN BY: BF

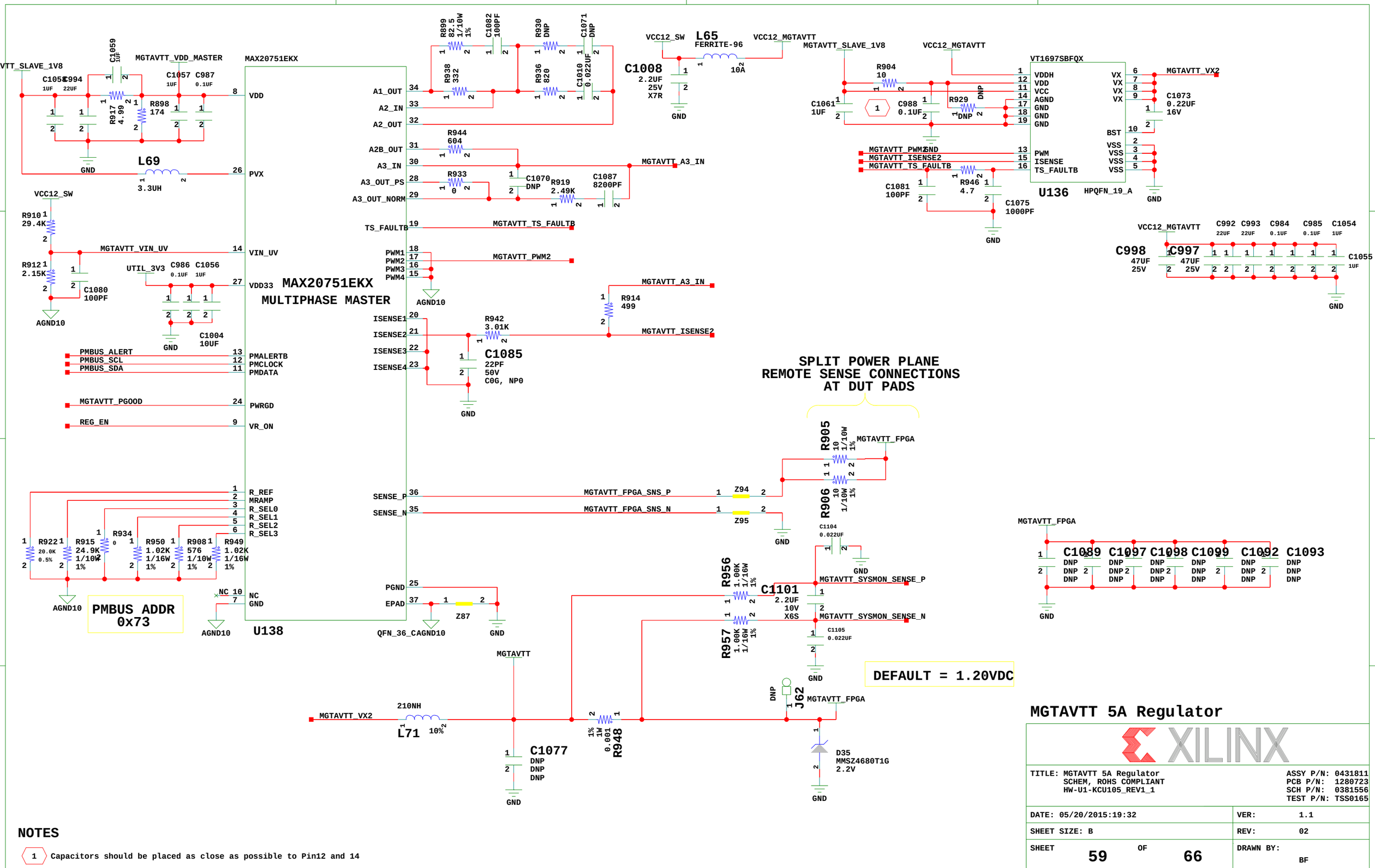

NOTES

1. Capacitors should be placed as close as possible to Pin12 and 14

MGTAVTT 5A Regulator

XILINX

TITLE: MGTAVTT 5A Regulator SCHEM, ROHS COMPLIANT HW-U1-KCU105_REV1_1	ASSY P/N: 0431811 PCB P/N: 1280723 SCH P/N: 0381556 TEST P/N: TSS0165
DATE: 05/20/2015:19:32	VER: 1.1
SHEET SIZE: B	REV: 02
SHEET 59 OF 66	DRAWN BY: BF

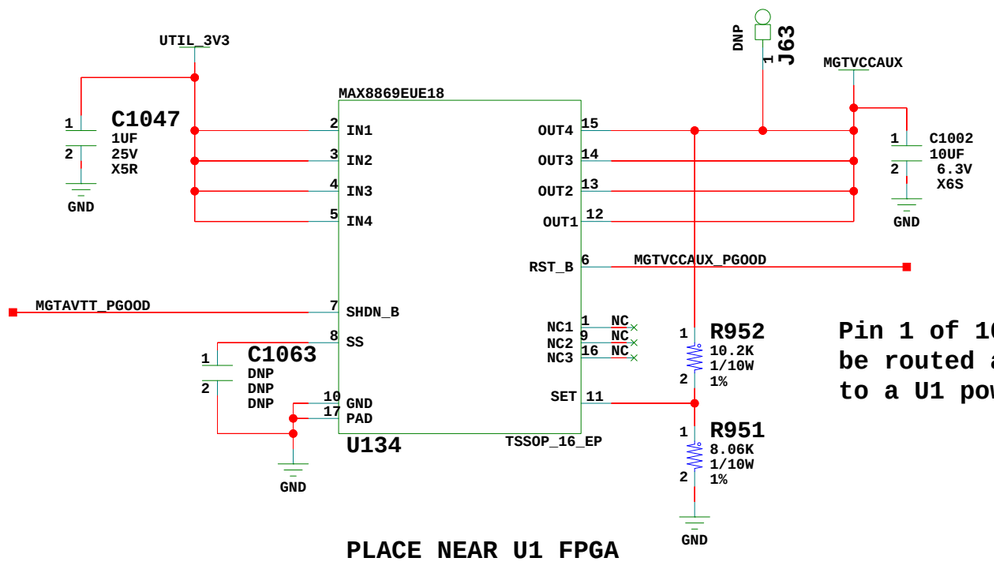

Pin 1 of 10.2K resistor must be routed as a sense line directly to a U1 power pin

PLACE NEAR U1 FPGA

DEFAULT = 1.80VDC

MGTVCCAUX 1A Regulator

XILINX

TITLE: MGTVCCAUX 1A Regulator SCHEM, ROHS COMPLIANT HW-U1-KCU105_REV1_1	ASSY P/N: 0431811 PCB P/N: 1280723 SCH P/N: 0381556 TEST P/N: TSS0165
DATE: 05/20/2015:19:32	VER: 1.1
SHEET SIZE: B	REV: 02
SHEET 60 OF 66	DRAWN BY: BF

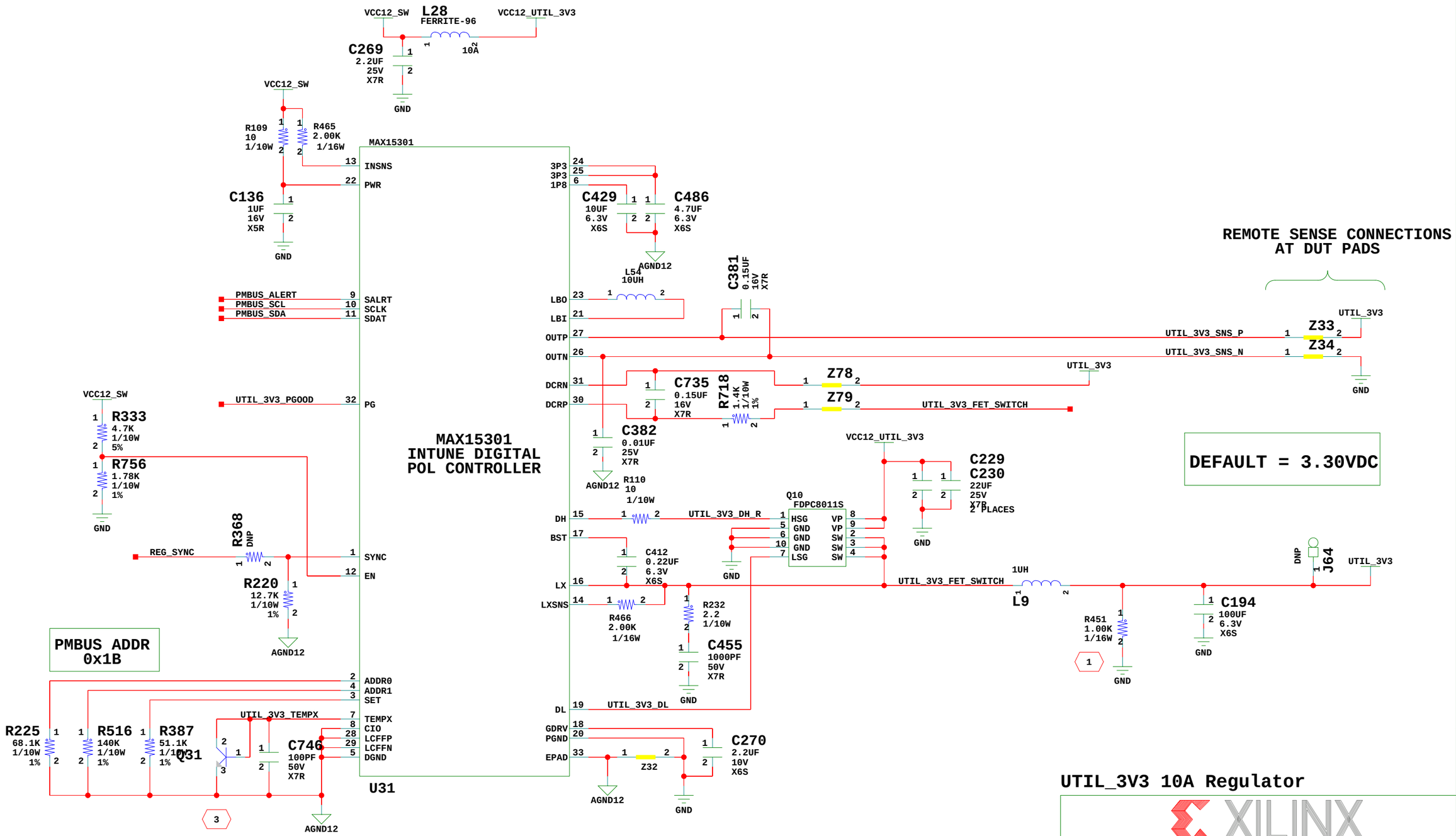

3 PLACE TEMP COMPENSATION TRANSISTOR ON THE BACKSIDE OF THE BOARD DIRECTLY UNDER OUTPUT INDUCTOR

2 CONNECT ACROSS PINS OF OUTPUT INDUCTOR

1 MINIMUM 1K LOAD REQUIRED. MUST BE CONNECTED BEFORE SENSE RESISTOR TO AVOID CONTRIBUTION TO CURRENT MEASUREMENTS.

UTIL_3V3 10A Regulator

XILINX

TITLE: UTIL_3V3 10A Regulator SCHEM, ROHS COMPLIANT HW-U1-KCU105_REV1_1	ASSY P/N: 0431811 PCB P/N: 1280723 SCH P/N: 0381556 TEST P/N: TSS0165
DATE: 05/20/2015:19:32	VER: 1.1
SHEET SIZE: B	REV: 02
SHEET 61 OF 66	DRAWN BY: BF

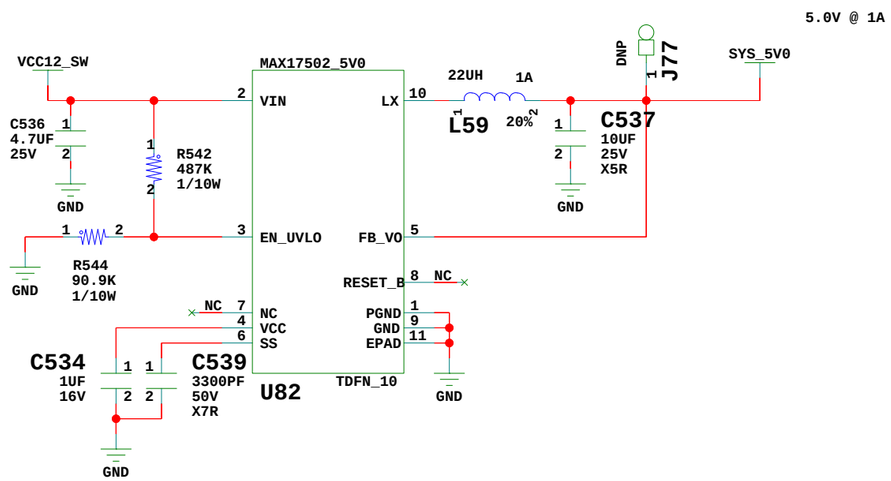

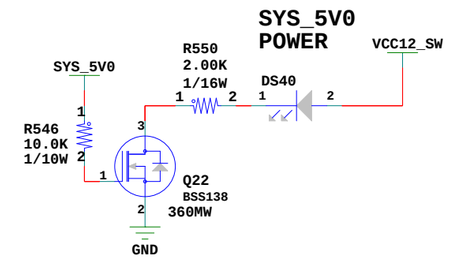

SYS_5V0 Regulator

XILINX

TITLE: SYS_5V0 Regulator SCHEM, ROHS COMPLIANT HW-U1-KCU105_REV1_1	ASSY P/N: 0431811 PCB P/N: 1280723 SCH P/N: 0381556 TEST P/N: TSS0165
DATE: 05/20/2015:19:32	VER: 1.1
SHEET SIZE: B	REV: 02
SHEET 62 OF 66	DRAWN BY: BF

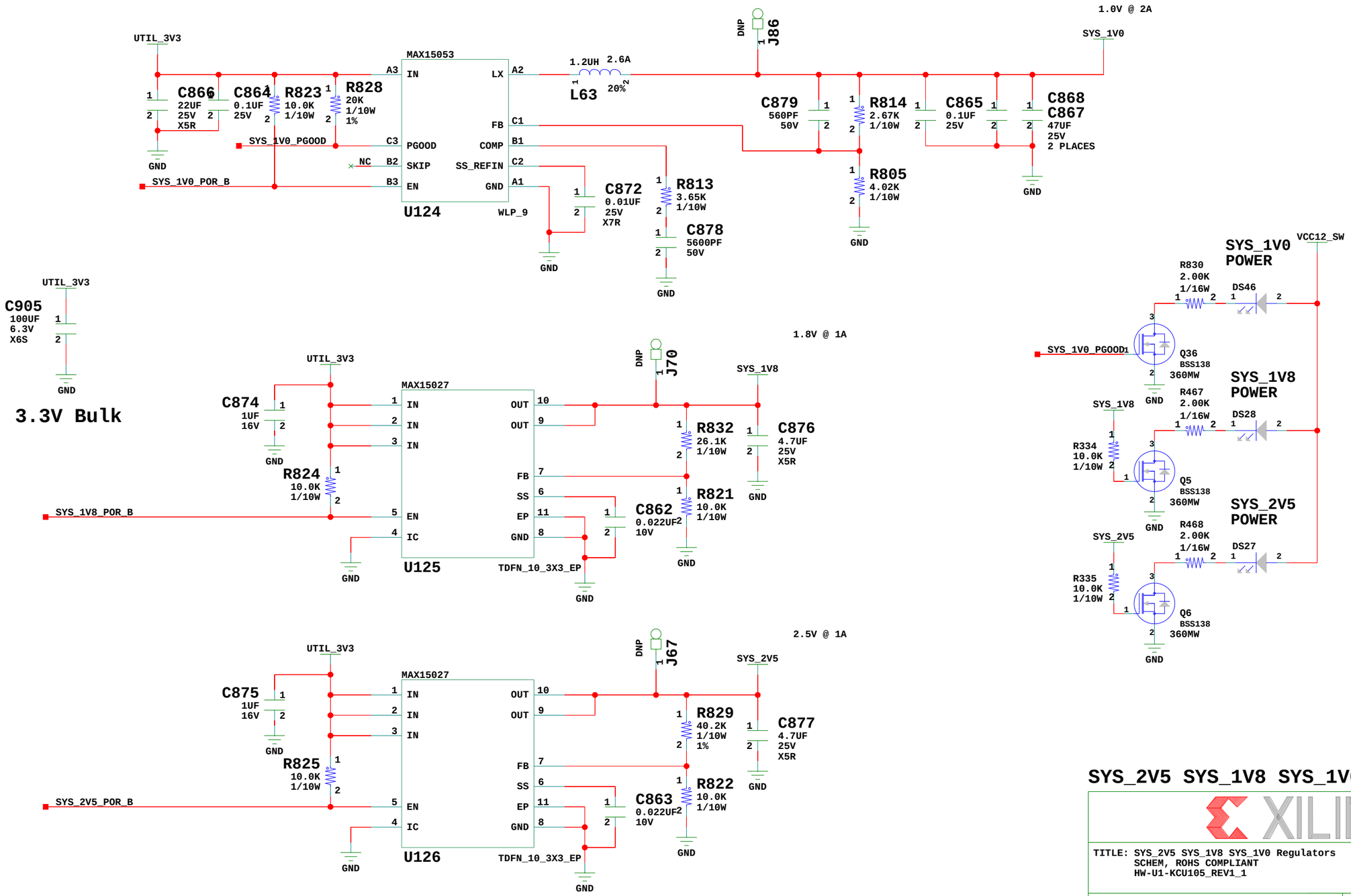

SYS_2V5 SYS_1V8 SYS_1V0 Regulators

XILINX

TITLE: SYS_2V5 SYS_1V8 SYS_1V0 Regulators SCHEM, ROHS COMPLIANT HW-U1-KCU105_REV1_1	ASSY P/N: 0431811 PCB P/N: 1280723 SCH P/N: 0381556 TEST P/N: TSS0165
DATE: 05/20/2015:19:32	VER: 1.1
SHEET SIZE: B	REV: 02
SHEET 63 OF 66	DRAWN BY: BF

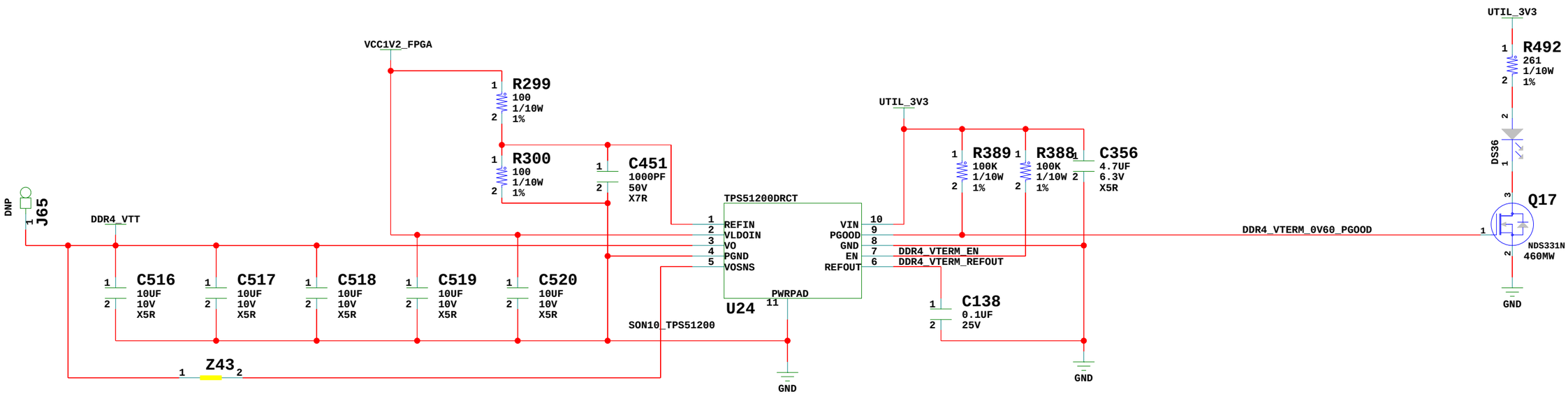

Place sense near DDR4 components

DDR4 Termination Supply

XILINX

TITLE: DDR4 Termination Supply SCHEM, ROHS COMPLIANT HW-U1-KCU105_REV1_1	ASSY P/N: 0431811 PCB P/N: 1280723 SCH P/N: 0381556 TEST P/N: TSS0165
DATE: 05/20/2015:19:32	VER: 1.1
SHEET SIZE: B	REV: 02
SHEET 64 OF 66	DRAWN BY: BF

DS19 must be labeled VADJ Power Good

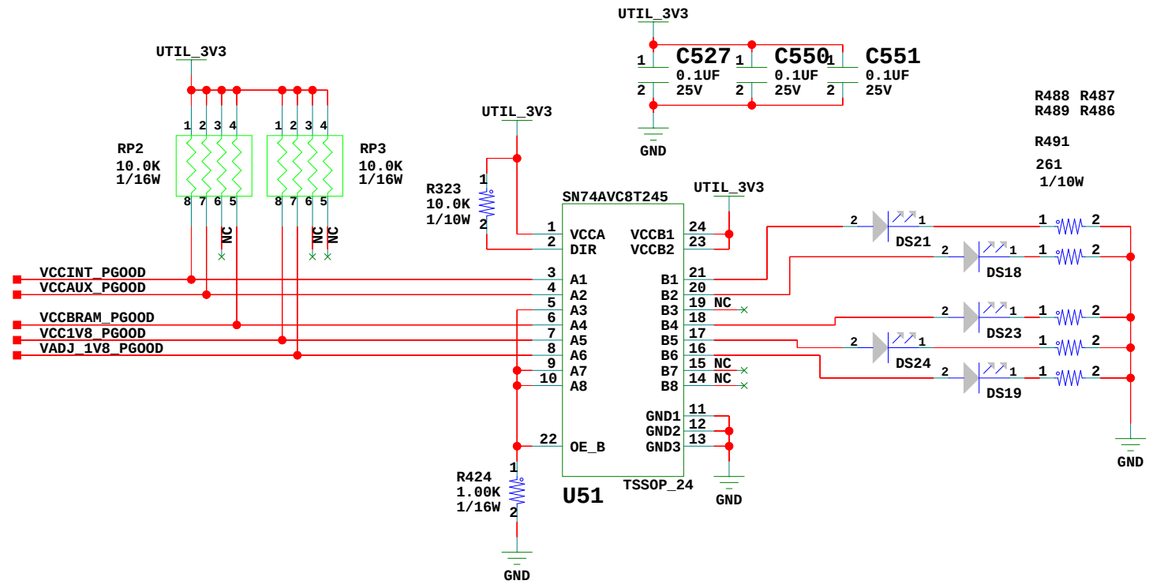

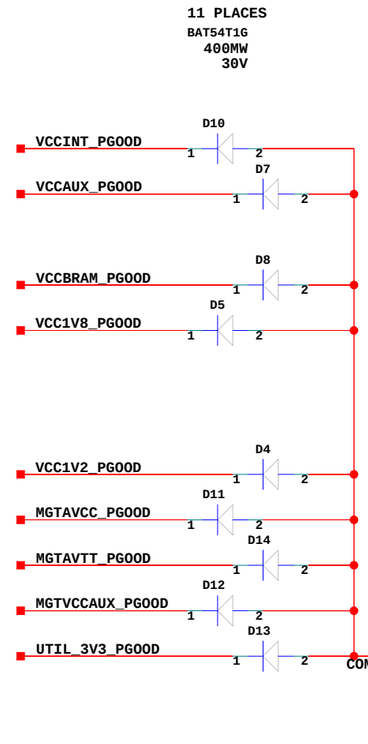

VADJ not included in POWER_GOOD logic

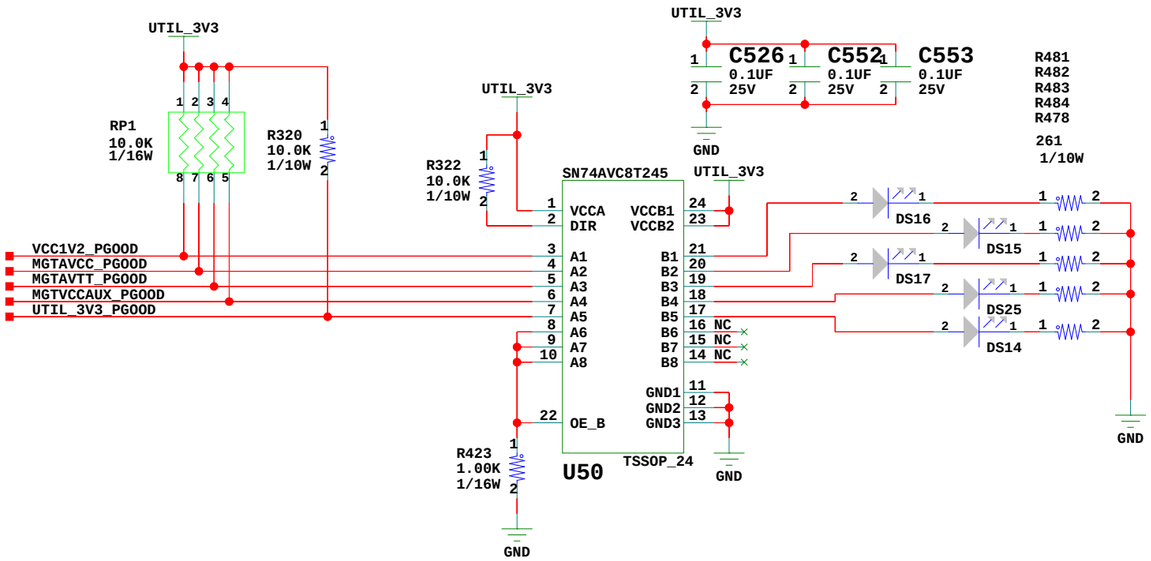

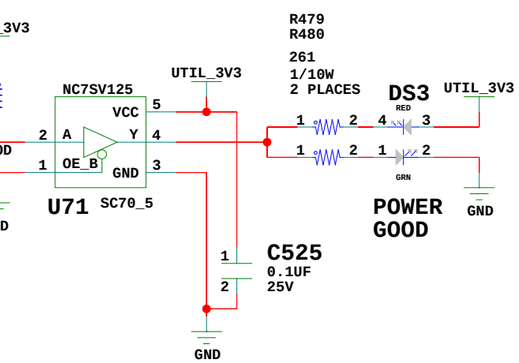

Place LEDs near top right corner of board

Power Status LEDs

XILINX

TITLE: Power Status LEDs SCHEM, ROHS COMPLIANT HW-U1-KCU105_REV1_1	ASSY P/N: 0431811 PCB P/N: 1280723 SCH P/N: 0381556 TEST P/N: TSS0165
DATE: 05/20/2015:19:32	VER: 1.1
SHEET SIZE: B	REV: 02
SHEET 65 OF 66	DRAWN BY: BF

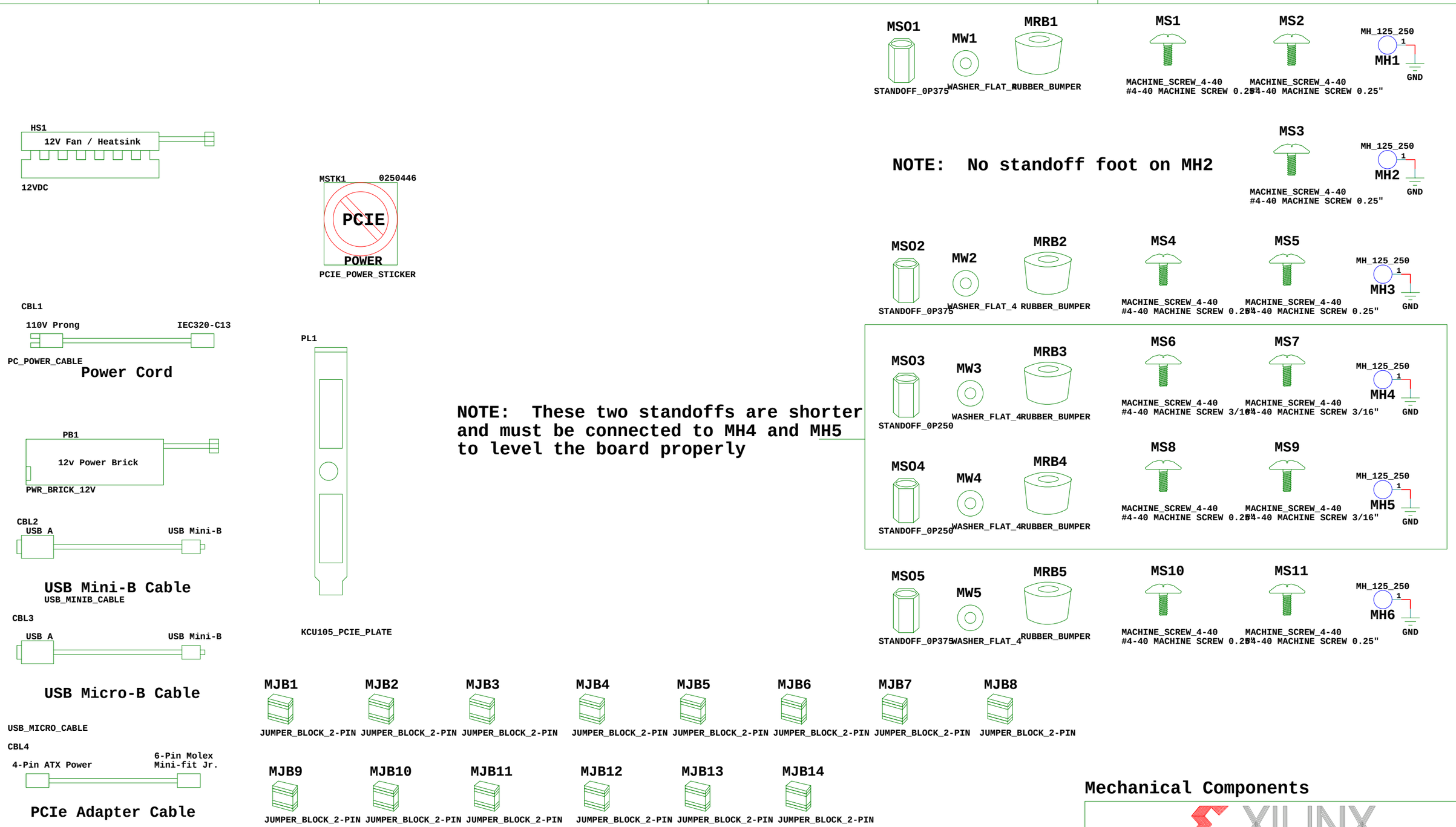

Mechanical Components

XILINX

TITLE: Mechanical Components SCHEM, ROHS COMPLIANT HW-U1-KCU105_REV1_1	ASSY P/N: 0431811 PCB P/N: 1280723 SCH P/N: 0381556 TEST P/N: TSS0165
DATE: 05/20/2015:19:32	VER: 1.1
SHEET SIZE: B	REV: 02
SHEET 66 OF 66	DRAWN BY: BF