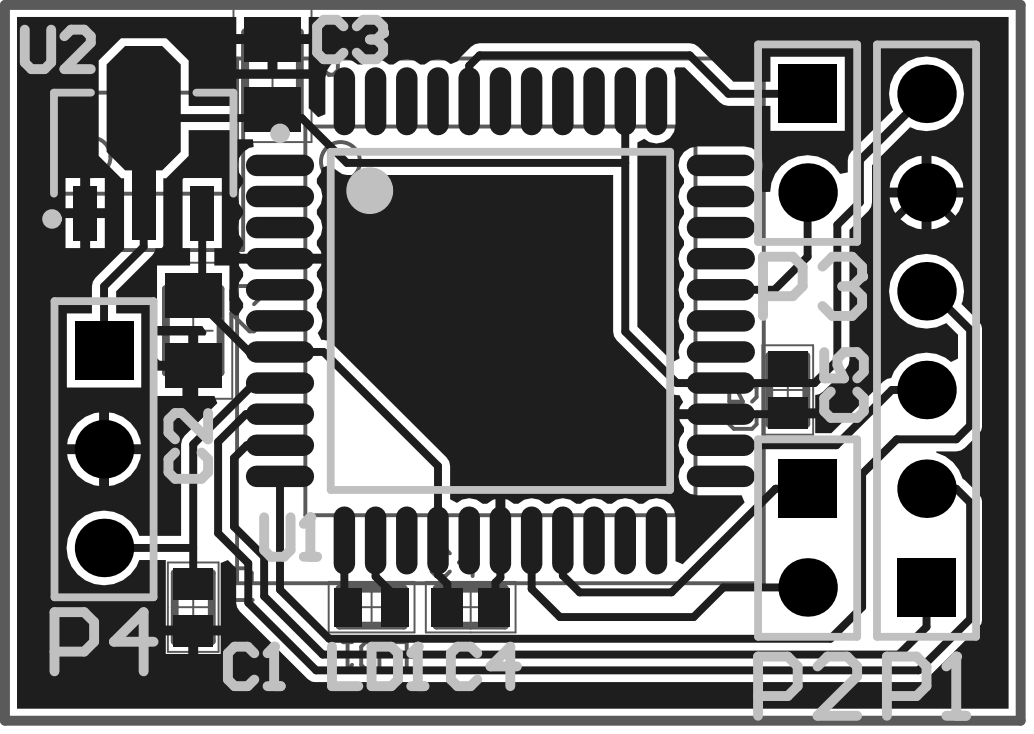
U2
C3
P3
C5
C2
U1
P4
C1
LED1
C4
P2
P1

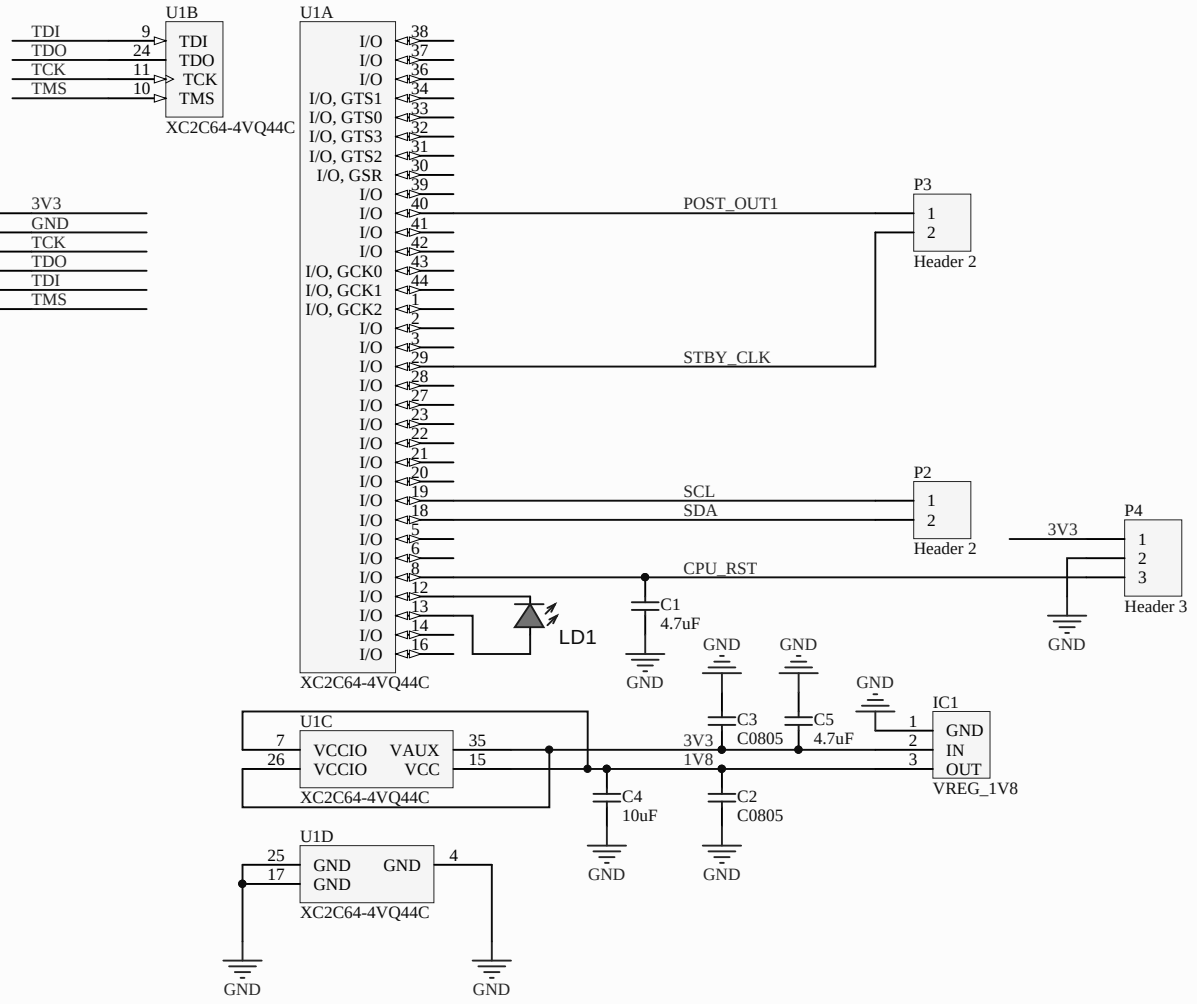

Title		
Size A4	Number	Revision
Date: 2/26/2021	Sheet of	
File: F:\BACKUP-4-12-2012\..\main.SchDoc	Drawn By:	

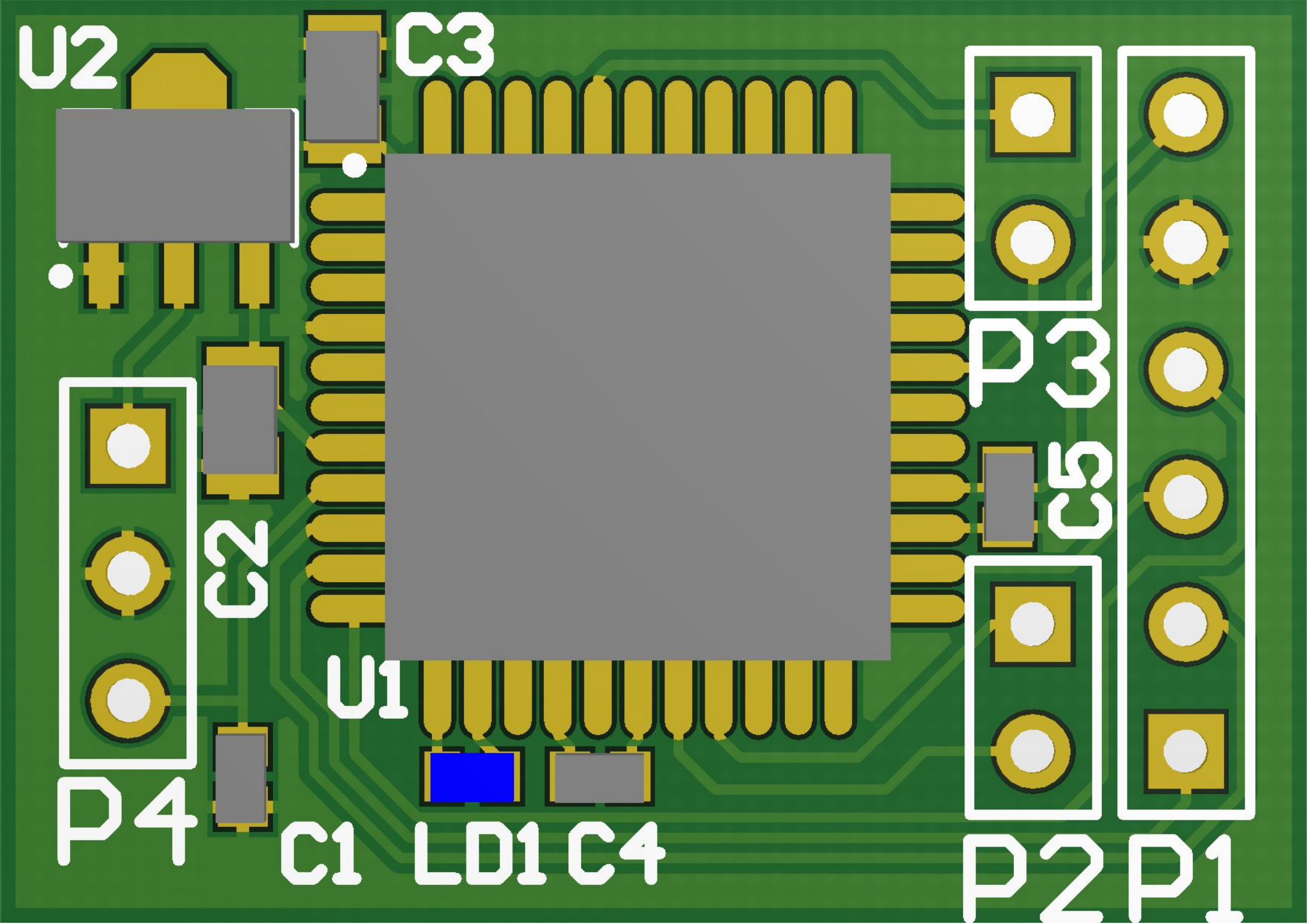
U2
C3
P3
C5
C2
U1
P4
C1
LD1
C4
P2
P1