Gujarat Council on Science & Technology
Dept. of Science & Technology, Govt. of Gujarat

Technical Report for
Level-2 Proof of Concept (PoC) Stage
for
ROBOFEST-GUJARAT 5.0 Competition

Level: Senior
Category: Autonomous Underwater Vehicle
Application No.: R520251182
Name of Mentor: Pramod Sreedharan
Name of Institute: Amrita Viswa Vidyapeetham, Amritapuri Campus
Mobile No.: 9347682107
E-mail Id: : raviganesh812@gmail.com

1. **Perspective View of the Robot**

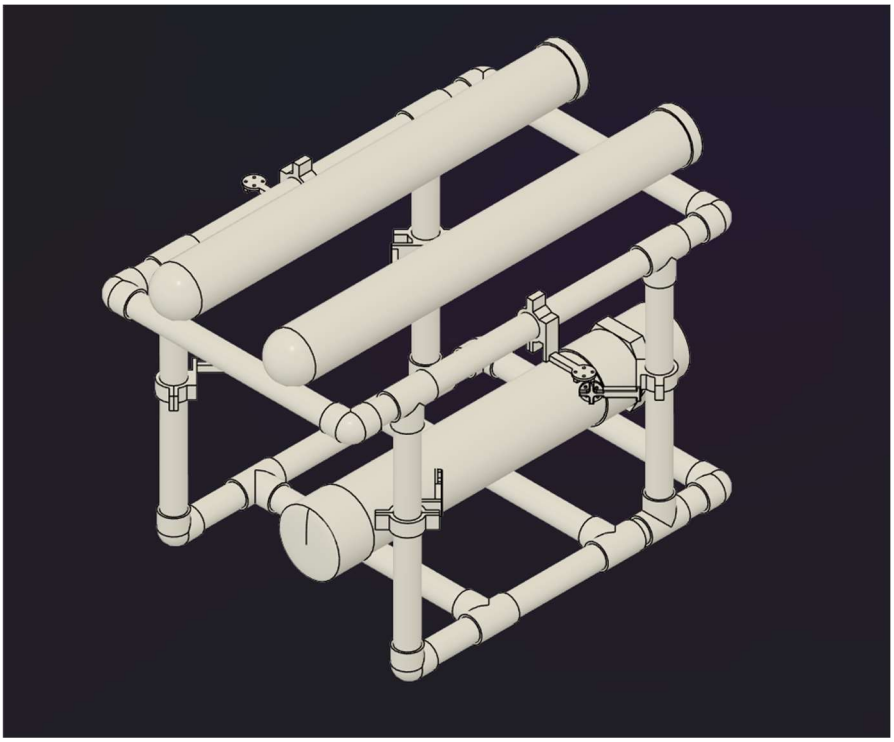

- **Description:**

The proposed robot is an **Autonomous Underwater Vehicle (AUV)** designed for underwater exploration and intervention tasks. It features a **hydrostatically stable PVC hull** with an acrylic front dome for optical clarity. The vehicle is equipped with **six underwater thrusters** arranged in a vectored configuration for full motion control in surge, sway, heave, and yaw. Core intelligence is managed by a **Raspberry Pi 5** running **ROS 2 Humble**, handling sensor fusion, mission planning, and manipulator control. A **Pixhawk 2.4.8** flight controller provides low-level thruster control and stabilization. The system integrates multiple sensors including stereo cameras, depth sensors, hydrophones, and leak detectors for comprehensive environmental perception and task execution

a. **Design Outlay and Description:**

- The Autonomous Underwater Vehicle (AUV) is designed as a compact and modular robotic system capable of stable underwater navigation, depth control, and visual inspection. The overall design

integrates a rigid mechanical frame, a six-thruster propulsion configuration, and a balanced mass distribution to ensure stability and maneuverability in a submerged environment. The thrusters are symmetrically arranged using a combination of clockwise and counter-clockwise motors, enabling full control over all degrees of freedom and minimizing unwanted torque effects. The mechanical layout also accommodates a sealed electronics enclosure, battery placement for a low center of gravity, and front-mounted sensors and manipulator for operational tasks.

- The control architecture of the AUV follows a layered design approach, where low-level control and stabilization are handled by a Pixhawk flight controller running ArduSub firmware, while high-level processing and communication are managed by a Raspberry Pi running BlueOS. Sensor inputs such as depth and orientation are continuously processed to generate real-time control outputs for precise motion control. Communication with the ground control station is achieved through Ethernet using QGroundControl, enabling monitoring, configuration, and mission execution. This integrated design ensures reliable operation, scalability, and suitability for both manual and autonomous underwater missions.

b. **Description of Hardware:**

This section describes the complete hardware architecture of the Autonomous Underwater Vehicle (AUV). The system is designed to provide stable underwater propulsion, precise control, sensing, and onboard computation using commercially available components.

b1. Mechanical System

The AUV is designed with a rigid frame structure with PVC pipes that supports propulsion units, electronics enclosure, battery mounting, and a front-facing manipulator. The frame ensures structural integrity while minimizing hydrodynamic drag during underwater operation.

Frame and Layout

- The propulsion motors are symmetrically mounted around the vehicle's center of mass to ensure balanced thrust and maneuverability.
- Electronics such as the Pixhawk, Raspberry Pi, power distribution board, and power module are housed inside a sealed waterproof enclosure.
- Batteries are mounted low in the frame to improve stability and maintain a low center of gravity.
- A front-mounted camera provides visual feedback for navigation and manipulation tasks.
- A servo-actuated manipulator is attached at the front of the vehicle for object interaction.

b2. **Drive System & Controller**

Propulsion Motors

The AUV uses a total of six Brushless DC (BLDC) motors for underwater propulsion:

- **3 × CW BLDC Motors** (920 KV)
- **3 × CCW BLDC Motors** (920 KV)

These motors are arranged in pairs to counteract torque effects and improve directional stability. The use of both clockwise (CW) and counter-clockwise (CCW) motors eliminates unwanted rotational moments during operation.

Key Features: - High efficiency and reliability - Suitable for continuous operation - Capable of providing sufficient thrust for underwater maneuvering.

Electronic Speed Controllers (ESCs)

- **6 × 30A ESCs** are used to control the speed and direction of the BLDC motors.
- Each ESC receives PWM control signals from the Pixhawk autopilot.
- ESCs are powered directly from the battery through the power distribution board.

Functions of ESCs: - Converts DC battery power into three-phase AC for BLDC motors - Enables precise motor speed control - Supports rapid response to control commands

Flight Controller / Autopilot

- **Pixhawk 2.4.8** is used as the primary control unit.
- Runs **ArduSub firmware**, specifically designed for underwater vehicles.
- Handles real-time control tasks such as:
  - Stabilization
  - Thruster mixing
  - Sensor fusion
  - Navigation and depth control

Companion Computer

- **Raspberry Pi 4 Model B** acts as the companion computer.
- Runs **BlueOS**, which manages:
  - MAVLink communication
  - Video streaming
  - Network connectivity
  - High-level control and extensions

The Raspberry Pi communicates with the Pixhawk via USB/UART using the MAVLink protocol.

Manipulator Control

- A **servo motor** is used to actuate the manipulator mechanism.
- Controlled directly by the Pixhawk through a PWM output.
- Enables grasping or interaction with underwater objects.

b3. Electronics & Instrumentation:

Power System

a) Battery

- 2 × 14.8V (4S) 5200 mAh LiPo batteries are used.
- High discharge rating (40C–80C) ensures sufficient current for motors and electronics.

b) Power Distribution Board (PDB)

- Distributes battery power to:
  - ESCs
  - Power module
- Ensures organized and safe power routing.

c) Power Module

- Steps down battery voltage and supplies regulated power to the Pixhawk.
- Provides voltage and current sensing for real-time monitoring.

d) Computing and Control Electronics

Component	Function
Raspberry Pi 4	Companion computer, BlueOS, video processing
Pixhawk 2.4.8	Autopilot, motor control, sensor fusion
ESCs	Motor control
PDB	Power distribution

Sensors

a) Camera

- Raspberry Pi camera module is used for real-time underwater vision.
- Mounted at the front of the vehicle.
- Used for navigation, inspection, and object detection.

b) Pressure Sensor

- MS5837-02BA waterproof pressure sensor is used.
- Provides accurate depth measurement.
- Communicates with the Pixhawk via I2C.
- Functions: - Depth estimation - Altitude hold - Safety monitoring

b4. Working Level Software

Raspberry Pi – mission computer

- **OS:** BlueOS
- **Framework:** ROS2 – MAVRos, using python and C
- **Communication protocols:** MAVLink
- **Vision system:** OpenCV
- Qground control, Mission planner

Pixhawk 2.4.8 - Flight Controller

- **Firmware –** ArduSub

1. **Complete and exhaustive listing of all the hardware / component / equipment (electronics and mechanical)**

A. **Controller of the Robot:**

Electrical assembly & wiring

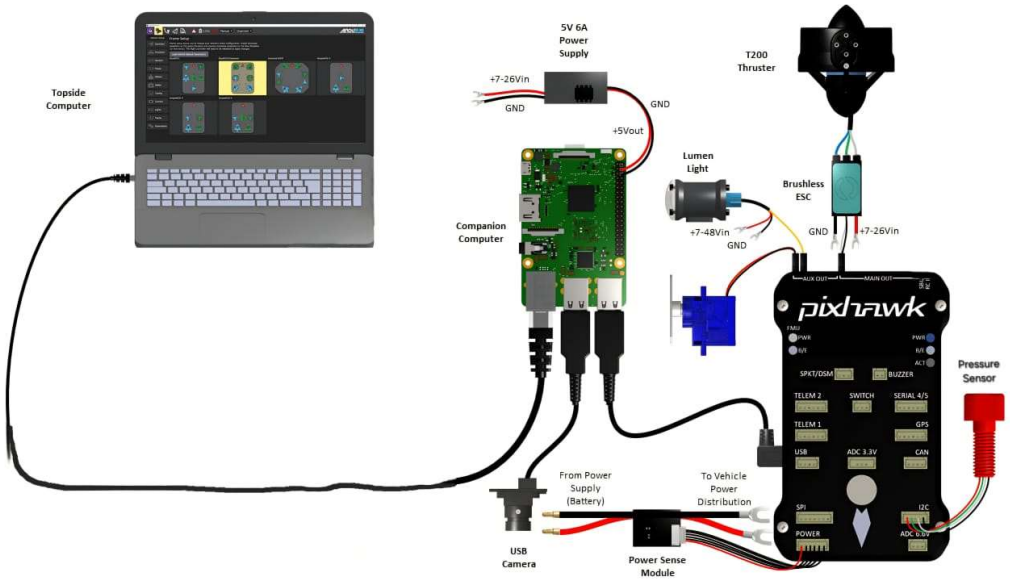

Power Connections

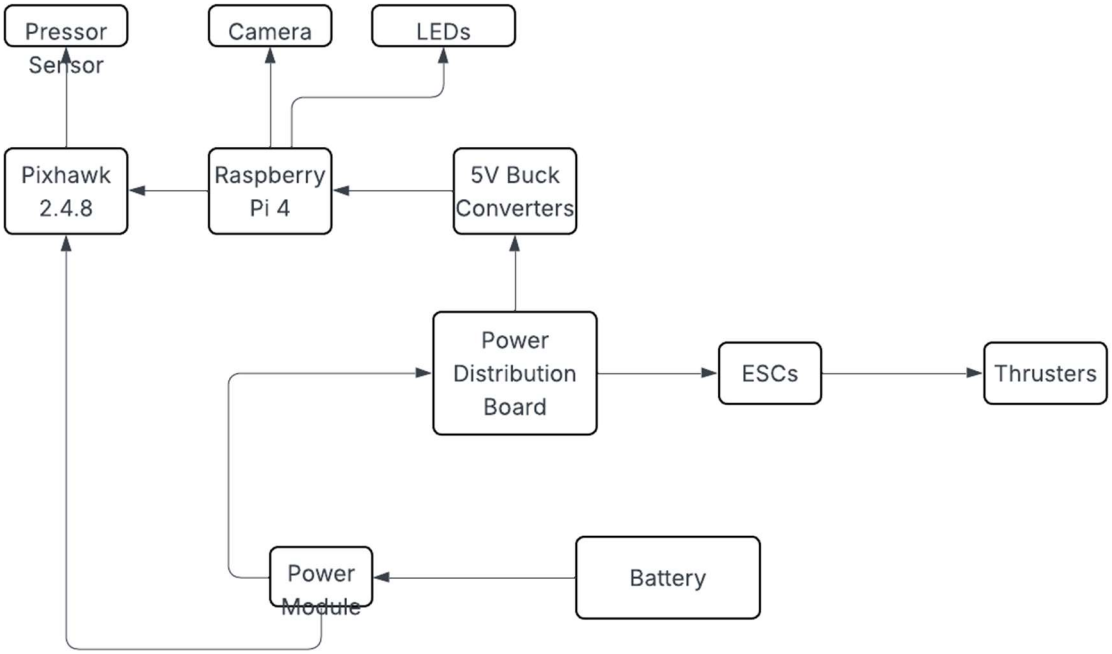

List Of Components:

Sln.	Component	Model / Specification	Quantity	Description
1	Brushless DC Motor (CCW)	Pro Range DX2312, 960 KV (CCW)	3	Provides thrust for propulsion and maneuvering in counter-clockwise direction; used for balanced thrust in AUV
2	Brushless DC Motor (CW)	Pro Range DX2312, 960 KV (CW)	3	Clockwise rotating motors paired with CCW motors to eliminate torque imbalance
3	Electronic Speed Controller (ESC)	Simplifly ESC, 30A	6	Controls speed and direction of BLDC motors based on PWM signals from Pixhawk
4	Servo Motor	Standard RC Servo Motor	1	Used for manipulator actuation to grip or interact with underwater objects
5	Lithium Polymer Battery	GenX Power 11.1V (3S), 5200mAh, 40C	2	Primary power source supplying high current for motors and onboard electronics

6	Power Module	Pixhawk Power Module (Voltage & Current Sensor)	1	Regulates power to Pixhawk and monitors battery voltage/current
7	Power Distribution Board (PDB)	Drone Power Distribution Board	1	Distributes battery power evenly to all ESCs and onboard electronics
8	Flight Controller	Pixhawk 2.4.8	1	Main autopilot unit responsible for stabilization, navigation, and control
9	Companion Computer	Raspberry Pi 4 Model B - 8gb ram	1	Runs BlueOS, handles vision processing, networking, and high-level control
10	Camera Module	Raspberry Pi Camera Module	1	Provides live video feed for navigation, monitoring, and inspection
11	Pressure Sensor	MS5837-2BA Waterproof Pressure Sensor	1	Measures water pressure to calculate depth of the AUV
12	Ethernet Cable	CAT6 Ethernet Cable	1	Used for communication between Raspberry Pi and surface control station

B. Mechanical Components

a. Mechanical Modules

The AUV features a rigid, lightweight frame designed to support propulsion units, electronics, batteries, sensors, and a manipulator. Six thrusters are symmetrically mounted to enable full 6-degree-of-freedom motion. Dedicated mounts are provided for the Pixhawk, Raspberry Pi, camera, and pressure sensor, ensuring stability and easy maintenance.

b. Fabrication Components

The frame and mounts are fabricated using aluminum, PVC, and 3D-printed components for strength and corrosion resistance. Waterproof enclosures protect electronic components, while stainless-steel fasteners and brackets ensure secure assembly in underwater conditions.

c. Tools and Equipment Used

Basic fabrication tools such as drills, screwdrivers, soldering iron, multimeter, and 3D printer are used for assembly, wiring, and waterproof sealing.

C. Motor System Used & Assembly

The AUV uses six D2212 920KV BLDC motors (three CW and three CCW) controlled by 30A ESCs. This balanced configuration minimizes torque effects and improves stability. Motors are securely mounted to the frame, with ESCs connected to a power distribution board and controlled via PWM signals from the Pixhawk, enabling precise thrust and manoeuvring control.

2. **Complete and exhaustive listing of all the software used in Robo-making**

A.Software Used

A1. BlueOS

Why BlueOS for an AUV

- **Advantages over standard Raspberry Pi OS**
  - Pre-configured MAVLink routing
  - Built-in ArduSub support
  - Web-based UI (no monitor needed)
  - Integrated video streaming
  - Designed specifically for ROV/AUV use

Hardware Requirements

- **Mandatory**
  - Raspberry Pi 4 Model B (8GB)
  - Pixhawk (Pixhawk 2.4.8)
  - SD card
  - Ethernet cable
  - Stable 5V 3A power supply for Pi

- **Additional**
  - USB camera / CSI camera
  - Depth sensor (I2C)
  - Leak sensor

Companion sensors

- **Power System Design**

```
Battery (3S / 4S Li-ion or LiPo)
    |
    |→ Buck Converter (5V 3–5A)
    |      |
    |      → Raspberry Pi 4
    |
    |→ Power Module
           |
           → Pixhawk
```

Flashing ArduSub

BlueOS → Autopilot Firmware - Select ArduSub - Select Pixhawk model – Flash firmware

Pixhawk Connection

- Pixhawk USB → Pi USB

MAVLink in BlueOS

- **MAVLink Flow**

  Pixhawk ⇄ BlueOS ⇄ Laptop (QGC)

A2. QGroundControl:

QGroundControl (QGC) is the primary Ground Control Station (GCS) software used for monitoring, controlling, and configuring the Autonomous Underwater Vehicle (AUV). In this

system, QGroundControl interfaces with the Pixhawk autopilot running ArduSub firmware through the Raspberry Pi companion computer running BlueOS. It provides a unified graphical interface for vehicle setup, real-time telemetry visualization, mission planning, and manual control.

Role of QGroundControl in the AUV System

In the proposed AUV architecture, QGroundControl functions as the operator-facing control and monitoring platform. It does not directly control motors or sensors but communicates with the Pixhawk via MAVLink messages routed through BlueOS. QGC enables the operator to supervise vehicle behavior, issue commands, and visualize system health in real time.

Connection and Initialization Process

1. The Raspberry Pi and Pixhawk are powered ON.
2. BlueOS boots and establishes MAVLink communication with the Pixhawk.
3. The laptop is connected to the Raspberry Pi using an Ethernet cable.
4. QGroundControl is launched on the laptop.
5. QGC automatically connects to the AUV and displays vehicle status.
   No manual port configuration is required, as BlueOS manages MAVLink routing.

The communication chain is established as follows:

QGroundControl (Laptop)
⇅ MAVLink (UDP)
Raspberry Pi 4 (BlueOS)
⇅ MAVLink (USB/UART)
Pixhawk 2.4.8 (ArduSub)

Operational Control Modes

QGroundControl allows the operator to select and monitor different control modes supported by ArduSub:

- Manual Mode: Direct operator control of thrusters
- Stabilized Mode: Automatic attitude stabilization
- Depth Hold Mode: Maintains constant depth using pressure sensor feedback
- Autonomous / Assisted Modes: Executes predefined behaviors or missions
  Mode changes are transmitted as MAVLink commands.

Real-Time Monitoring and Telemetry

QGroundControl displays real-time telemetry data, including:

- Vehicle attitude (roll, pitch, yaw)
- Depth and vertical velocity
- Battery voltage and current
- Thruster output levels
- Sensor health and system status
  Graphical indicators and warnings assist the operator in maintaining safe operation.

Mission Planning and Control

For semi-autonomous operation, QGroundControl enables:

- Creation of waypoint-based missions
- Depth and speed constraints

- Uploading missions to the Pixhawk
- Starting, pausing, or aborting missions

Logging and Post-Mission Analysis

- QGroundControl records telemetry logs during operation.
- Logs are used for performance analysis, debugging, and parameter tuning.
- Recorded data assists in improving control accuracy and mission reliability.

Motor Setup

- The direction that the motors will spin depends on how the vehicle and motors were assembled, so each motor's forward/reverse direction must be configured in software.

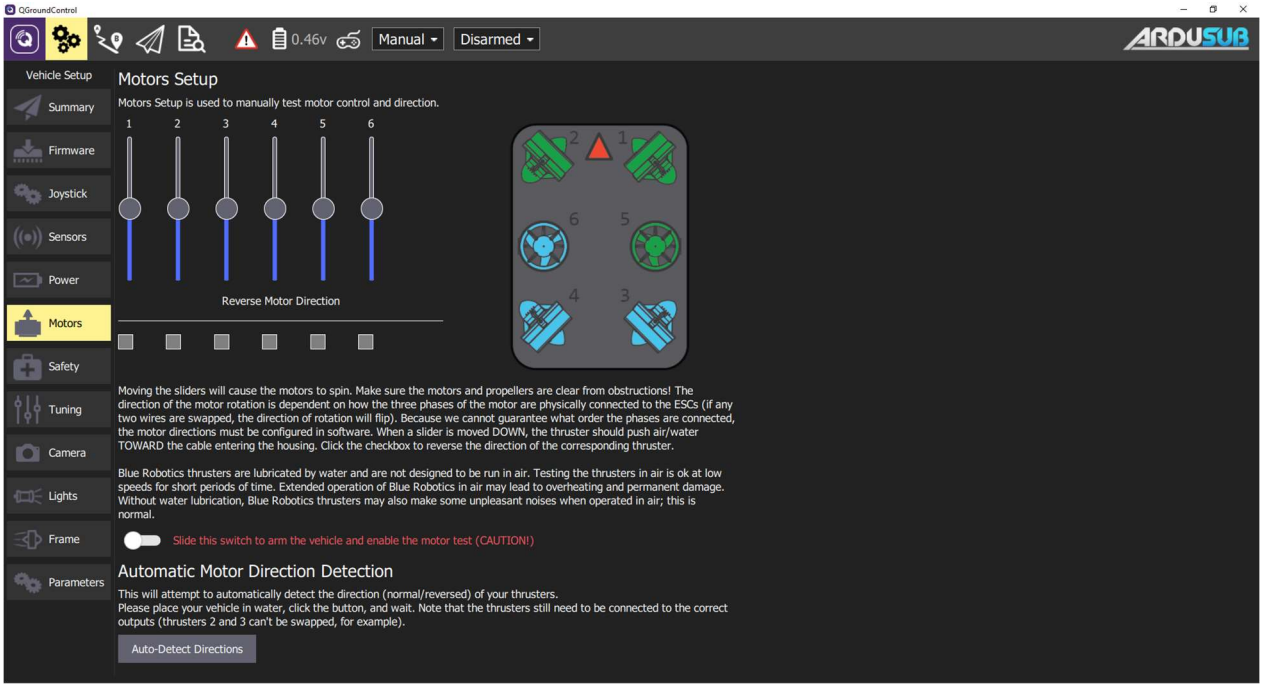

The Sensors Setup page allows users to calibrate the vehicle's accelerometer, compass, pressure sensor.

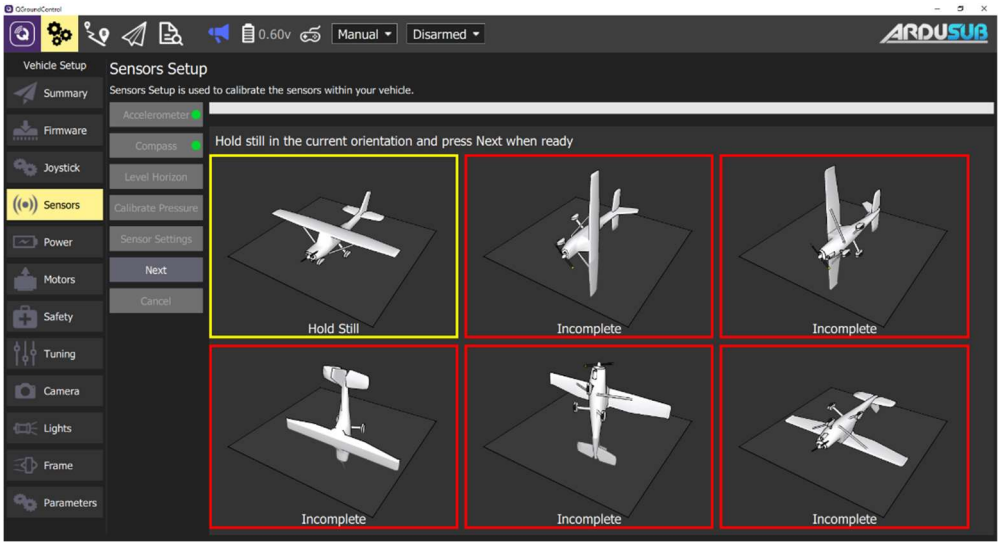

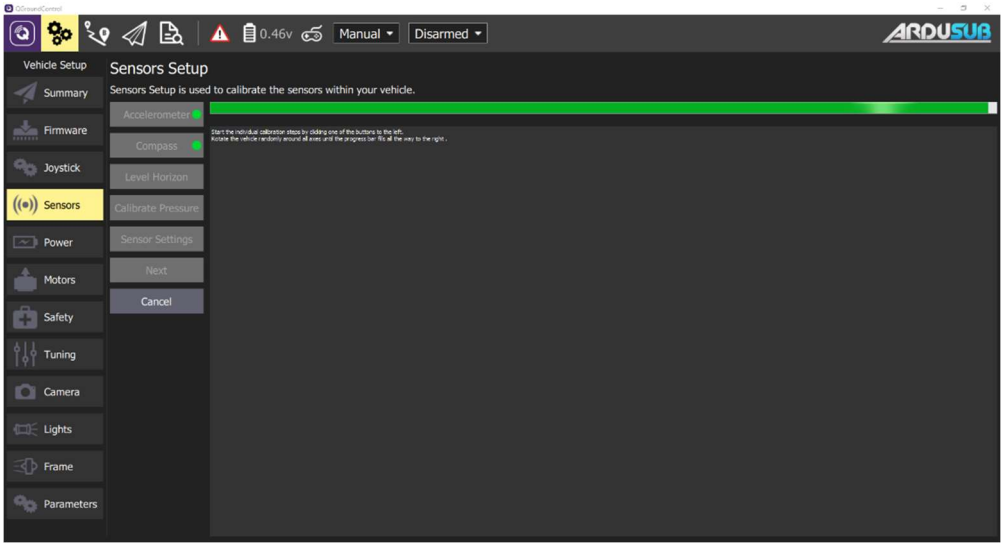

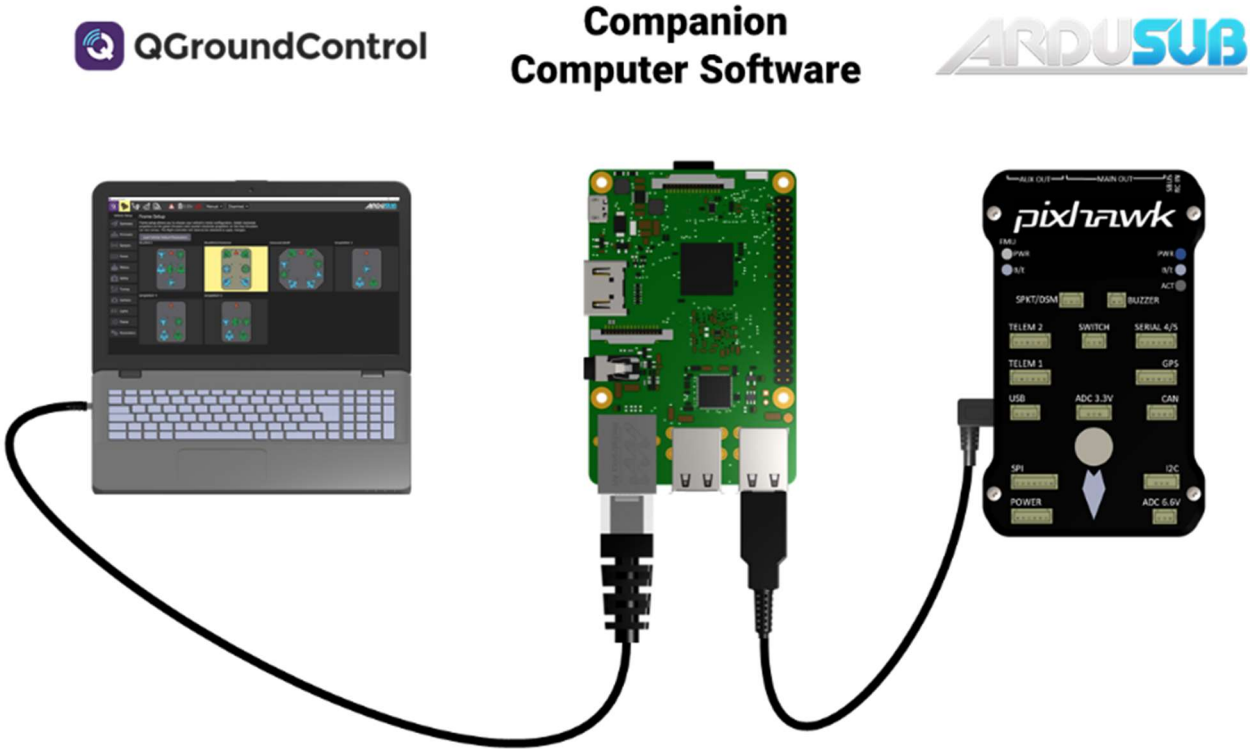

Here is a technical block diagram of the main software components and their interactions:

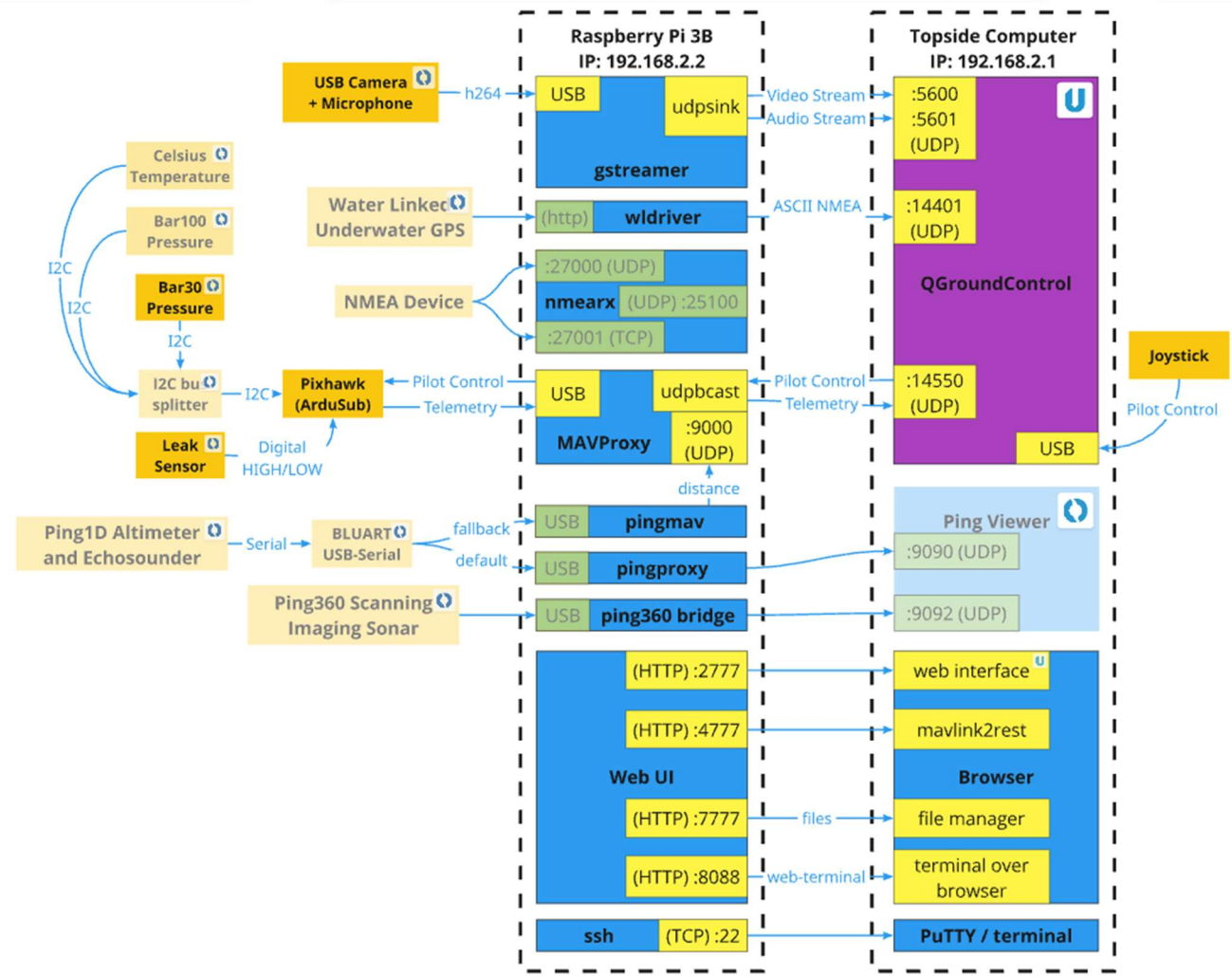

A3. Pymavlink

ArduSub communicates with a protocol called MAVLink. Pymavlink is a python implementation of the MAVLink protocol. With pymavlink, it is possible to create a python script to read sensor data and send commands to an ArduSub vehicle.

A4. OpenCV

OpenCV (Open Source Computer Vision) is a library to help the development of computer vision software. To perform any real-time image processing with the companion camera, we highly suggest OpenCV to do the job.

Methodology for Software

The main Flow chart of our mission is the basic outline of our whole project. Here, Vehicle Controller is our Pixhawk module which controls the thruster System and the mission computer which controls the Manipulator and receives signals from the sensors and sends signals to Manipulator and controller.

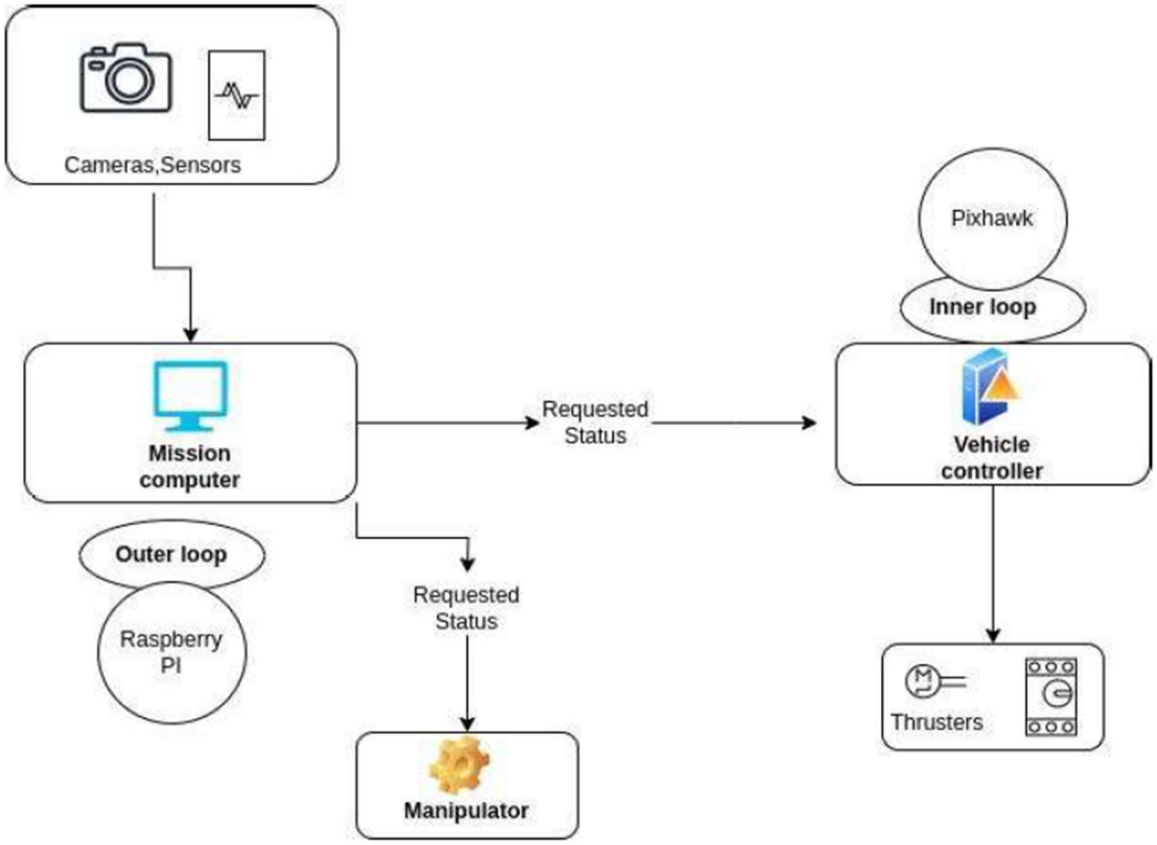

Now Diving deep into the Inner Loop, this is a Feed Back loop because PID control which stabilizes the system more. But there is a part which we want to focus on, there will be the noise with the data we are receiving from the Accelerometers and Gyroscopes.

Methodology of Automation

Every Autonomous robot has a process,

sensors → perception→ decision → control.

Here is the flowchart of Autonomy of our robot in which,

Green nodes => Perception

Orange nodes => Decision

Light Green nodes => Control

Red nodes => Fail Safe

For each node, red boxes are the Topics that node Publishing and Blue boxes are the Topics that node subscribed for.

Here, we have two options, we can either Publisher and Subscriber relation or Server and Client relation. We opted for the Publisher and Subscriber Node because we need a continuous supply of data between the sensor and the complementary computer and controller. These continuous supply of data is called Topics. Even though, we have goal.

Now as we can see from the flow chart that our robot will get Perception like gate position, bucket position etc. from Left-hand Side nodes with the help of cameras, Sensors like Depth sensor, Leak sensor, IMU and Hydrophones, then take Decision using the mission_manager_node and Control the Actuator, Manipulator using the AUV_controller_Node, Manipulator_Controller_node also with the failsafe mechanism using the Fail-safe which can Abort the mission and ensures the Robot Safety.

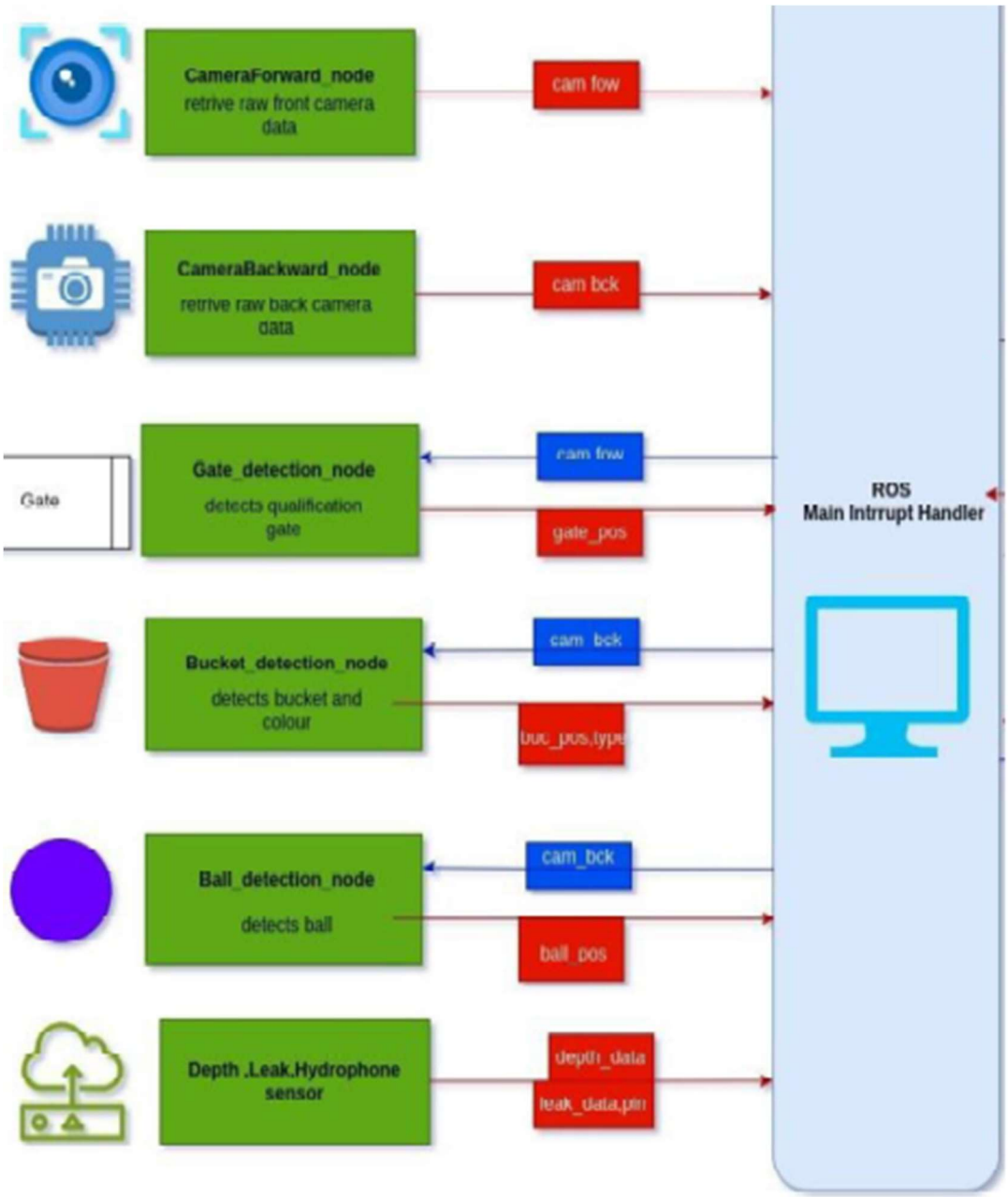
CameraForward_node
retrive raw front camera data
cam fow
CameraBackward_node
retrive raw back camera data
cam bck
Gate
Gate_detection_node
detects qualification gate
cam fow
gate_pos
Bucket_detection_node
detects bucket and colour
cam_bck
Ball_detection_node
detects ball
cam_bck
ball_pos
Depth ,Leak,Hydrophone sensor
depth_data
ROS
Main Intrrupt Handler

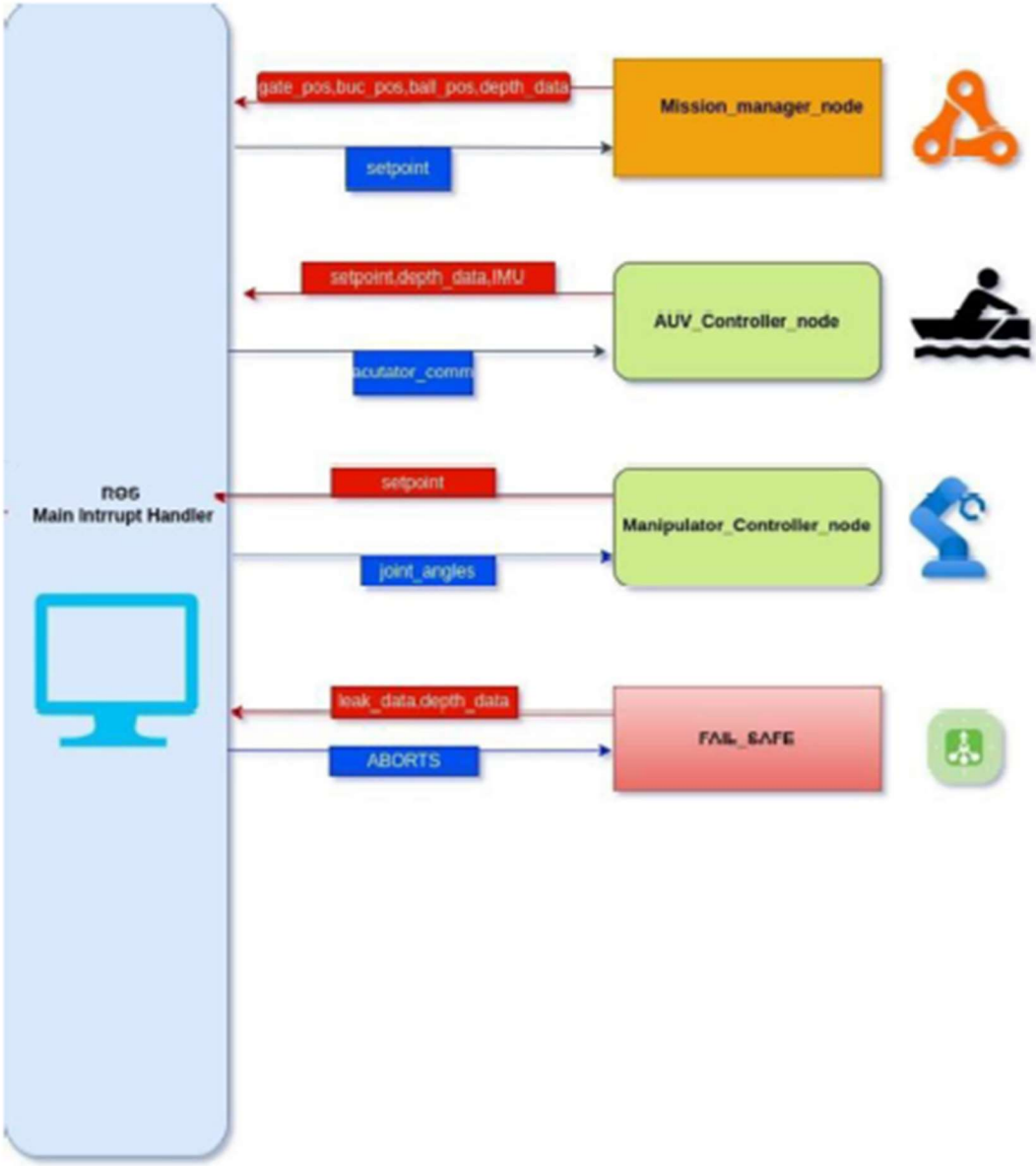

Thruster Model C analysis

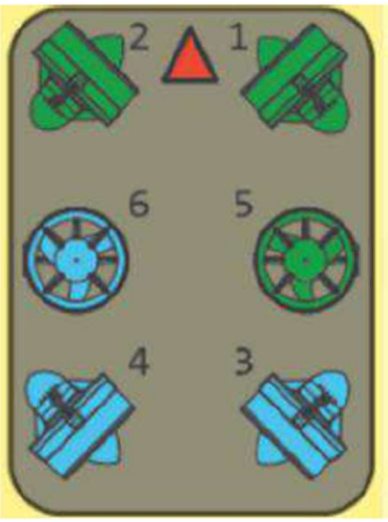

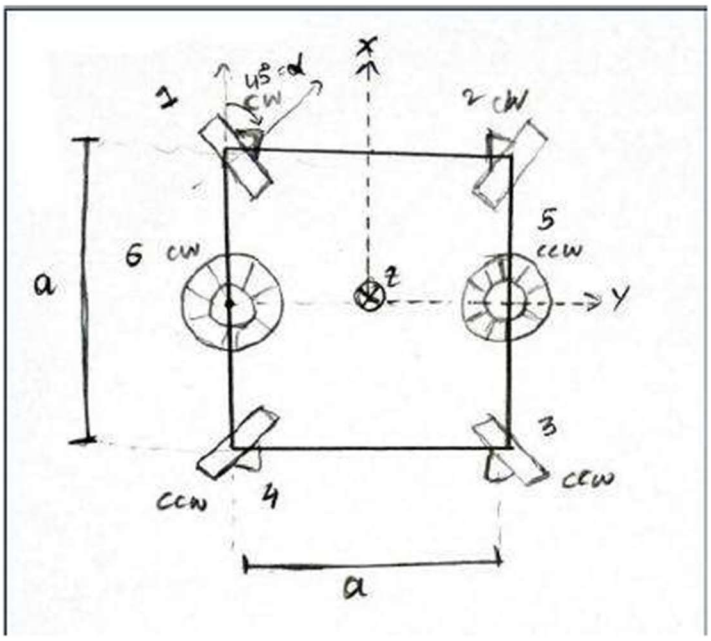

Position and orientation unit vectors for model C is derived as,

$\frac{i}{\text{Cr}}$	1	2	3	4	5	6
r_x	$a/2$	$a/2$	$-a/2$	$-a/2$	0	0
r_y	$-a/2$	$a/2$	$a/2$	$-a/2$	$a/2$	$-a/2$
r_z	0	0	0	0	0	0
e_x	$\cos\pi/4$	$\cos -\pi/4$	$\cos(-3\pi/4)$	$\cos(3\pi/4)$	0	0
e_y	$\sin\pi/4$	$\sin(-\pi/4)$	$\sin(-3\pi/4)$	$\sin(3\pi/4)$	0	0
e_z	0	0	0	0	1	1

For an example of
frame length (a) = 10 m
f_max = 1 kgf
Calculating in the MATLAB we get,

```
r =

     5     5    -5    -5     0     0
    -5     5     5    -5     5    -5
     0     0     0     0     0     0
```

```
e =

    0.7071    0.7071   -0.7071   -0.7071         0         0
    0.7071   -0.7071   -0.7071    0.7071         0         0
         0         0         0         0    1.0000    1.0000
```

```
T_matrix =

    0.7071    0.7071   -0.7071   -0.7071         0         0
    0.7071   -0.7071   -0.7071    0.7071         0         0
         0         0         0         0    1.0000    1.0000
         0         0         0         0    5.0000   -5.0000
         0         0         0         0         0         0
    7.0711   -7.0711    7.0711   -7.0711         0         0
```

```
s =

     1
     1
    -1
    -1
     1
    -1
```

Tou values for each control unit given by

```
uSurge=[1 1 -1 -1 0 0]';
uSway=[1 -1 -1 1 0 0]';
uHeave=[0 0 0 0 1 1]';
uYaw=[1 -1 1 -1 0 0]';
```

Tou ; u	uSurge	uSway	uHeave	uYaw
X	2.8284	0	0	0
Y	0	2.8284	0	-0.0000
Z	0	0	2	0
K	0	0	0	0
M	0	0	0	0
N	0	0	0	28.2843

T inverse matrix(to derive control unit) could be used to calculate control vector
As we prioritize surge, sway, heave and yaw inverse matrix is derived for these DOF

Tou & u(i)	X	Y	Z	N
1	0.3536	0.3536	0	0.0354
2	0.3536	-0.3536	0	-0.0354
3	-0.3536	-0.3536	0	0.0354
4	-0.3536	0.3536	0	-0.0354
5	0	0	0.5000	-0.0000
6	0	0	0.5000	-0.0000

MatLab Programme,

bacup_main_00.m × model_c.m × testing.m × tou_calc.m ×

/mnt/win_local_disk/Users/ganes/Documents/MATLAB/robotics/tou_calc.m

```
function [T_mat,T_mat_rec,Tou_rec,Tou] = tou_calc(r,e,u,fmax,sCoef,QeMax)
% r - thuster pos
% e - thruster orientation
% u - cotrol vector
% fmax - maximum thrust force
% sCoef - spin coefficient vector
% QeMax - maximum recoil torque

dim_r=size(r);
dim=dim_r(1); % num of axes
p=dim_r(2); % num of thrusters

T_mat=zeros(dim*2,p);
Tou_rec=zeros(dim*2,p);

T_mat(1:dim,1:p)=e;
Tou_rec(dim+1:end,1:p)=e;

for i=1:p
    T_mat(dim+1:end,i)=cross(r(:,i),e(:,i));
end

T_mat_rec = T_mat+Tou_rec.*sCoef';
Tou_rec = Tou_rec*(sCoef.*u)*QeMax;
Tou_rec(Tou_rec < 1.0e-10) = 0; % eliminating extremes

% disp("thruster position - r")
% disp(r)
% disp("thruster orientation - e")
% disp(e)
%
% disp(["no of thurster =", num2str(p)])
% disp(["no of axes =", num2str(dim)])
% disp("T_mat thruster control matrix (without recoil)")
% disp(T_mat)
% disp("T_mat thruster control matrix (with recoil)")
% disp(T_mat_rec)
% disp("Tou_rec recoil")
% disp(Tou_rec)

Tou=T_mat*u*fmax + Tou_rec;

% disp("tou total")
% disp(Tou)
end
```

Propeller Design

OpenProp:

OpenProp is the ideal tool for AUV propeller design because it allows you to move beyond inefficient, off-the-shelf parts to create highly optimized, custom propulsion. By using validated naval theory, it enables you to maximize battery endurance through precise efficiency tuning, account for the unique water flow (wake) created by your AUV's hull, and perfectly match the propeller to your motor's specific RPM. Ultimately, it provides a fast, cost-free way to go from mathematical optimization to a 3D-printable model, ensuring your vehicle achieves the longest possible mission range.

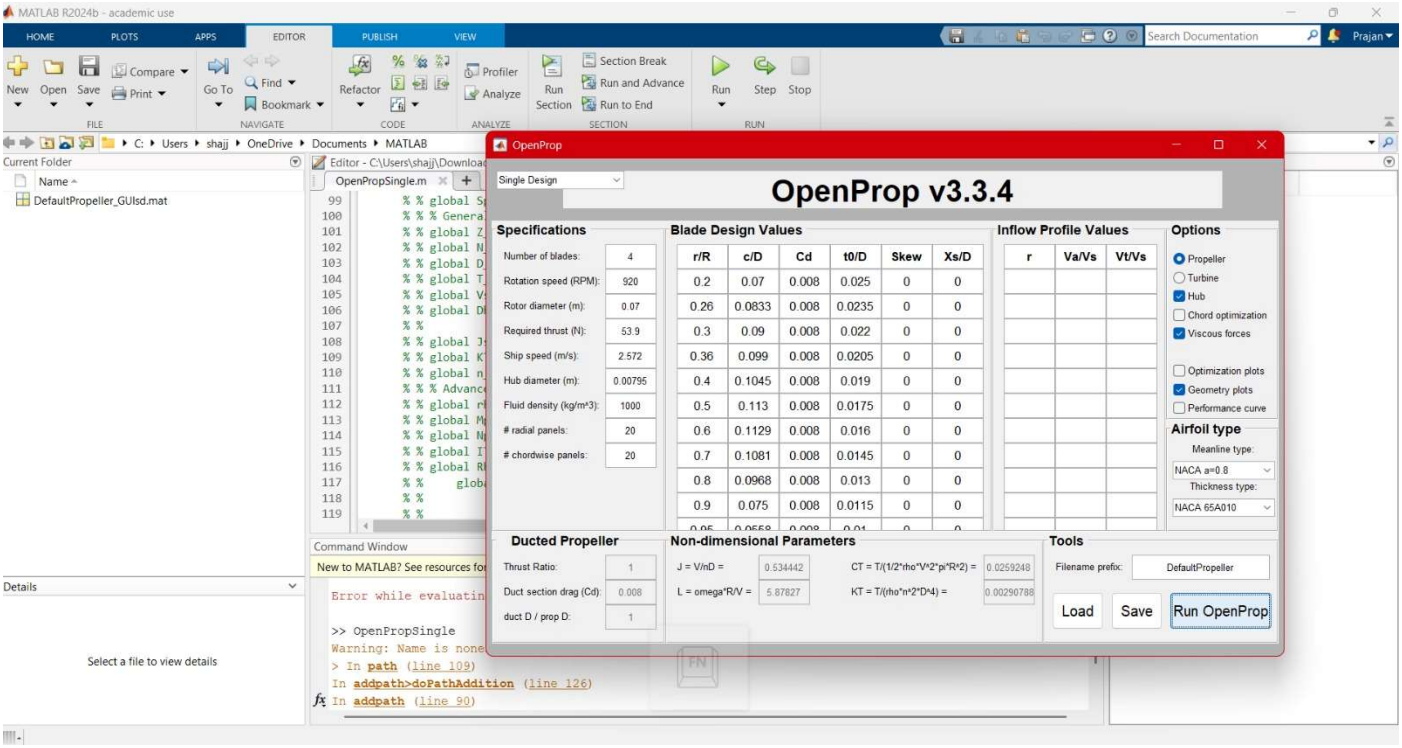
MATLAB R2024b - academic use
OpenProp
Single Design
OpenProp v3.3.4
Specifications
Number of blades: 4
Rotation speed (RPM): 920
Rotor diameter (m): 0.07
Required thrust (N): 53.9
Ship speed (m/s): 2.572
Hub diameter (m): 0.00795
Fluid density (kg/m^3): 1000
radial panels: 20
chordwise panels: 20
Blade Design Values
r/R c/D Cd t0/D Skew Xs/D
0.2 0.07 0.008 0.025 0 0
0.26 0.0833 0.008 0.0235 0 0
0.3 0.09 0.008 0.022 0 0
0.36 0.099 0.008 0.0205 0 0
0.4 0.1045 0.008 0.019 0 0
0.5 0.113 0.008 0.0175 0 0
0.6 0.1129 0.008 0.016 0 0
0.7 0.1081 0.008 0.0145 0 0
0.8 0.0968 0.008 0.013 0 0
0.9 0.075 0.008 0.0115 0 0
Inflow Profile Values
r Va/Vs Vt/Vs
Options
Propeller
Turbine
Hub
Chord optimization
Viscous forces
Optimization plots
Geometry plots
Performance curve
Airfoil type
Meanline type:
NACA a=0.8
Thickness type:
NACA 65A010
Ducted Propeller
Thrust Ratio: 1
Duct section drag (Cd): 0.008
duct D / prop D: 1
Non-dimensional Parameters
J = V/nD = 0.534442
L = omega*R/V = 5.87827
CT = T/(1/2*rho*V^2*pi*R^2) = 0.0259248
KT = T/(rho*n^2*D^4) = 0.00290788
Tools
Filename prefix: DefaultPropeller
Load
Save
Run OpenProp
Current Folder
DefaultPropeller_GUIsd.mat
Editor - C:\Users\shajj\Download
OpenPropSingle.m
Command Window
Error while evaluatin
>> OpenPropSingle
Warning: Name is none
> In path (line 109)
In addpath>doPathAddition (line 126)
In addpath (line 90)
Select a file to view details

APPEDIX

1. Exact model and make of components

3d print of propeller

3d Print Of motor Holder

Electronic Enclosure:

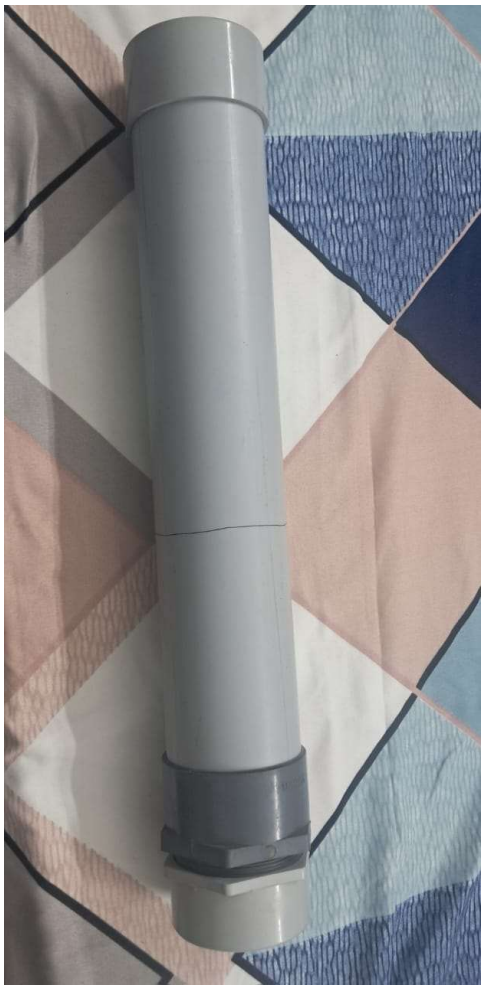

Frame of the Robot:

2. Detailed Component level CAD drawings

Front:

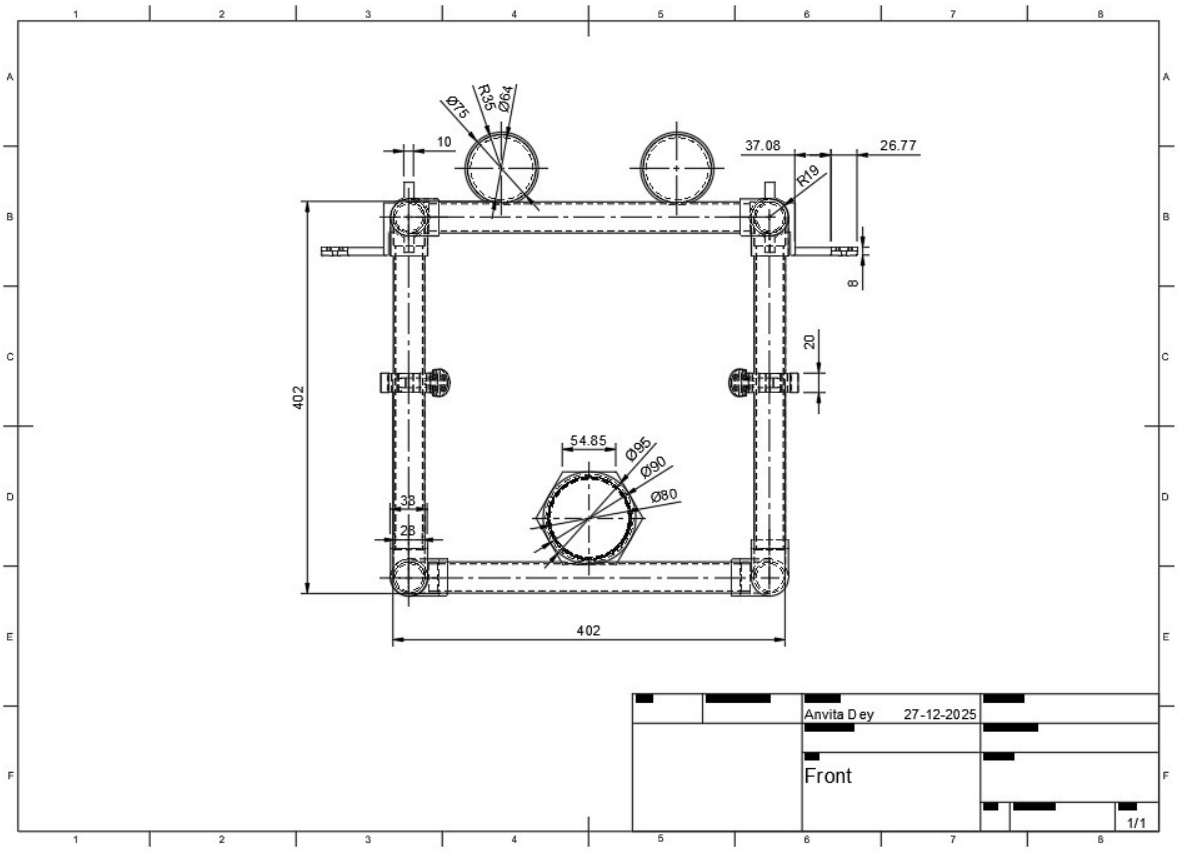

Top:

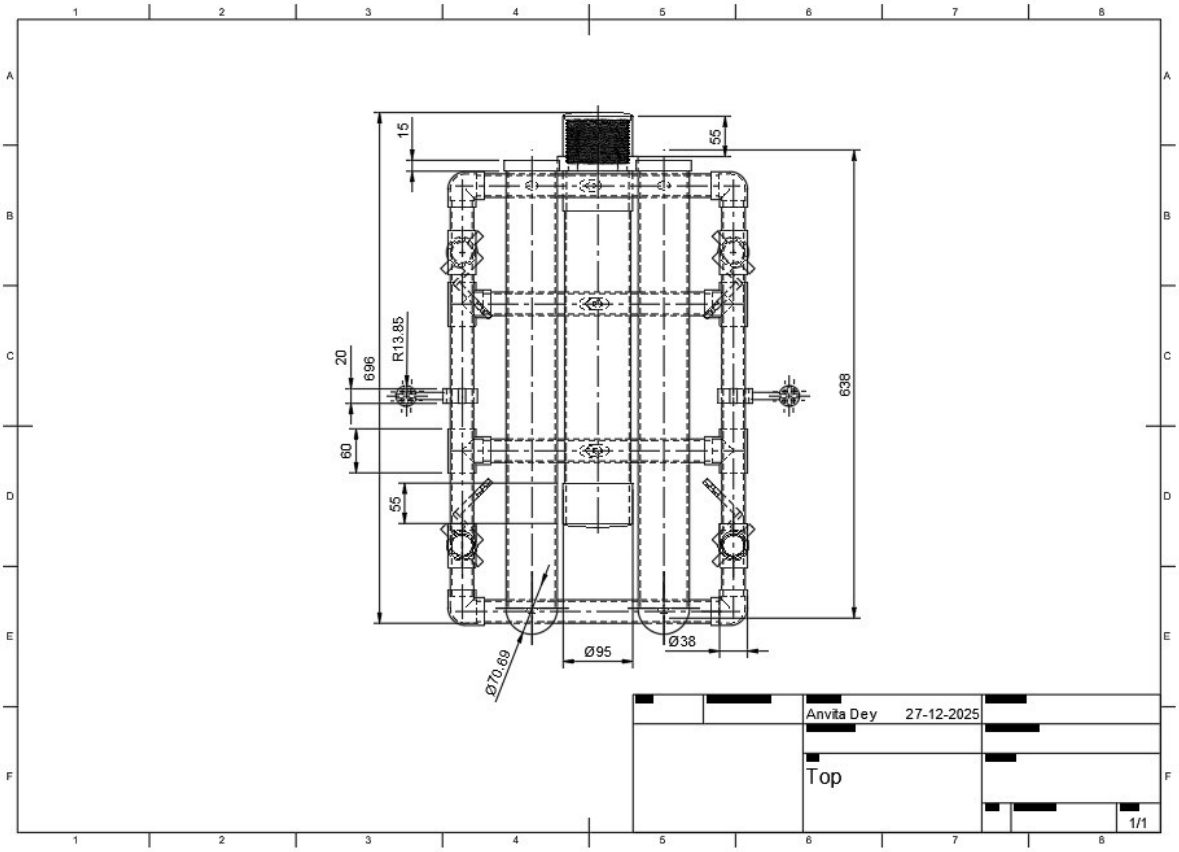

Bottom:

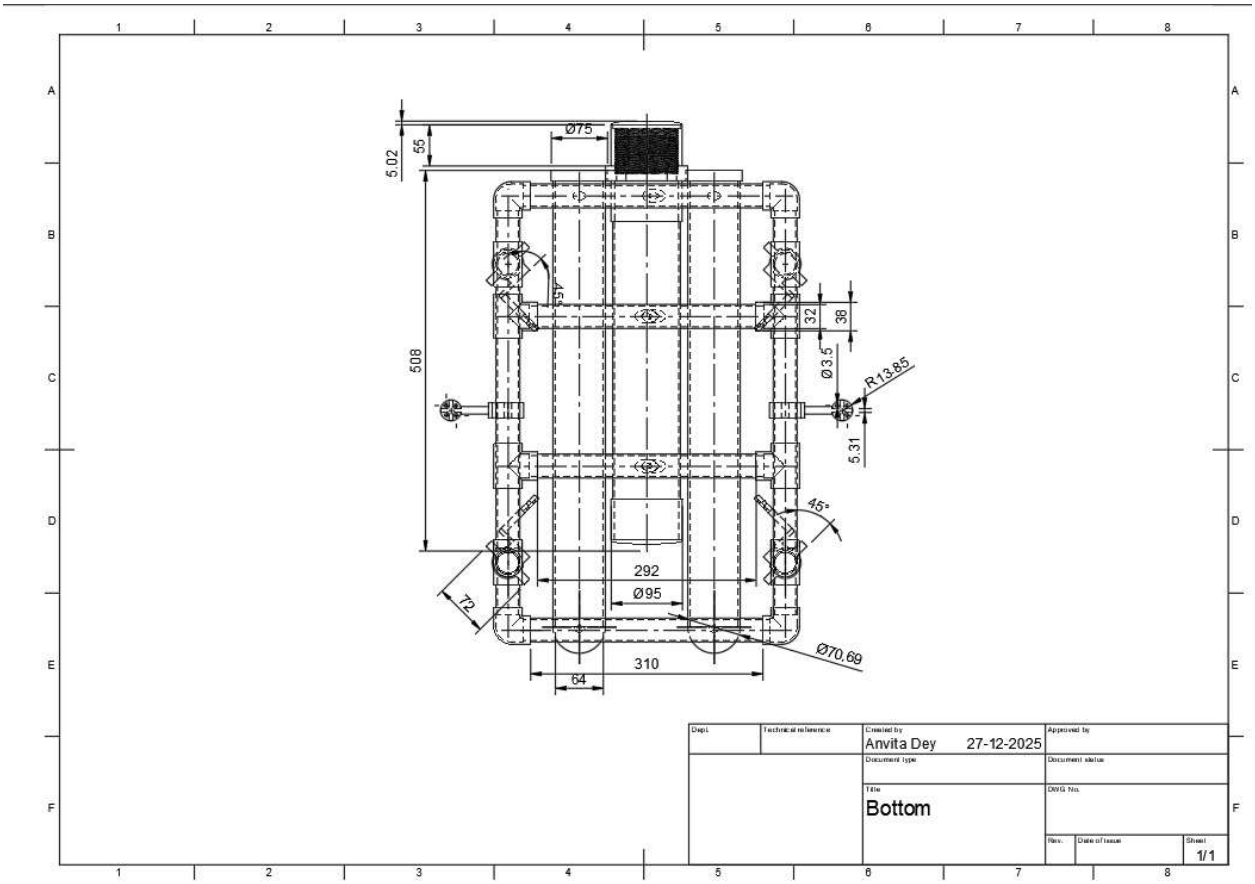

Right:

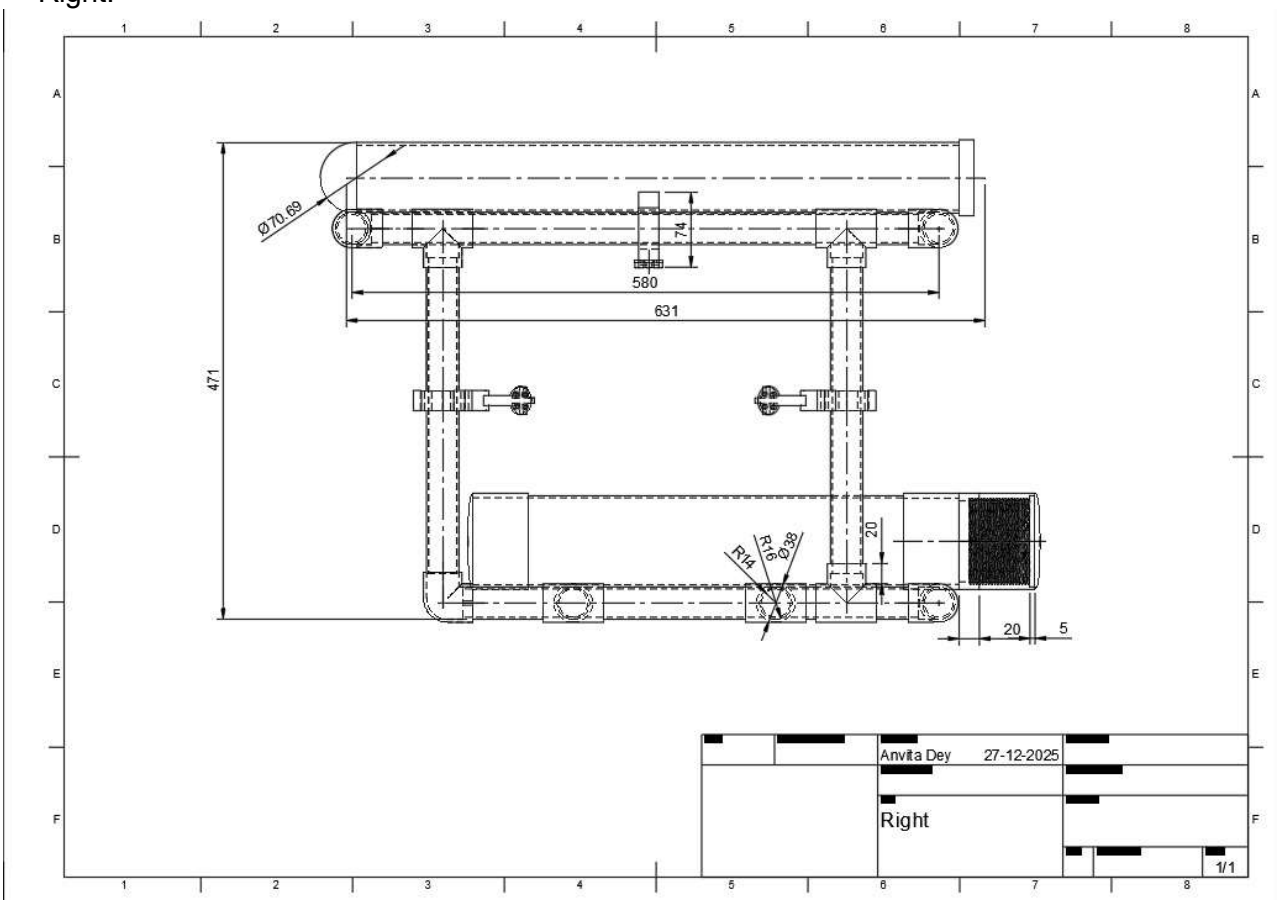

Left:

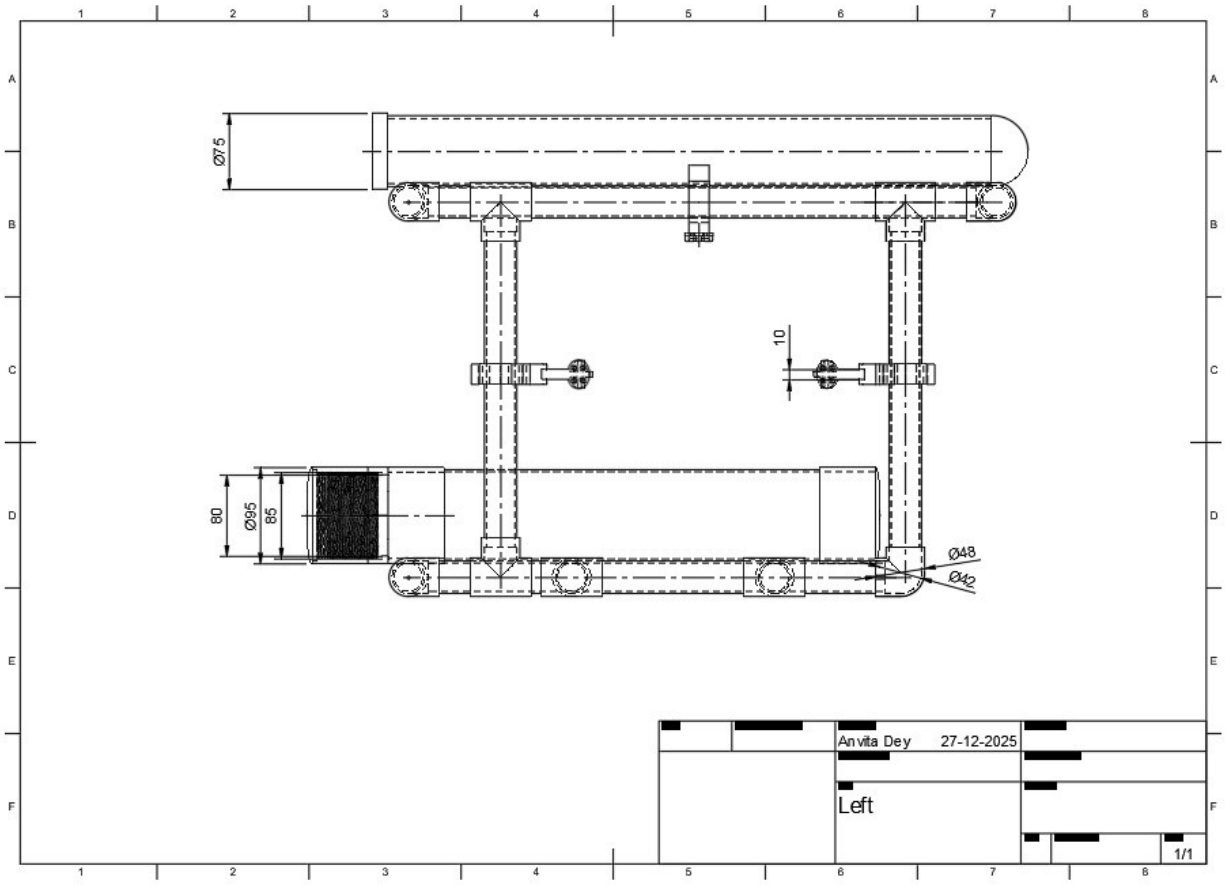
Ø75
10
80
Ø95
85
Ø48
Ø42
Anvita Dey 27-12-2025
Left
1/1

Back:

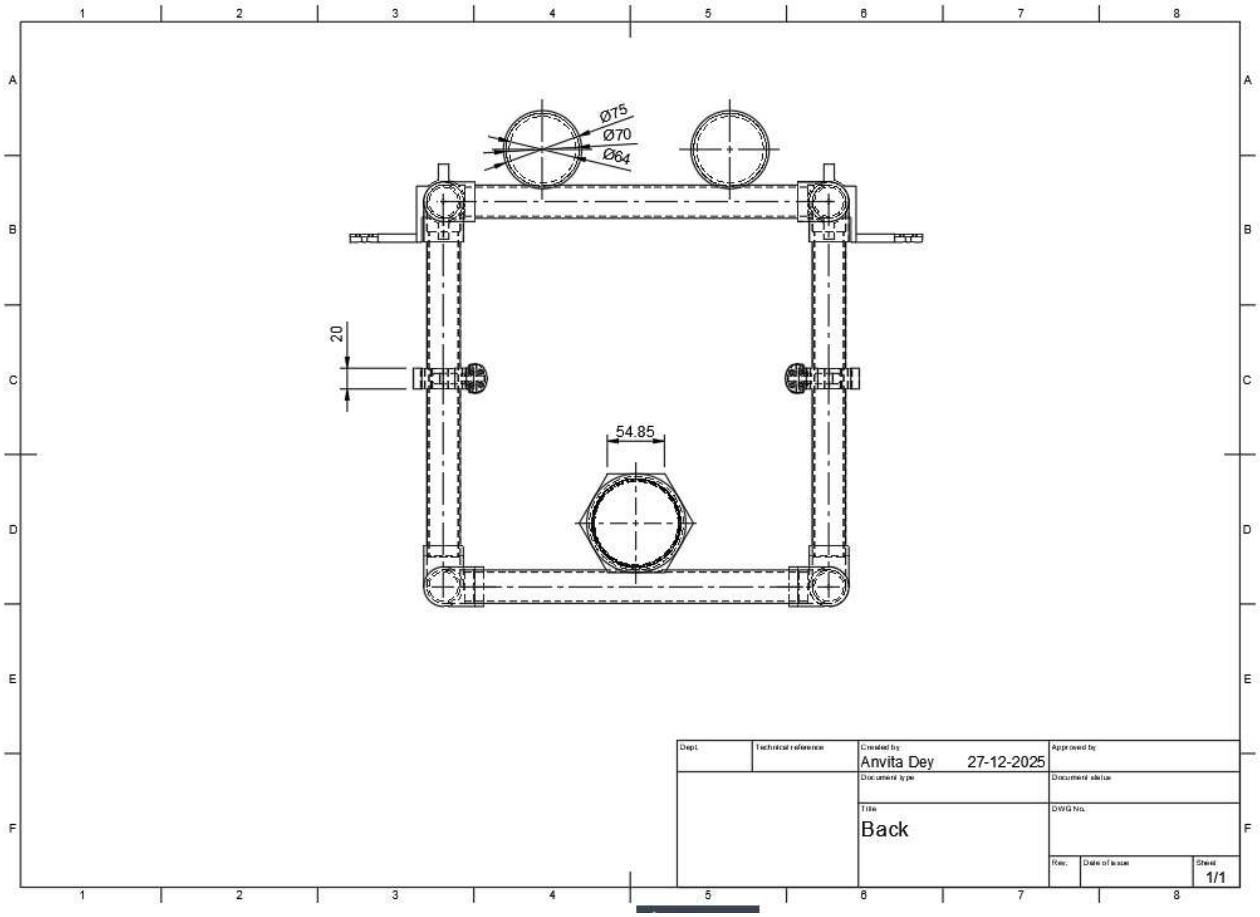
Ø75
Ø70
Ø64
20
54.85
Anvita Dey 27-12-2025
Back
1/1

Name, Photo and Signature of Team Members:

Padullaparthy Ravi Ganesh

Dheena Dhayalan BalaMurugan

Arjun Narendra

Anvitha Dey

Name, Photo and Signature of Mentor:

Dr. Pramod Sreedharan

Signature & Seal of Head of Institution:

Dr. Balakrishnan Shankar
Dean, Amrita School of Engineering
Amrita Vishwa Vidyapeetham
Amritapuri Campus
Kollam - 690 525