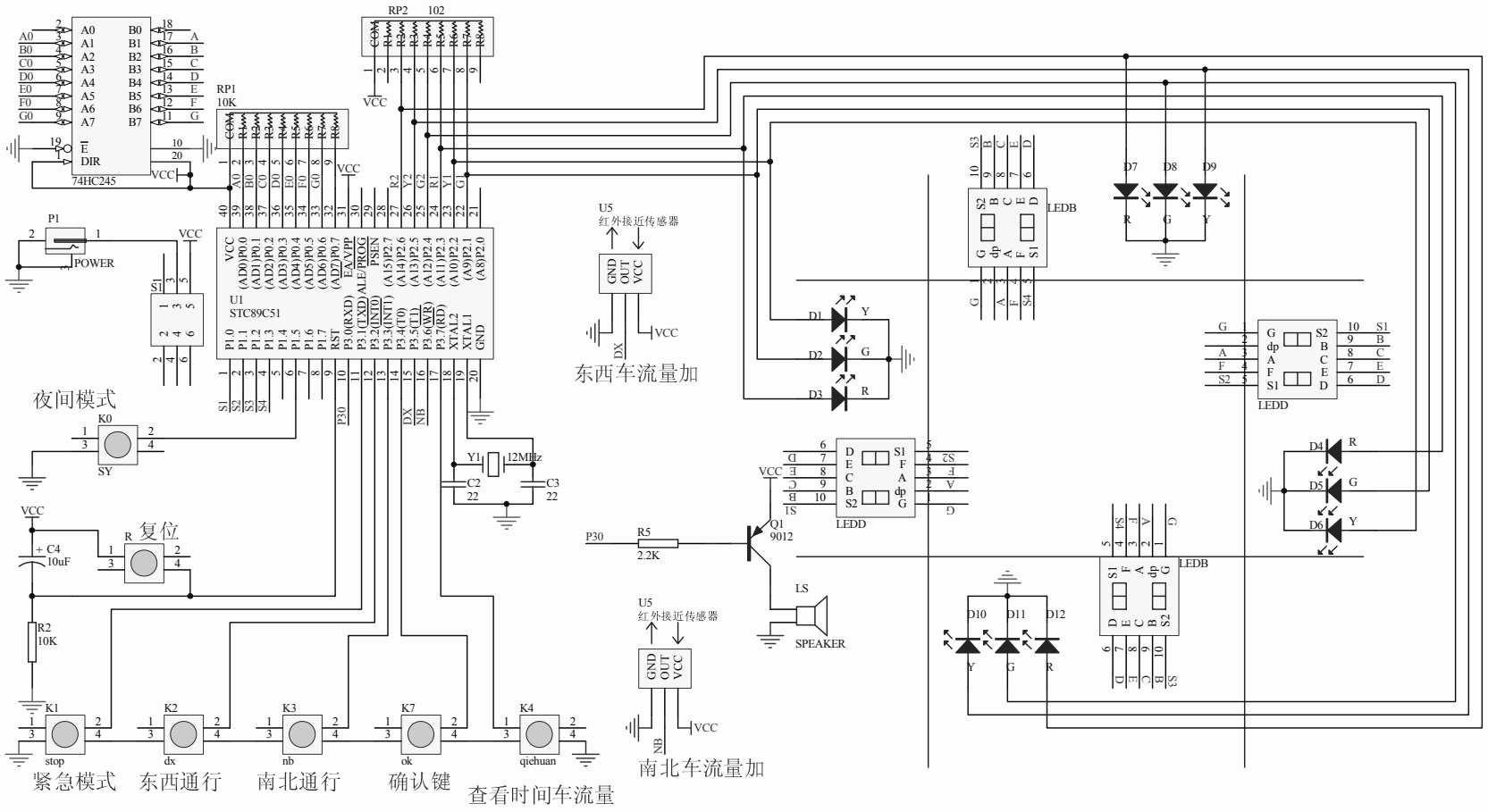

Title		
Size B	Number	Revision
Date: 2017-1-13		Sheet of
File: C:\DOCUMENTS AND SETTINGS\..\BACKUP\SHEET2.SCH		Drawn by: