PIC16C84

8-bit CMOS EEPROM Microcontroller

High Performance RISC CPU Features:

- Only 35 single word instructions to learn
- All instructions single cycle (400 ns @ 10 MHz) except for program branches which are two-cycle
- Operating speed: DC - 10 MHz clock input
  DC - 400 ns instruction cycle
- 14-bit wide instructions
- 8-bit wide data path
- 1K x 14 EEPROM program memory
- 36 x 8 general purpose registers (SRAM)
- 64 x 8 on-chip EEPROM data memory
- 15 special function hardware registers
- Eight-level deep hardware stack
- Direct, indirect and relative addressing modes
- Four interrupt sources:
  - External RB0/INT pin
  - TMR0 timer overflow
  - PORTB<7:4> interrupt on change
  - Data EEPROM write complete
- 1,000,000 data memory EEPROM ERASE/WRITE cycles
- EEPROM Data Retention > 40 years

Peripheral Features:

- 13 I/O pins with individual direction control
- High current sink/source for direct LED drive
  - 25 mA sink max. per pin
  - 20 mA source max. per pin
- TMR0: 8-bit timer/counter with 8-bit programmable prescaler

Special Microcontroller Features:

- Power-on Reset (POR)
- Power-up Timer (PWRT)
- Oscillator Start-up Timer (OST)
- Watchdog Timer (WDT) with its own on-chip RC oscillator for reliable operation
- Code protection
- Power saving SLEEP mode
- Selectable oscillator options
- Serial In-System Programming - via two pins

Pin Diagram

PDIP, SOIC

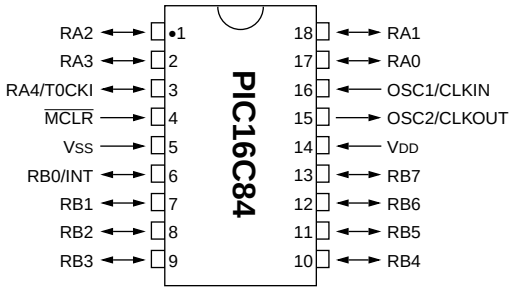

CMOS Technology:

- Low-power, high-speed CMOS EEPROM technology
- Fully static design
- Wide operating voltage range:
  - Commercial: 2.0V to 6.0V
  - Industrial: 2.0V to 6.0V
- Low power consumption:
  - < 2 mA typical @ 5V, 4 MHz
  - 60 µA typical @ 2V, 32 kHz
  - 26 µA typical standby current @ 2V

Table of Contents

To Our Valued Customers

We constantly strive to improve the quality of all our products and documentation. We have spent a great deal of time to ensure that these documents are correct. However, we realize that we may have missed a few things. If you find any information that is missing or appears in error, please use the reader response form in the back of this data sheet to inform us. We appreciate your assistance in making this a better document.

FIGURE 3-1: PIC16C84 BLOCK DIAGRAM

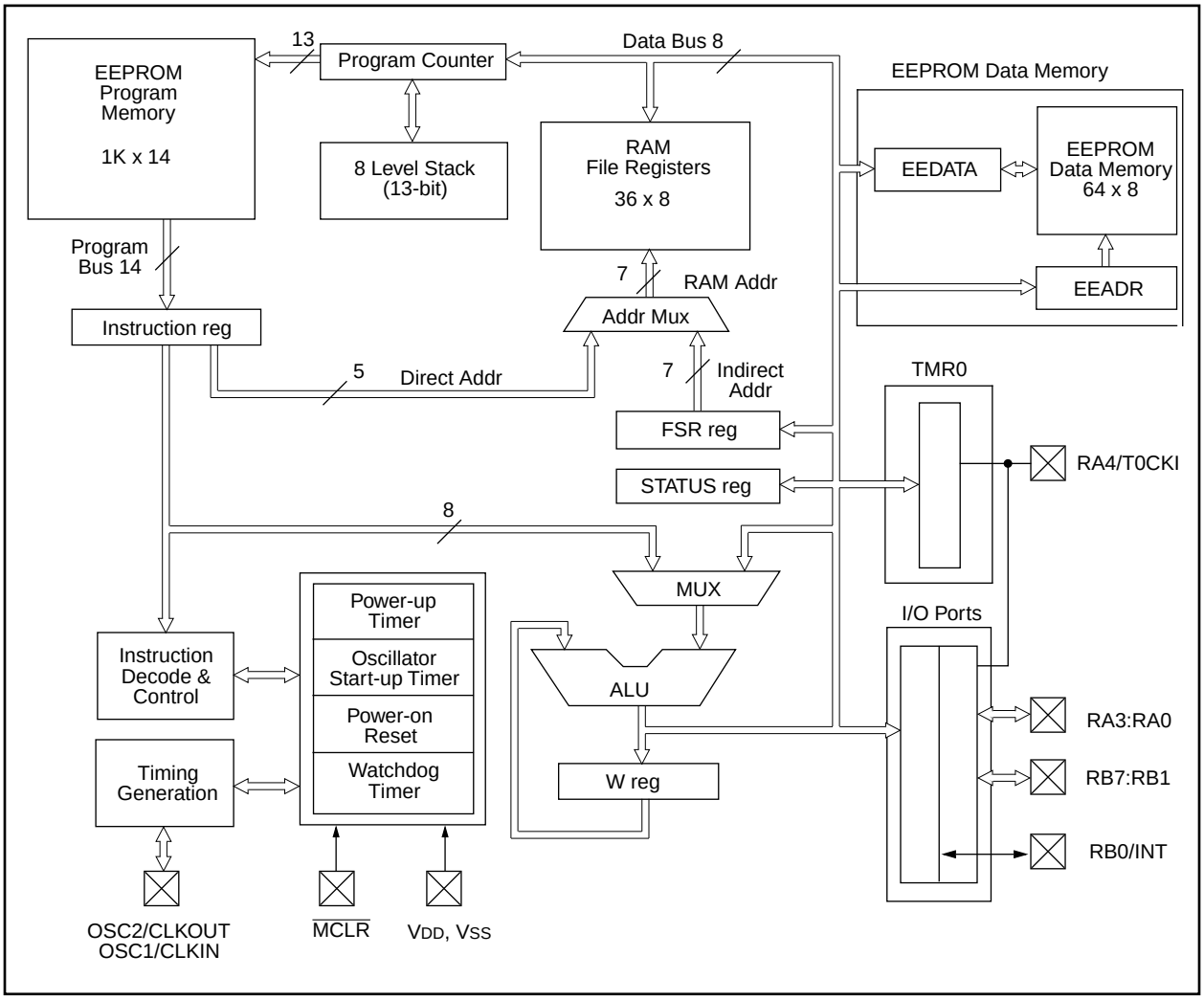

TABLE 4-1 REGISTER FILE SUMMARY

Address	Name	Bit 7	Bit 6	Bit 5	Bit 4	Bit 3	Bit 2	Bit 1	Bit 0	Value on Power-on Reset	Value on all other resets (Note3)
Bank 0											
00h	INDF	Uses contents of FSR to address data memory (not a physical register)								---- ----	---- ----
01h	TMR0	8-bit real-time clock/counter								xxxx xxxx	uuuu uuuu
02h	PCL	Low order 8 bits of the Program Counter (PC)								0000 0000	0000 0000
03h	STATUS (2)	IRP	RP1	RP0	$\overline{TO}$	$\overline{PD}$	Z	DC	C	0001 1xxx	000q quuu
04h	FSR	Indirect data memory address pointer 0								xxxx xxxx	uuuu uuuu
05h	PORTA	—	—	—	RA4/T0CKI	RA3	RA2	RA1	RA0	---x xxxx	---u uuuu
06h	PORTB	RB7	RB6	RB5	RB4	RB3	RB2	RB1	RB0/INT	xxxx xxxx	uuuu uuuu
07h		Unimplemented location, read as '0'								---- ----	---- ----
08h	EEDATA	EEPROM data register								xxxx xxxx	uuuu uuuu
09h	EEADR	EEPROM address register								xxxx xxxx	uuuu uuuu
0Ah	PCLATH	—	—	—	Write buffer for upper 5 bits of the PC (1)					---0 0000	---0 0000
0Bh	INTCON	GIE	EEIE	T0IE	INTE	RBIE	T0IF	INTF	RBIF	0000 000x	0000 000u
Bank 1											
80h	INDF	Uses contents of FSR to address data memory (not a physical register)								---- ----	---- ----
81h	OPTION_REG	$\overline{RBPU}$	INTEDG	T0CS	T0SE	PSA	PS2	PS1	PS0	1111 1111	1111 1111
82h	PCL	Low order 8 bits of Program Counter (PC)								0000 0000	0000 0000
83h	STATUS (2)	IRP	RP1	RP0	$\overline{TO}$	$\overline{PD}$	Z	DC	C	0001 1xxx	000q quuu
84h	FSR	Indirect data memory address pointer 0								xxxx xxxx	uuuu uuuu
85h	TRISA	—	—	—	PORTA data direction register					---1 1111	---1 1111
86h	TRISB	PORTB data direction register								1111 1111	1111 1111
87h		Unimplemented location, read as '0'								---- ----	---- ----
88h	EECON1	—	—	—	EEIF	WRERR	WREN	WR	RD	---0 x000	---0 q000
89h	EECON2	EEPROM control register 2 (not a physical register)								---- ----	---- ----
0Ah	PCLATH	—	—	—	Write buffer for upper 5 bits of the PC (1)					---0 0000	---0 0000
0Bh	INTCON	GIE	EEIE	T0IE	INTE	RBIE	T0IF	INTF	RBIF	0000 000x	0000 000u

Legend: x = unknown, u = unchanged. - = unimplemented read as '0', q = value depends on condition.

Note 1: The upper byte of the program counter is not directly accessible. PCLATH is a slave register for PC<12:8>. The contents of PCLATH can be transferred to the upper byte of the program counter, but the contents of PC<12:8> is never transferred to PCLATH.

2: The $\overline{TO}$ and $\overline{PD}$ status bits in the STATUS register are not affected by a $\overline{MCLR}$ reset.

3: Other (non power-up) resets include: external reset through $\overline{MCLR}$ and the Watchdog Timer Reset.

9.0 INSTRUCTION SET SUMMARY

Each PIC16CXX instruction is a 14-bit word divided into an OPCODE which specifies the instruction type and one or more operands which further specify the operation of the instruction. The PIC16CXX instruction set summary in Table 9-2 lists **byte-oriented**, **bit-oriented**, and **literal and control** operations. Table 9-1 shows the opcode field descriptions.

For **byte-oriented** instructions, 'f' represents a file register designator and 'd' represents a destination designator. The file register designator specifies which file register is to be used by the instruction.

The destination designator specifies where the result of the operation is to be placed. If 'd' is zero, the result is placed in the W register. If 'd' is one, the result is placed in the file register specified in the instruction.

For **bit-oriented** instructions, 'b' represents a bit field designator which selects the number of the bit affected by the operation, while 'f' represents the number of the file in which the bit is located.

For **literal and control** operations, 'k' represents an eight or eleven bit constant or literal value.

TABLE 9-1 OPCODE FIELD DESCRIPTIONS

Field	Description
f	Register file address (0x00 to 0x7F)
W	Working register (accumulator)
b	Bit address within an 8-bit file register
k	Literal field, constant data or label
x	Don't care location (= 0 or 1) The assembler will generate code with x = 0. It is the recommended form of use for compatibility with all Microchip software tools.
d	Destination select; d = 0: store result in W, d = 1: store result in file register f. Default is d = 1
label	Label name
TOS	Top of Stack
PC	Program Counter
PCLATH	Program Counter High Latch
GIE	Global Interrupt Enable bit
WDT	Watchdog Timer/Counter
$\overline{TO}$	Time-out bit
$\overline{PD}$	Power-down bit
dest	Destination either the W register or the specified register file location
[ ]	Options
( )	Contents
→	Assigned to
< >	Register bit field
∈	In the set of
italics	User defined term (font is courier)

The instruction set is highly orthogonal and is grouped into three basic categories:

- **Byte-oriented** operations
- **Bit-oriented** operations
- **Literal and control** operations

All instructions are executed within one single instruction cycle, unless a conditional test is true or the program counter is changed as a result of an instruction. In this case, the execution takes two instruction cycles with the second cycle executed as a NOP. One instruction cycle consists of four oscillator periods. Thus, for an oscillator frequency of 4 MHz, the normal instruction execution time is 1 µs. If a conditional test is true or the program counter is changed as a result of an instruction, the instruction execution time is 2 µs.

Table 9-2 lists the instructions recognized by the MPASM assembler.

Figure 9-1 shows the general formats that the instructions can have.

> **Note:** To maintain upward compatibility with future PIC16CXX products, do not use the OPTION and TRIS instructions.

All examples use the following format to represent a hexadecimal number:

0xhh

where h signifies a hexadecimal digit.

FIGURE 9-1: GENERAL FORMAT FOR INSTRUCTIONS

Byte-oriented file register operations

13 … 8	7	6 … 0
OPCODE	d	f (FILE #)

d = 0 for destination W
d = 1 for destination f
f = 7-bit file register address

Bit-oriented file register operations

13 … 10	9 … 7	6 … 0
OPCODE	b (BIT #)	f (FILE #)

b = 3-bit bit address
f = 7-bit file register address

Literal and control operations

General

13 … 8	7 … 0
OPCODE	k (literal)

k = 8-bit immediate value

CALL and GOTO instructions only

13 … 11	10 … 0
OPCODE	k (literal)

k = 11-bit immediate value

TABLE 9-2 PIC16CXX INSTRUCTION SET

Mnemonic, Operands		Description	Cycles	14-Bit Opcode MSb			LSb	Status Affected	Notes
BYTE-ORIENTED FILE REGISTER OPERATIONS									
ADDWF	**f, d**	Add W and f	1	00	0111	dfff	ffff	C,DC,Z	1,2
ANDWF	**f, d**	AND W with f	1	00	0101	dfff	ffff	Z	1,2
CLRF	**f**	Clear f	1	00	0001	lfff	ffff	Z	2
CLRW	**-**	Clear W	1	00	0001	0xxx	xxxx	Z	
COMF	**f, d**	Complement f	1	00	1001	dfff	ffff	Z	1,2
DECF	**f, d**	Decrement f	1	00	0011	dfff	ffff	Z	1,2
DECFSZ	**f, d**	Decrement f, Skip if 0	1(2)	00	1011	dfff	ffff		1,2,3
INCF	**f, d**	Increment f	1	00	1010	dfff	ffff	Z	1,2
INCFSZ	**f, d**	Increment f, Skip if 0	1(2)	00	1111	dfff	ffff		1,2,3
IORWF	**f, d**	Inclusive OR W with f	1	00	0100	dfff	ffff	Z	1,2
MOVF	**f, d**	Move f	1	00	1000	dfff	ffff	Z	1,2
MOVWF	**f**	Move W to f	1	00	0000	lfff	ffff		
NOP	**-**	No Operation	1	00	0000	0xx0	0000		
RLF	**f, d**	Rotate Left f through Carry	1	00	1101	dfff	ffff	C	1,2
RRF	**f, d**	Rotate Right f through Carry	1	00	1100	dfff	ffff	C	1,2
SUBWF	**f, d**	Subtract W from f	1	00	0010	dfff	ffff	C,DC,Z	1,2
SWAPF	**f, d**	Swap nibbles in f	1	00	1110	dfff	ffff		1,2
XORWF	**f, d**	Exclusive OR W with f	1	00	0110	dfff	ffff	Z	1,2
BIT-ORIENTED FILE REGISTER OPERATIONS									
BCF	**f, b**	Bit Clear f	1	01	00bb	bfff	ffff		1,2
BSF	**f, b**	Bit Set f	1	01	01bb	bfff	ffff		1,2
BTFSC	**f, b**	Bit Test f, Skip if Clear	1 (2)	01	10bb	bfff	ffff		3
BTFSS	**f, b**	Bit Test f, Skip if Set	1 (2)	01	11bb	bfff	ffff		3
LITERAL AND CONTROL OPERATIONS									
ADDLW	**k**	Add literal and W	1	11	111x	kkkk	kkkk	C,DC,Z	
ANDLW	**k**	AND literal with W	1	11	1001	kkkk	kkkk	Z	
CALL	**k**	Call subroutine	2	10	0kkk	kkkk	kkkk		
CLRWDT	**-**	Clear Watchdog Timer	1	00	0000	0110	0100	$\overline{TO}$,$\overline{PD}$	
GOTO	**k**	Go to address	2	10	1kkk	kkkk	kkkk		
IORLW	**k**	Inclusive OR literal with W	1	11	1000	kkkk	kkkk	Z	
MOVLW	**k**	Move literal to W	1	11	00xx	kkkk	kkkk		
RETFIE	**-**	Return from interrupt	2	00	0000	0000	1001		
RETLW	**k**	Return with literal in W	2	11	01xx	kkkk	kkkk		
RETURN	**-**	Return from Subroutine	2	00	0000	0000	1000		
SLEEP	**-**	Go into standby mode	1	00	0000	0110	0011	$\overline{TO}$,$\overline{PD}$	
SUBLW	**k**	Subtract W from literal	1	11	110x	kkkk	kkkk	C,DC,Z	
XORLW	**k**	Exclusive OR literal with W	1	11	1010	kkkk	kkkk	Z	

Note 1: When an I/O register is modified as a function of itself (e.g., `MOVF PORTB, 1`), the value used will be that value present on the pins themselves. For example, if the data latch is '1' for a pin configured as input and is driven low by an external device, the data will be written back with a '0'.

2: If this instruction is executed on the TMR0 register (and, where applicable, d = 1), the prescaler will be cleared if assigned to the Timer0 Module.

3: If Program Counter (PC) is modified or a conditional test is true, the instruction requires two cycles. The second cycle is executed as a NOP.

9.1 Instruction Descriptions

ADDLW — Add Literal and W

Syntax:	[*label*] ADDLW k
Operands:	$0 \le k \le 255$
Operation:	(W) + k → (W)
Status Affected:	C, DC, Z
Encoding:	11 | 111x | kkkk | kkkk
Description:	The contents of the W register are added to the eight bit literal 'k' and the result is placed in the W register.
Words:	1
Cycles:	1

Q Cycle Activity:

Q1	Q2	Q3	Q4
Decode	Read literal 'k'	Process data	Write to W

Example:

```
ADDLW   0x15
```

Before Instruction
W = 0x10
After Instruction
W = 0x25

ANDLW — AND Literal with W

Syntax:	[*label*] ANDLW k
Operands:	$0 \le k \le 255$
Operation:	(W) .AND. (k) → (W)
Status Affected:	Z
Encoding:	11 | 1001 | kkkk | kkkk
Description:	The contents of W register are AND'ed with the eight bit literal 'k'. The result is placed in the W register.
Words:	1
Cycles:	1

Q Cycle Activity:

Q1	Q2	Q3	Q4
Decode	Read literal "k"	Process data	Write to W

Example

```
ANDLW   0x5F
```

Before Instruction
W = 0xA3
After Instruction
W = 0x03

ADDWF — Add W and f

Syntax:	[*label*] ADDWF f,d
Operands:	$0 \le f \le 127$ $d \in [0,1]$
Operation:	(W) + (f) → (destination)
Status Affected:	C, DC, Z
Encoding:	00 | 0111 | dfff | ffff
Description:	Add the contents of the W register with register 'f'. If 'd' is 0 the result is stored in the W register. If 'd' is 1 the result is stored back in register 'f'.
Words:	1
Cycles:	1

Q Cycle Activity:

Q1	Q2	Q3	Q4
Decode	Read register 'f'	Process data	Write to destination

Example

```
ADDWF   FSR, 0
```

Before Instruction
W = 0x17
FSR = 0xC2
After Instruction
W = 0xD9
FSR = 0xC2

ANDWF — AND W with f

Syntax:	[*label*] ANDWF f,d
Operands:	$0 \le f \le 127$ $d \in [0,1]$
Operation:	(W) .AND. (f) → (destination)
Status Affected:	Z
Encoding:	00 | 0101 | dfff | ffff
Description:	AND the W register with register 'f'. If 'd' is 0 the result is stored in the W register. If 'd' is 1 the result is stored back in register 'f'.
Words:	1
Cycles:	1

Q Cycle Activity:

Q1	Q2	Q3	Q4
Decode	Read register 'f'	Process data	Write to destination

Example

```
ANDWF   FSR, 1
```

Before Instruction
W = 0x17
FSR = 0xC2
After Instruction
W = 0x17
FSR = 0x02

BCF — Bit Clear f

Syntax: [*label*] BCF f,b

Operands: $0 \le f \le 127$
$0 \le b \le 7$

Operation: $0 \rightarrow$ (f<b>)

Status Affected: None

Encoding:

01	00bb	bfff	ffff

Description: Bit 'b' in register 'f' is cleared.

Words: 1

Cycles: 1

Q Cycle Activity:

Q1	Q2	Q3	Q4
Decode	Read register 'f'	Process data	Write register 'f'

Example

```
BCF     FLAG_REG, 7
```

Before Instruction
FLAG_REG = 0xC7
After Instruction
FLAG_REG = 0x47

BSF — Bit Set f

Syntax: [*label*] BSF f,b

Operands: $0 \le f \le 127$
$0 \le b \le 7$

Operation: $1 \rightarrow$ (f<b>)

Status Affected: None

Encoding:

01	01bb	bfff	ffff

Description: Bit 'b' in register 'f' is set.

Words: 1

Cycles: 1

Q Cycle Activity:

Q1	Q2	Q3	Q4
Decode	Read register 'f'	Process data	Write register 'f'

Example

```
BSF     FLAG_REG,   7
```

Before Instruction
FLAG_REG = 0x0A
After Instruction
FLAG_REG = 0x8A

BTFSC — Bit Test, Skip if Clear

Syntax: [*label*] BTFSC f,b

Operands: $0 \le f \le 127$
$0 \le b \le 7$

Operation: skip if (f<b>) = 0

Status Affected: None

Encoding:

01	10bb	bfff	ffff

Description: If bit 'b' in register 'f' is '1' then the next instruction is executed.
If bit 'b', in register 'f', is '0' then the next instruction is discarded, and a NOP is executed instead, making this a 2TCY instruction.

Words: 1

Cycles: 1(2)

Q Cycle Activity:

Q1	Q2	Q3	Q4
Decode	Read register 'f'	Process data	No-Operation

If Skip: (2nd Cycle)

Q1	Q2	Q3	Q4
No-Operation	No-Operation	No-Operation	No-Operation

Example

```
HERE    BTFSC   FLAG,1
FALSE   GOTO    PROCESS_CODE
TRUE    •
        •
        •
```

Before Instruction
PC = address HERE
After Instruction
if FLAG<1> = 0,
PC = address TRUE
if FLAG<1>=1,
PC = address FALSE

BTFSS — Bit Test f, Skip if Set

Syntax: [*label*] BTFSS f,b

Operands: $0 \le f \le 127$
$0 \le b < 7$

Operation: skip if (f<b>) = 1

Status Affected: None

Encoding:

01	11bb	bfff	ffff

Description: If bit 'b' in register 'f' is '0' then the next instruction is executed.
If bit 'b' is '1', then the next instruction is discarded and a NOP is executed instead, making this a 2TCY instruction.

Words: 1

Cycles: 1(2)

Q Cycle Activity:

Q1	Q2	Q3	Q4
Decode	Read register 'f'	Process data	No-Operation

If Skip: (2nd Cycle)

Q1	Q2	Q3	Q4
No-Operation	No-Operation	No-Operation	No-Operation

Example

```
HERE    BTFSC   FLAG,1
FALSE   GOTO    PROCESS_CODE
TRUE    •
        •
        •
```

Before Instruction
PC = address HERE
After Instruction
if FLAG<1> = 0,
PC = address FALSE
if FLAG<1> = 1,
PC = address TRUE

CALL — Call Subroutine

Syntax: [*label*] CALL k

Operands: $0 \le k \le 2047$

Operation: (PC)+ 1→ TOS,
k → PC<10:0>,
(PCLATH<4:3>) → PC<12:11>

Status Affected: None

Encoding:

10	0kkk	kkkk	kkkk

Description: Call Subroutine. First, return address (PC+1) is pushed onto the stack. The eleven bit immediate address is loaded into PC bits <10:0>. The upper bits of the PC are loaded from PCLATH. CALL is a two cycle instruction.

Words: 1

Cycles: 2

Q Cycle Activity:

	Q1	Q2	Q3	Q4
1st Cycle	Decode	Read literal 'k', Push PC to Stack	Process data	Write to PC
2nd Cycle	No-Operation	No-Operation	No-Operation	No-Operation

Example

```
HERE    CALL    THERE
```

Before Instruction
PC = Address HERE
After Instruction
PC = Address THERE
TOS = Address HERE+1

CLRF **Clear f**

Syntax: [*label*] CLRF f

Operands: $0 \le f \le 127$

Operation: 00h → (f)
1 → Z

Status Affected: Z

Encoding:

00	0001	1fff	ffff

Description: The contents of register 'f' are cleared and the Z bit is set.

Words: 1

Cycles: 1

Q Cycle Activity:

Q1	Q2	Q3	Q4
Decode	Read register 'f'	Process data	Write register 'f'

Example `CLRF FLAG_REG`

Before Instruction
FLAG_REG = 0x5A
After Instruction
FLAG_REG = 0x00
Z = 1

CLRW **Clear W**

Syntax: [*label*] CLRW

Operands: None

Operation: 00h → (W)
1 → Z

Status Affected: Z

Encoding:

00	0001	0xxx	xxxx

Description: W register is cleared. Zero bit (Z) is set.

Words: 1

Cycles: 1

Q Cycle Activity:

Q1	Q2	Q3	Q4
Decode	No-Operation	Process data	Write to W

Example `CLRW`

Before Instruction
W = 0x5A
After Instruction
W = 0x00
Z = 1

CLRWDT **Clear Watchdog Timer**

Syntax: [*label*] CLRWDT

Operands: None

Operation: 00h → WDT
0 → WDT prescaler,
1 → $\overline{TO}$
1 → $\overline{PD}$

Status Affected: $\overline{TO}$, $\overline{PD}$

Encoding:

00	0000	0110	0100

Description: `CLRWDT` instruction resets the Watchdog Timer. It also resets the prescaler of the WDT. Status bits $\overline{TO}$ and $\overline{PD}$ are set.

Words: 1

Cycles: 1

Q Cycle Activity:

Q1	Q2	Q3	Q4
Decode	No-Operation	Process data	Clear WDT Counter

Example `CLRWDT`

Before Instruction
WDT counter = ?
After Instruction
WDT counter = 0x00
WDT prescaler = 0
$\overline{TO}$ = 1
$\overline{PD}$ = 1

COMF — Complement f

Syntax: [*label*] COMF f,d

Operands: $0 \le f \le 127$
$d \in [0,1]$

Operation: $(\bar{f}) \rightarrow$ (destination)

Status Affected: Z

Encoding:

00	1001	dfff	ffff

Description: The contents of register 'f' are complemented. If 'd' is 0 the result is stored in W. If 'd' is 1 the result is stored back in register 'f'.

Words: 1

Cycles: 1

Q Cycle Activity:

Q1	Q2	Q3	Q4
Decode	Read register 'f'	Process data	Write to destination

Example

```
COMF        REG1,0
```

Before Instruction
REG1 = 0x13
After Instruction
REG1 = 0x13
W = 0xEC

DECF — Decrement f

Syntax: [*label*] DECF f,d

Operands: $0 \le f \le 127$
$d \in [0,1]$

Operation: (f) - 1 $\rightarrow$ (destination)

Status Affected: Z

Encoding:

00	0011	dfff	ffff

Description: Decrement register 'f'. If 'd' is 0 the result is stored in the W register. If 'd' is 1 the result is stored back in register 'f'.

Words: 1

Cycles: 1

Q Cycle Activity:

Q1	Q2	Q3	Q4
Decode	Read register 'f'	Process data	Write to destination

Example

```
DECF    CNT, 1
```

Before Instruction
CNT = 0x01
Z = 0
After Instruction
CNT = 0x00
Z = 1

DECFSZ — Decrement f, Skip if 0

Syntax: [*label*] DECFSZ f,d

Operands: $0 \le f \le 127$
$d \in [0,1]$

Operation: (f) - 1 $\rightarrow$ (destination);
skip if result = 0

Status Affected: None

Encoding:

00	1011	dfff	ffff

Description: The contents of register 'f' are decremented. If 'd' is 0 the result is placed in the W register. If 'd' is 1 the result is placed back in register 'f'.
If the result is 1, the next instruction, is executed. If the result is 0, then a NOP is executed instead making it a 2TCY instruction.

Words: 1

Cycles: 1(2)

Q Cycle Activity:

Q1	Q2	Q3	Q4
Decode	Read register 'f'	Process data	Write to destination

If Skip: (2nd Cycle)

Q1	Q2	Q3	Q4
No-Operation	No-Operation	No-Operation	No-Operation

Example

```
HERE      DECFSZ    CNT, 1
          GOTO      LOOP
CONTINUE  •
          •
          •
```

Before Instruction
PC = address HERE
After Instruction
CNT = CNT - 1
if CNT = 0,
PC = address CONTINUE
if CNT ≠ 0,
PC = address HERE+1

GOTO — Unconditional Branch

Syntax:	[*label*] GOTO k
Operands:	$0 \le k \le 2047$
Operation:	k → PC<10:0> PCLATH<4:3> → PC<12:11>
Status Affected:	None
Encoding:	`10` `1kkk` `kkkk` `kkkk`
Description:	`GOTO` is an unconditional branch. The eleven bit immediate value is loaded into PC bits <10:0>. The upper bits of PC are loaded from PCLATH<4:3>. `GOTO` is a two cycle instruction.
Words:	1
Cycles:	2

Q Cycle Activity:

	Q1	Q2	Q3	Q4
1st Cycle	Decode	Read literal 'k'	Process data	Write to PC
2nd Cycle	No-Operation	No-Operation	No-Operation	No-Operation

Example `GOTO THERE`

After Instruction
PC = Address `THERE`

INCF — Increment f

Syntax:	[*label*] INCF f,d
Operands:	$0 \le f \le 127$ $d \in [0,1]$
Operation:	(f) + 1 → (destination)
Status Affected:	Z
Encoding:	`00` `1010` `dfff` `ffff`
Description:	The contents of register 'f' are incremented. If 'd' is 0 the result is placed in the W register. If 'd' is 1 the result is placed back in register 'f'.
Words:	1
Cycles:	1

Q Cycle Activity:

Q1	Q2	Q3	Q4
Decode	Read register 'f'	Process data	Write to destination

Example `INCF CNT, 1`

Before Instruction
CNT = 0xFF
Z = 0

After Instruction
CNT = 0x00
Z = 1

INCFSZ — Increment f, Skip if 0

Syntax: [*label*] INCFSZ f,d

Operands: $0 \le f \le 127$
$d \in [0,1]$

Operation: (f) + 1 → (destination), skip if result = 0

Status Affected: None

Encoding:

00	1111	dfff	ffff

Description: The contents of register 'f' are incremented. If 'd' is 0 the result is placed in the W register. If 'd' is 1 the result is placed back in register 'f'.
If the result is 1, the next instruction is executed. If the result is 0, a NOP is executed instead making it a 2TCY instruction.

Words: 1

Cycles: 1(2)

Q Cycle Activity:

Q1	Q2	Q3	Q4
Decode	Read register 'f'	Process data	Write to destination

If Skip: (2nd Cycle)

Q1	Q2	Q3	Q4
No-Operation	No-Operation	No-Operation	No-Operation

Example

```
HERE      INCFSZ     CNT, 1
          GOTO       LOOP
CONTINUE  •
          •
          •
```

Before Instruction
PC = address HERE
After Instruction
CNT = CNT + 1
if CNT= 0,
PC = address CONTINUE
if CNT≠ 0,
PC = address HERE +1

IORLW — Inclusive OR Literal with W

Syntax: [*label*] IORLW k

Operands: $0 \le k \le 255$

Operation: (W) .OR. k → (W)

Status Affected: Z

Encoding:

11	1000	kkkk	kkkk

Description: The contents of the W register is OR'ed with the eight bit literal 'k'. The result is placed in the W register.

Words: 1

Cycles: 1

Q Cycle Activity:

Q1	Q2	Q3	Q4
Decode	Read literal 'k'	Process data	Write to W

Example

```
IORLW   0x35
```

Before Instruction
W = 0x9A
After Instruction
W = 0xBF
Z = 1

IORWF — Inclusive OR W with f

Syntax: [*label*] IORWF f,d

Operands: $0 \le f \le 127$
$d \in [0,1]$

Operation: (W) .OR. (f) → (destination)

Status Affected: $\overline{Z}$

Encoding:

00	0100	dfff	ffff

Description: Inclusive OR the W register with register 'f'. If 'd' is 0 the result is placed in the W register. If 'd' is 1 the result is placed back in register 'f'.

Words: 1

Cycles: 1

Q Cycle Activity:

Q1	Q2	Q3	Q4
Decode	Read register 'f'	Process data	Write to destination

Example

```
IORWF        RESULT, 0
```

Before Instruction
RESULT = 0x13
W = 0x91

After Instruction
RESULT = 0x13
W = 0x93
Z = 1

MOVF — Move f

Syntax: [*label*] MOVF f,d

Operands: $0 \le f \le 127$
$d \in [0,1]$

Operation: (f) → (destination)

Status Affected: Z

Encoding:

00	1000	dfff	ffff

Description: The contents of register f is moved to a destination dependant upon the status of d. If d = 0, destination is W register. If d = 1, the destination is file register f itself. d = 1 is useful to test a file register since status flag Z is affected.

Words: 1

Cycles: 1

Q Cycle Activity:

Q1	Q2	Q3	Q4
Decode	Read register 'f'	Process data	Write to destination

Example

```
MOVF     FSR, 0
```

After Instruction
W = value in FSR register
Z = 1

MOVLW — Move Literal to W

Syntax: [*label*] MOVLW k

Operands: $0 \le k \le 255$

Operation: k → (W)

Status Affected: None

Encoding:

11	00xx	kkkk	kkkk

Description: The eight bit literal 'k' is loaded into W register. The don't cares will assemble as 0's.

Words: 1

Cycles: 1

Q Cycle Activity:

Q1	Q2	Q3	Q4
Decode	Read literal 'k'	Process data	Write to W

Example

```
MOVLW    0x5A
```

After Instruction
W = 0x5A

MOVWF — Move W to f

Syntax: [*label*] MOVWF f

Operands: $0 \le f \le 127$

Operation: (W) → (f)

Status Affected: None

Encoding:

00	0000	1fff	ffff

Description: Move data from W register to register 'f'.

Words: 1

Cycles: 1

Q Cycle Activity:

Q1	Q2	Q3	Q4
Decode	Read register 'f'	Process data	Write register 'f'

Example

```
MOVWF    OPTION_REG
```

Before Instruction
OPTION = 0xFF
W = 0x4F

After Instruction
OPTION = 0x4F
W = 0x4F

NOP	No Operation
Syntax:	[*label*] NOP
Operands:	None
Operation:	No operation
Status Affected:	None
Encoding:	00 | 0000 | 0xx0 | 0000
Description:	No operation.
Words:	1
Cycles:	1

Q Cycle Activity:

Q1	Q2	Q3	Q4
Decode	No-Operation	No-Operation	No-Operation

Example `NOP`

OPTION	Load Option Register
Syntax:	[*label*] OPTION
Operands:	None
Operation:	(W) → OPTION
Status Affected:	None
Encoding:	00 | 0000 | 0110 | 0010
Description:	The contents of the W register are loaded in the OPTION register. This instruction is supported for code compatibility with PIC16C5X products. Since OPTION is a readable/writable register, the user can directly address it.
Words:	1
Cycles:	1
Example	**To maintain upward compatibility with future PIC16CXX products, do not use this instruction.**

RETFIE	Return from Interrupt
Syntax:	[*label*] RETFIE
Operands:	None
Operation:	TOS → PC, 1 → GIE
Status Affected:	None
Encoding:	00 | 0000 | 0000 | 1001
Description:	Return from Interrupt. Stack is POPed and Top of Stack (TOS) is loaded in the PC. Interrupts are enabled by setting Global Interrupt Enable bit, GIE (INTCON<7>). This is a two cycle instruction.
Words:	1
Cycles:	2

Q Cycle Activity:

	Q1	Q2	Q3	Q4
1st Cycle	Decode	No-Operation	Set the GIE bit	Pop from the Stack
2nd Cycle	No-Operation	No-Operation	No-Operation	No-Operation

Example `RETFIE`

After Interrupt
PC = TOS
GIE = 1

RETLW — Return with Literal in W

Syntax:	[*label*] RETLW k
Operands:	$0 \le k \le 255$
Operation:	k → (W); TOS → PC
Status Affected:	None
Encoding:	11 | 01xx | kkkk | kkkk
Description:	The W register is loaded with the eight bit literal 'k'. The program counter is loaded from the top of the stack (the return address). This is a two cycle instruction.
Words:	1
Cycles:	2

Q Cycle Activity:

	Q1	Q2	Q3	Q4
1st Cycle	Decode	Read literal 'k'	No-Operation	Write to W, Pop from the Stack
2nd Cycle	No-Operation	No-Operation	No-Operation	No-Operation

Example

```
CALL TABLE  ;W contains table
            ;offset value
•            ;W now has table value
•
•
TABLE ADDWF PC   ;W = offset
      RETLW k1   ;Begin table
      RETLW k2   ;
•
•
•
      RETLW kn   ; End of table
```

Before Instruction
W = 0x07

After Instruction
W = value of k8

RETURN — Return from Subroutine

Syntax:	[*label*] RETURN
Operands:	None
Operation:	TOS → PC
Status Affected:	None
Encoding:	00 | 0000 | 0000 | 1000
Description:	Return from subroutine. The stack is POPed and the top of the stack (TOS) is loaded into the program counter. This is a two cycle instruction.
Words:	1
Cycles:	2

Q Cycle Activity:

	Q1	Q2	Q3	Q4
1st Cycle	Decode	No-Operation	No-Operation	Pop from the Stack
2nd Cycle	No-Operation	No-Operation	No-Operation	No-Operation

Example

```
RETURN
```

After Interrupt
PC = TOS

RLF — Rotate Left f through Carry

Syntax:	[*label*] RLF f,d
Operands:	$0 \le f \le 127$ $d \in [0,1]$
Operation:	See description below
Status Affected:	C
Encoding:	`00` `1101` `dfff` `ffff`
Description:	The contents of register 'f' are rotated one bit to the left through the Carry Flag. If 'd' is 0 the result is placed in the W register. If 'd' is 1 the result is stored back in register 'f'.

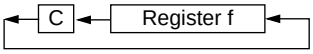

Words:	1
Cycles:	1

Q Cycle Activity:

Q1	Q2	Q3	Q4
Decode	Read register 'f'	Process data	Write to destination

Example

```
RLF        REG1,0
```

Before Instruction
```
REG1   =   1110 0110
C      =   0
```
After Instruction
```
REG1   =   1110 0110
W      =   1100 1100
C      =   1
```

RRF — Rotate Right f through Carry

Syntax:	[*label*] RRF f,d
Operands:	$0 \le f \le 127$ $d \in [0,1]$
Operation:	See description below
Status Affected:	C
Encoding:	`00` `1100` `dfff` `ffff`
Description:	The contents of register 'f' are rotated one bit to the right through the Carry Flag. If 'd' is 0 the result is placed in the W register. If 'd' is 1 the result is placed back in register 'f'.

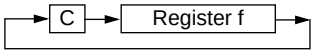

Words:	1
Cycles:	1

Q Cycle Activity:

Q1	Q2	Q3	Q4
Decode	Read register 'f'	Process data	Write to destination

Example

```
RRF        REG1,0
```

Before Instruction
```
REG1   =   1110 0110
C      =   0
```
After Instruction
```
REG1   =   1110 0110
W      =   0111 0011
C      =   0
```

SLEEP

Syntax: [*label*] SLEEP

Operands: None

Operation: 00h → WDT,
0 → WDT prescaler,
1 → $\overline{TO}$,
0 → $\overline{PD}$

Status Affected: $\overline{TO}$, $\overline{PD}$

Encoding:

00	0000	0110	0011

Description: The power-down status bit, $\overline{PD}$ is cleared. Time-out status bit, $\overline{TO}$ is set. Watchdog Timer and its prescaler are cleared.
The processor is put into SLEEP mode with the oscillator stopped. See Section 14.8 for more details.

Words: 1

Cycles: 1

Q Cycle Activity:

Q1	Q2	Q3	Q4
Decode	No-Operation	No-Operation	Go to Sleep

Example: SLEEP

SUBLW Subtract W from Literal

Syntax: [*label*] SUBLW k

Operands: $0 \le k \le 255$

Operation: k - (W) → (W)

Status Affected: C, DC, Z

Encoding:

11	110x	kkkk	kkkk

Description: The W register is subtracted (2's complement method) from the eight bit literal 'k'. The result is placed in the W register.

Words: 1

Cycles: 1

Q Cycle Activity:

Q1	Q2	Q3	Q4
Decode	Read literal 'k'	Process data	Write to W

Example 1: SUBLW 0x02

Before Instruction
W = 1
C = ?
Z = ?

After Instruction
W = 1
C = 1; result is positive
Z = 0

Example 2: Before Instruction
W = 2
C = ?
Z = ?

After Instruction
W = 0
C = 1; result is zero
Z = 1

Example 3: Before Instruction
W = 3
C = ?
Z = ?

After Instruction
W = 0xFF
C = 0; result is negative
Z = 0

SUBWF — Subtract W from f

Syntax: [*label*] SUBWF f,d

Operands: $0 \le f \le 127$
$d \in [0,1]$

Operation: (f) - (W) → (destination)

Status Affected: C, DC, Z

Encoding:

00	0010	dfff	ffff

Description: Subtract (2's complement method) W register from register 'f'. If 'd' is 0 the result is stored in the W register. If 'd' is 1 the result is stored back in register 'f'.

Words: 1

Cycles: 1

Q Cycle Activity:

Q1	Q2	Q3	Q4
Decode	Read register 'f'	Process data	Write to destination

Example 1: `SUBWF REG1,1`

Before Instruction

REG1 = 3
W = 2
C = ?
Z = ?

After Instruction

REG1 = 1
W = 2
C = 1; result is positive
Z = 0

Example 2: Before Instruction

REG1 = 2
W = 2
C = ?
Z = ?

After Instruction

REG1 = 0
W = 2
C = 1; result is zero
Z = 1

Example 3: Before Instruction

REG1 = 1
W = 2
C = ?
Z = ?

After Instruction

REG1 = 0xFF
W = 2
C = 0; result is negative
Z = 0

SWAPF — Swap Nibbles in f

Syntax: [*label*] SWAPF f,d

Operands: $0 \le f \le 127$
$d \in [0,1]$

Operation: (f<3:0>) → (destination<7:4>),
(f<7:4>) → (destination<3:0>)

Status Affected: None

Encoding:

00	1110	dfff	ffff

Description: The upper and lower nibbles of register 'f' are exchanged. If 'd' is 0 the result is placed in W register. If 'd' is 1 the result is placed in register 'f'.

Words: 1

Cycles: 1

Q Cycle Activity:

Q1	Q2	Q3	Q4
Decode	Read register 'f'	Process data	Write to destination

Example `SWAPF REG, 0`

Before Instruction

REG1 = 0xA5

After Instruction

REG1 = 0xA5
W = 0x5A

TRIS — Load TRIS Register

Syntax: [*label*] TRIS f

Operands: $5 \le f \le 7$

Operation: (W) → TRIS register f;

Status Affected: None

Encoding:

00	0000	0110	0fff

Description: The instruction is supported for code compatibility with the PIC16C5X products. Since TRIS registers are readable and writable, the user can directly address them.

Words: 1

Cycles: 1

Example

To maintain upward compatibility with future PIC16CXX products, do not use this instruction.

XORLW — Exclusive OR Literal with W

Syntax:	[*label*] XORLW k
Operands:	$0 \le k \le 255$
Operation:	(W) .XOR. k → (W)
Status Affected:	Z
Encoding:	11 | 1010 | kkkk | kkkk
Description:	The contents of the W register are XOR'ed with the eight bit literal 'k'. The result is placed in the W register.
Words:	1
Cycles:	1

Q Cycle Activity:

Q1	Q2	Q3	Q4
Decode	Read literal 'k'	Process data	Write to W

Example: `XORLW 0xAF`

Before Instruction

W = 0xB5

After Instruction

W = 0x1A

XORWF — Exclusive OR W with f

Syntax:	[*label*] XORWF f,d
Operands:	$0 \le f \le 127$ $d \in [0,1]$
Operation:	(W) .XOR. (f) → (destination)
Status Affected:	Z
Encoding:	00 | 0110 | dfff | ffff
Description:	Exclusive OR the contents of the W register with register 'f'. If 'd' is 0 the result is stored in the W register. If 'd' is 1 the result is stored back in register 'f'.
Words:	1
Cycles:	1

Q Cycle Activity:

Q1	Q2	Q3	Q4
Decode	Read register 'f'	Process data	Write to destination

Example `XORWF REG 1`

Before Instruction

REG = 0xAF
W = 0xB5

After Instruction

REG = 0x1A
W = 0xB5