FOR ASSEMBLY - FABRICATION

NOTE / 注释: ALL UPVC PIPE SCH 80, CLEAR PVC PIPE SCH 40 UNLESS STATED OTHERWISE.
所有UPVC管材规格为SCH 80,透明PVC管材规格为SCH 40,除非另有说明。

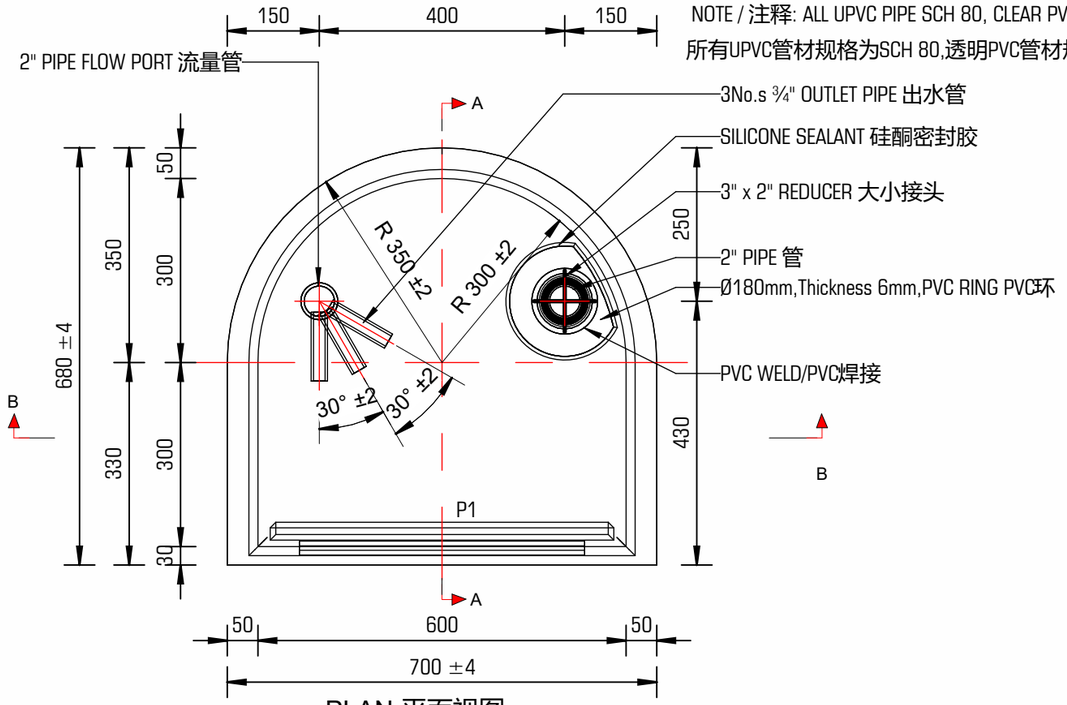

PLAN 平面视图

SCALE: 1 : 10

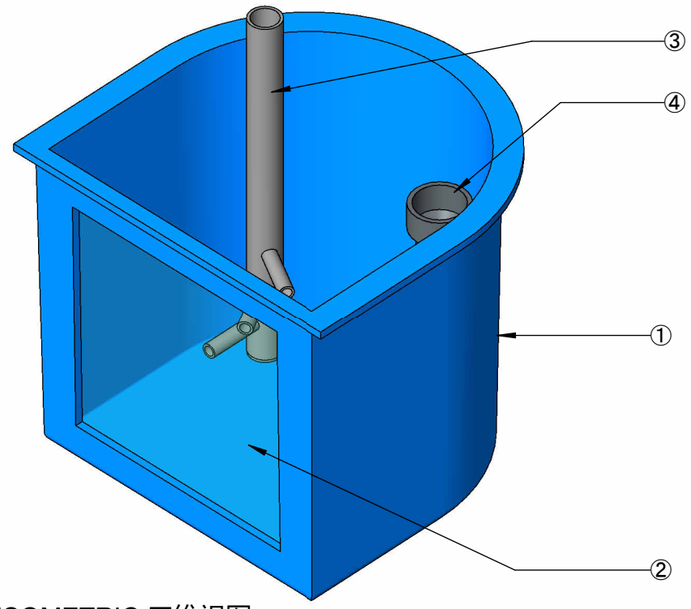

ISOMETRIC 三维视图

SCALE:

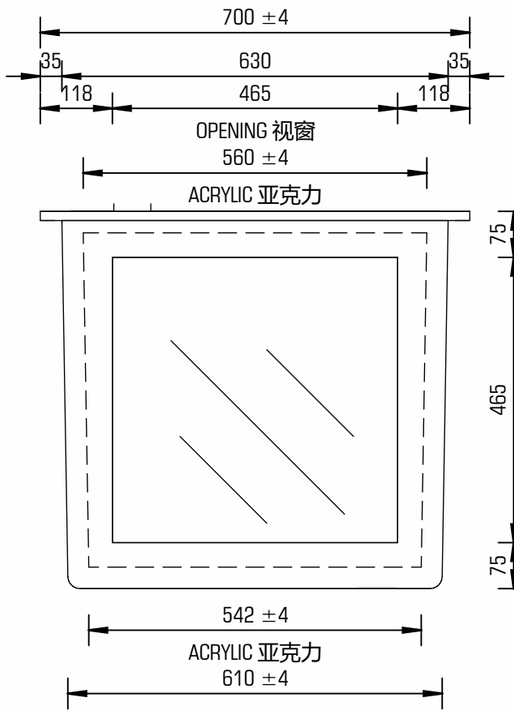

FRONT VIEW 前视图

SCALE: 1 : 10

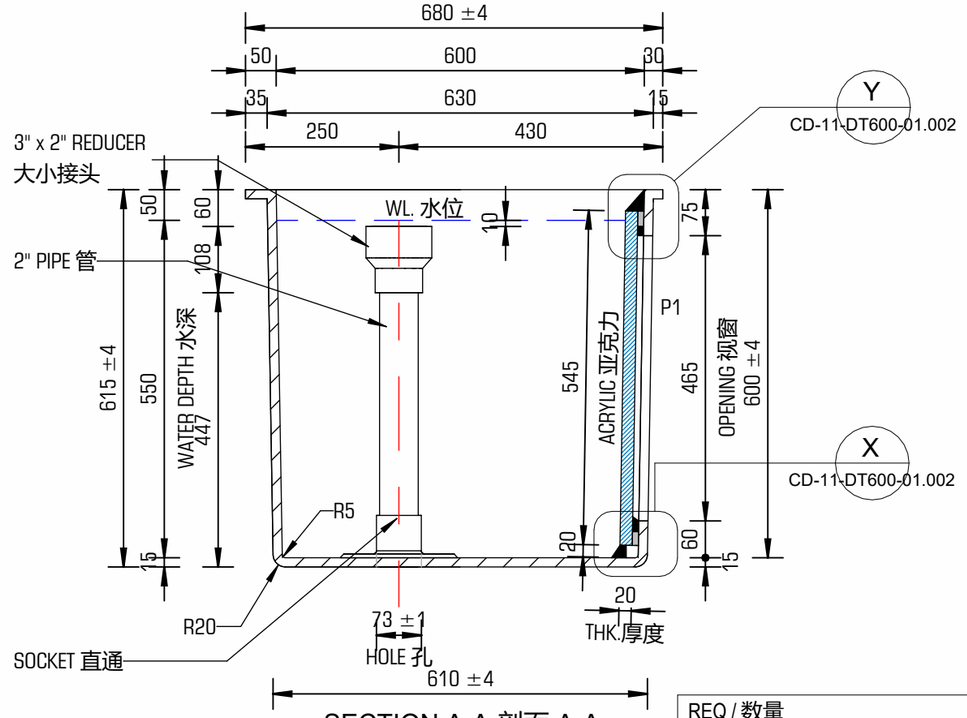

SECTION A-A 剖面 A-A

SCALE: 1 : 10

Assembly Name / 装配产品名	D-TANK 600 / 600 D型缸
Component ① / 组件 ①	FRP / 纤维
Component ② / 组件 ②	ACRYLIC P1 / 亚克力 P1
Component ③ / 组件 ③	2" FLOW PORT / 2" 流量管
Component ④ / 组件 ④	3" x 2" REDUCER 大小接头

REQ / 数量	3 SETS
TANK WEIGHT / 缸体重量	37.94kg
OPERATION WEIGHT / 运行重量	198.94kg
TOTAL HEIGHT / 总高度	615mm
WATER DEPTH / 水深	545mm
GROSS WATER VOLUME / 净水体体积	0.161m³
TANK COLOUR / 缸体颜色	RAL 5017 BLUE
SILICONE COLOR / 硅胶颜色	RAL 9005 BLACK
STAND/FRAME MATERIAL / 支架/框架材质	FRP

FACTORY ONLY
Drawings strictly for factory use. Not allowed to be shared externally.
仅供内部使用

DATE ISSUE / AMENDMENT

Drawing Reviewed / 图纸审核

Name / 姓名:

Date / 日期:

Quality Control / 质量控制

Dimension Inspection / 尺寸检验 ☐

Visual Inspection / 外观检验 ☐

Checked by Worker / 工人自检

Name / 姓名:

Date / 日期:

Checked by QC / 质检检验

Name / 姓名:

Date / 日期:

Quantity / 数量	3 SETS
Component page / 组件页	1/2
Full Set page / 总页	1/3

ADVANCED AQUARIUM TECHNOLOGIES
ADVANCED AQUARIUM TECHNOLOGIES PTY LTD
PO Box 693 MOOLOOLABA
QLD 4557 AUSTRALIA
P: +61 7 5476 5300
F: +61 7 5453 4311
E: office@advanced-aquariums.com
ACN 105 692 028

PROJECT
AQUARIUM OF GUAM

CLIENT
AAT

TITLE
D-TANK 600 WITH FLAT PANEL LAYOUT

ISSUED DATE	2026/01/19		
DRAWN	KW	DESIGNED	AG
CHECKED	AC	APPROVED	APG
SCALE	1 : 10	@A3	ISSUE
PROJ No	DWG No		
001-033	CD-11-DT600-01.001		

2026/1/27 15:45:09

NOTE / 注释: ALL UPVC PIPE SCH 80, CLEAR PVC PIPE SCH 40 UNLESS STATED OTHERWISE.
所有UPVC管材规格为SCH 80,透明PVC管材规格为SCH 40,除非另有说明。

FOR ASSEMBLY - FABRICATION

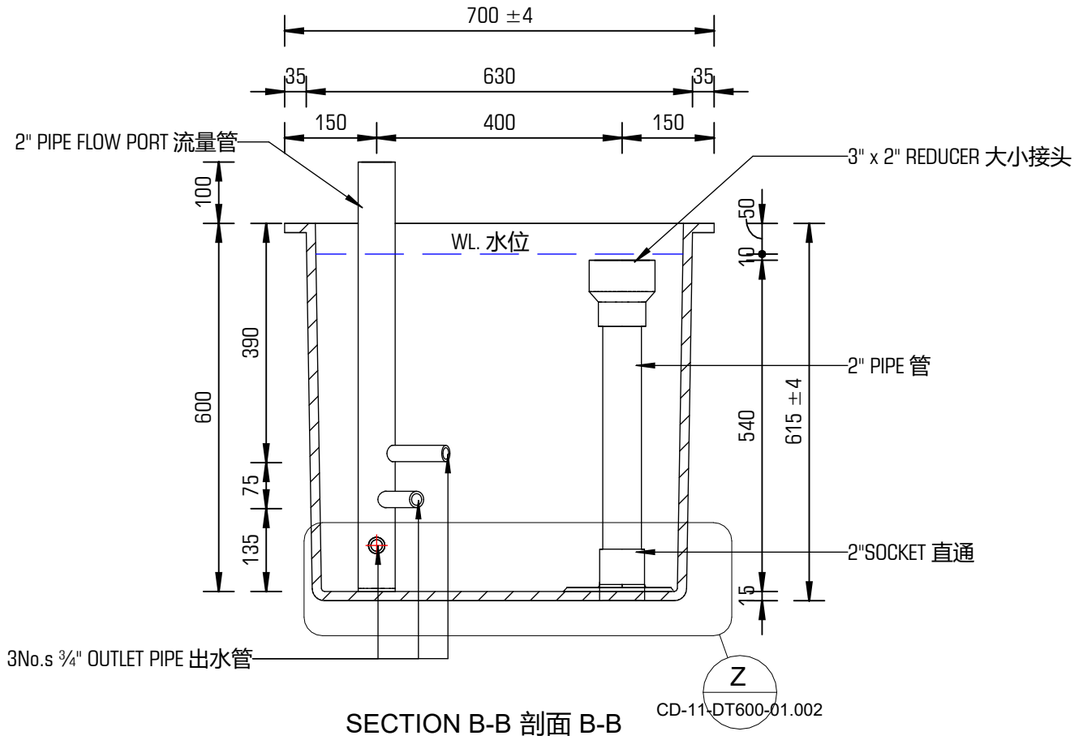

SECTION B-B 剖面 B-B

SCALE: 1 : 10

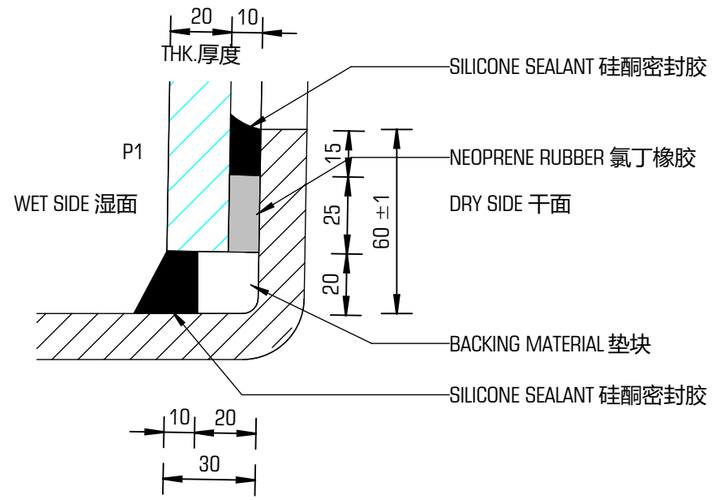

DETAIL X 详图 X

SCALE: 1 : 2

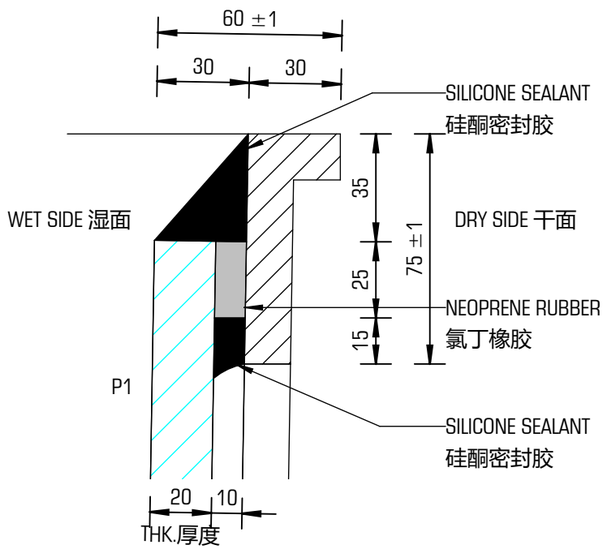

DETAIL Y 详图 Y

SCALE: 1 : 2

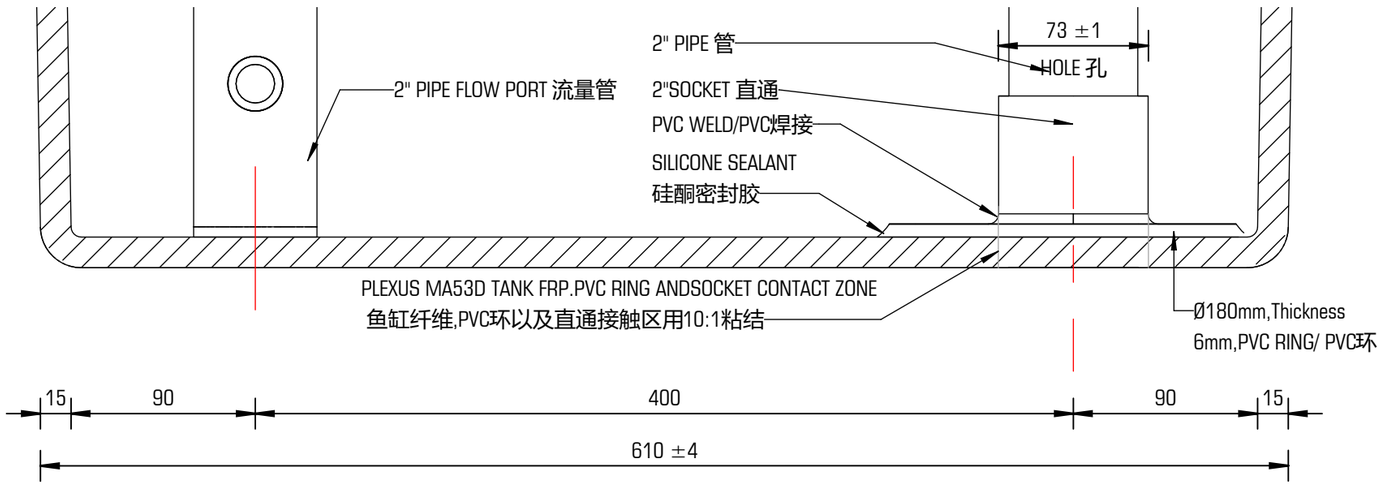

DETAIL Z 详图 Z

SCALE: 1 : 3

FACTORY ONLY
Drawings strictly for factory use. Not allowed to be shared externally.
仅供内部使用

DATE	ISSUE / AMENDMENT

Drawing Reviewed / 图纸审核

Name / 姓名:

Date / 日期:

Quality Control / 质量控制

Dimension Inspection / 尺寸检验 ☐

Visual Inspection / 外观检验 ☐

Checked by Worker / 工人自检

Name / 姓名:

Date / 日期:

Checked by QC / 质检检验

Name / 姓名:

Date / 日期:

Quantity / 数量	3 SETS
Component page / 组件页	2/2
Full Set page / 总页	2/3

ADVANCED AQUARIUM TECHNOLOGIES
ADVANCED AQUARIUM TECHNOLOGIES PTY LTD
PO Box 693 MOOLOOLABA
QLD 4557 AUSTRALIA
P: +61 7 5476 5300
F: +61 7 5453 4311
E: office@advanced-aquariums.com
ACN 105 692 028

PROJECT
AQUARIUM OF GUAM

CLIENT
AAT

TITLE
D-TANK 600 WITH FLAT PANEL SECTION

ISSUED DATE	2026/01/19		
DRAWN	KW	DESIGNED	AG
CHECKED	AC	APPROVED	APG
SCALE	@A3	ISSUE	
PROJ No	DWG No		
001-033	CD-11-DT600-01.002		

2026/1/27 15:45:09

NOTE / 注释: ALL UPVC PIPE SCH 80, CLEAR PVC PIPE SCH 40 UNLESS STATED OTHERWISE.
所有UPVC管材规格为SCH 80,透明PVC管材规格为SCH 40,除非另有说明。

FOR ASSEMBLY - FABRICATION

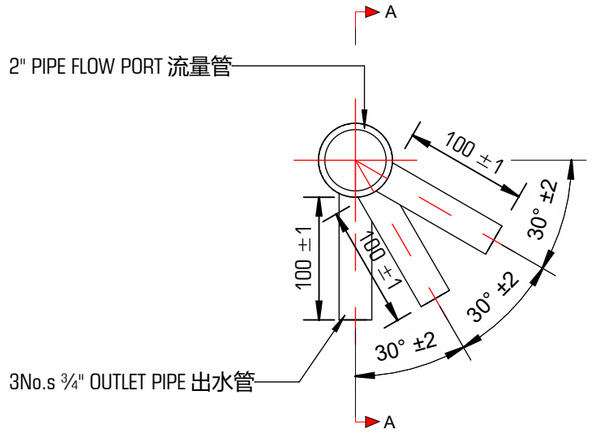

FLOW PORT PLAN
SCALE: 1 : 5

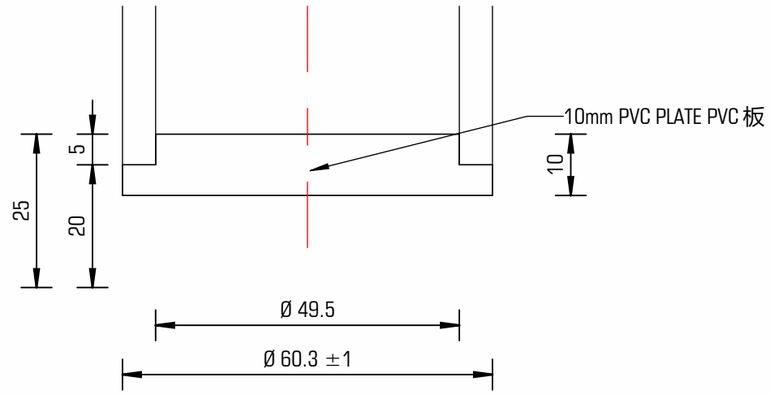

DETAIL X 详图 X
SCALE: 1 : 1

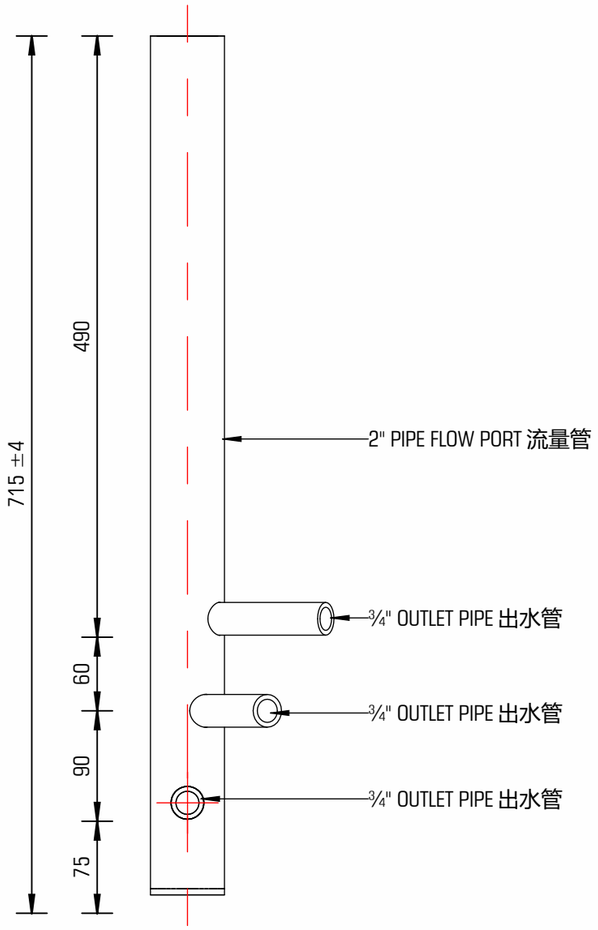

FRONT VIEW 前视图
SCALE: 1 : 5

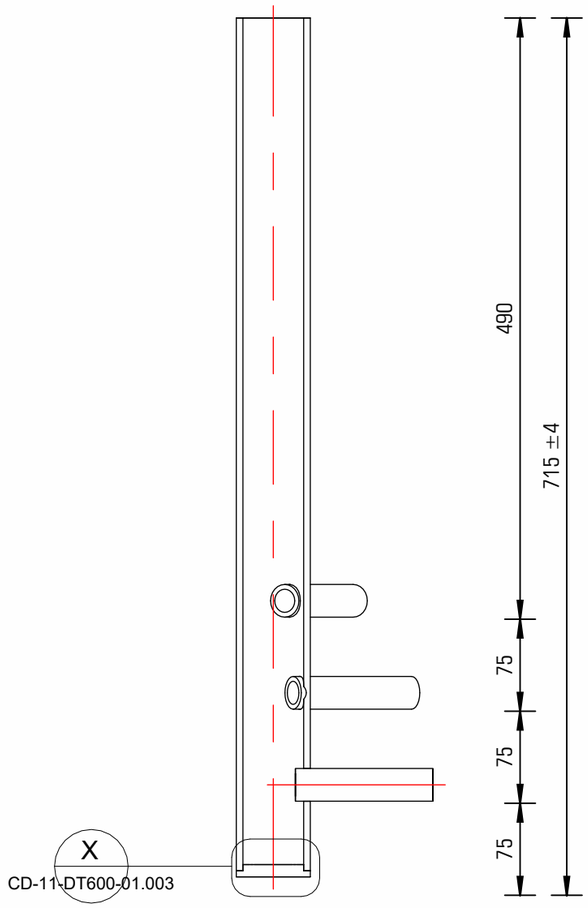

SECTION A-A 剖面 A-A
SCALE: 1 : 5

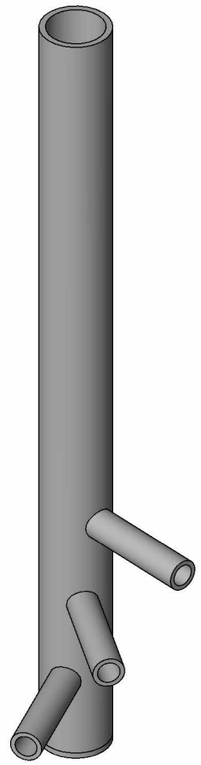

FLOW PORT ISOMETRIC
SCALE:

Component ③ / 组件 ③	2" PIPE FLOW PORT / 2" 流量管
Color / 颜色	GREY / 灰色
Material / 材质	PVC

2026/1/27 15:45:10

FACTORY ONLY
Drawings strictly for factory use. Not allowed to be shared externally.
仅供内部使用

DATE ISSUE / AMENDMENT

Drawing Reviewed / 图纸审核
Name / 姓名:
Date / 日期:

Quality Control / 质量控制
Dimension Inspection / 尺寸检验 ☐
Visual Inspection / 外观检验 ☐

Checked by Worker / 工人自检
Name / 姓名:
Date / 日期:

Checked by QC / 质检检验
Name / 姓名:
Date / 日期:

Quantity / 数量	3 SETS
Component page / 组件页	1/1
Full Set page / 总页	3/3

ADVANCED AQUARIUM TECHNOLOGIES
ADVANCED AQUARIUM TECHNOLOGIES PTY LTD
PO Box 693 MOOLOOLABA
QLD 4557 AUSTRALIA
P: +61 7 5476 5300
F: +61 7 5453 4311
E: office@advanced-aquariums.com
ACN 105 692 028

PROJECT
AQUARIUM OF GUAM

CLIENT
AAT

TITLE
D-TANK 600 WITH FLAT PANEL FLOW PORT

ISSUED DATE	2026/01/19		
DRAWN	KW	DESIGNED	AG
CHECKED	AC	APPROVED	APG
SCALE	@A3	ISSUE	
PROJ No	001-033	DWG No	CD-11-DT600-01.003