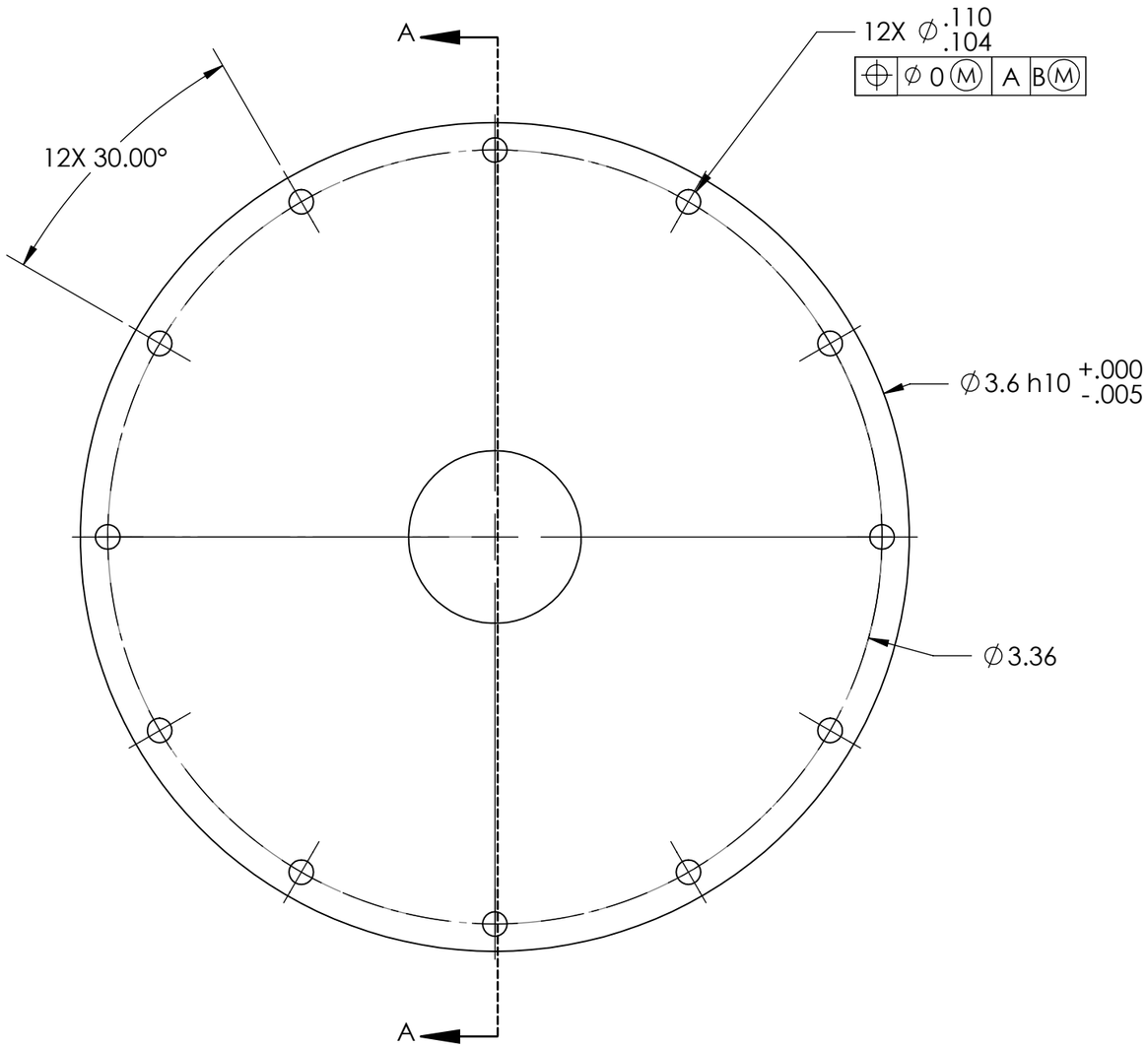

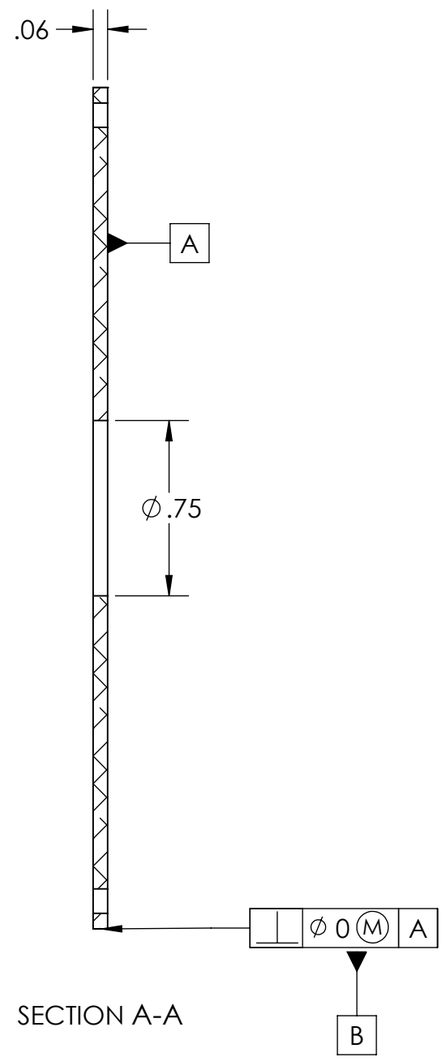

SECTION A-A

UOS ⌓ 0.05 A B

UNTOLERANCED DIMENSIONS ARE BASIC

UNLESS OTHERWISE SPECIFIED: DIMENSIONS ARE IN MILLIMETERS SURFACE FINISH: TOLERANCES: LINEAR: ANGULAR:	FINISH: 4			DEBURR AND BREAK SHARP EDGES	DO NOT SCALE DRAWING	REVISION
	NAME	SIGNATURE	DATE		TITLE: End cap	
DRAWN	RCB					
CHK'D	CWW					
APPV'D						
MFG						
Q.A				MATERIAL: 6061 Al	DWG NO. 0302-A	A3
				WEIGHT:	SCALE:1.5:1	SHEET 1 OF 1