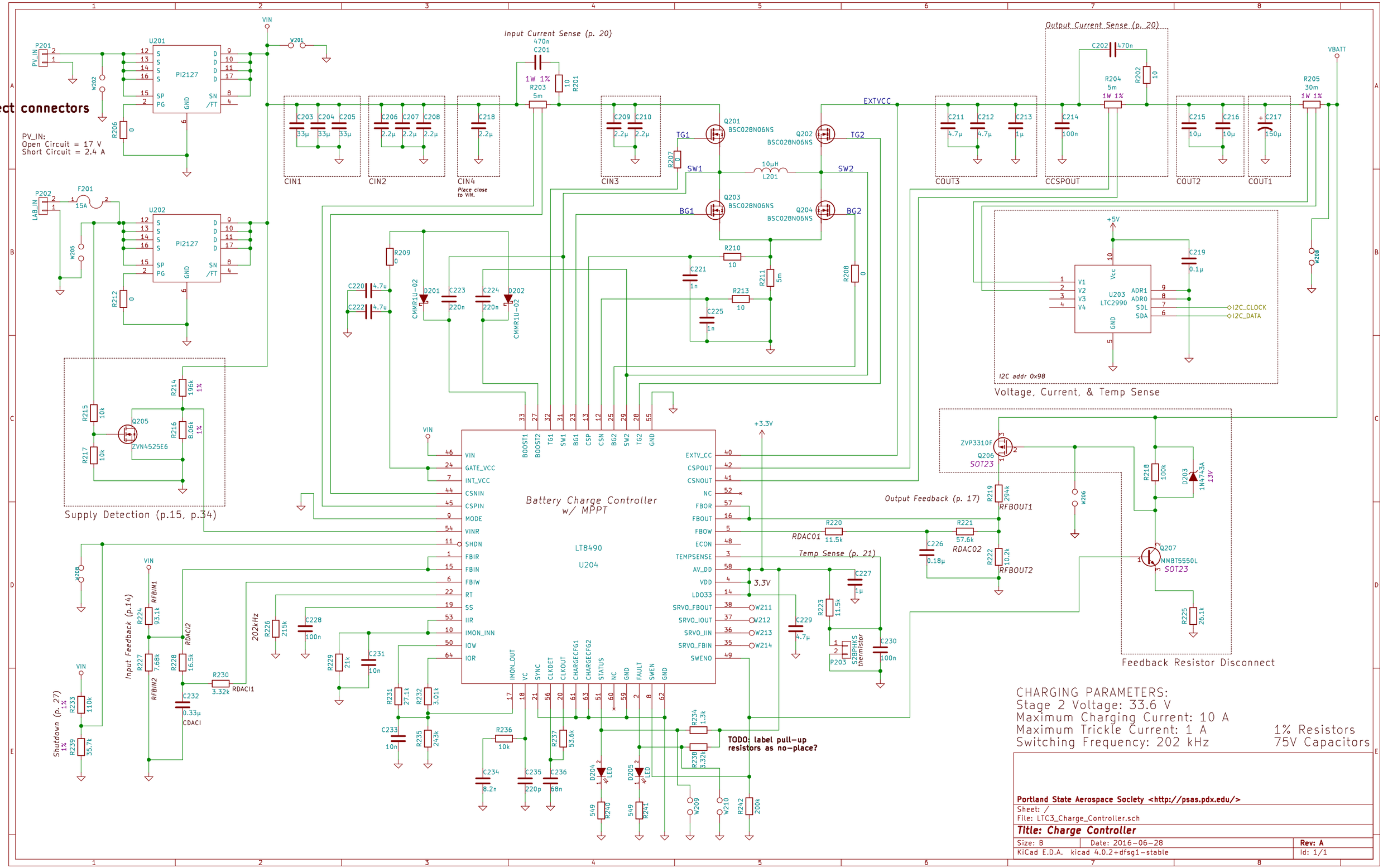
select connectors
PV_IN:
Open Circuit = 17 V
Short Circuit = 2.4 A
Input Current Sense (p. 20)
Output Current Sense (p. 20)
Battery Charge Controller
w/ MPPT
LT8490
U204
Voltage, Current, & Temp Sense
I2C addr 0x98
Supply Detection (p.15, p.34)
Input Feedback (p.14)
Shutdown (p. 27)
Output Feedback (p. 17)
Temp Sense (p. 21)
Feedback Resistor Disconnect
202kHz
TODO: label pull-up resistors as no-place?
CHARGING PARAMETERS:
Stage 2 Voltage: 33.6 V
Maximum Charging Current: 10 A
Maximum Trickle Current: 1 A
Switching Frequency: 202 kHz
1% Resistors
75V Capacitors
Portland State Aerospace Society <http://psas.pdx.edu/>
Sheet: /
File: LTC3_Charge_Controller.sch
Title: Charge Controller
Size: B
Date: 2016-06-28
Rev: A
KiCad E.D.A. kicad 4.0.2+dfsg1-stable
Id: 1/1