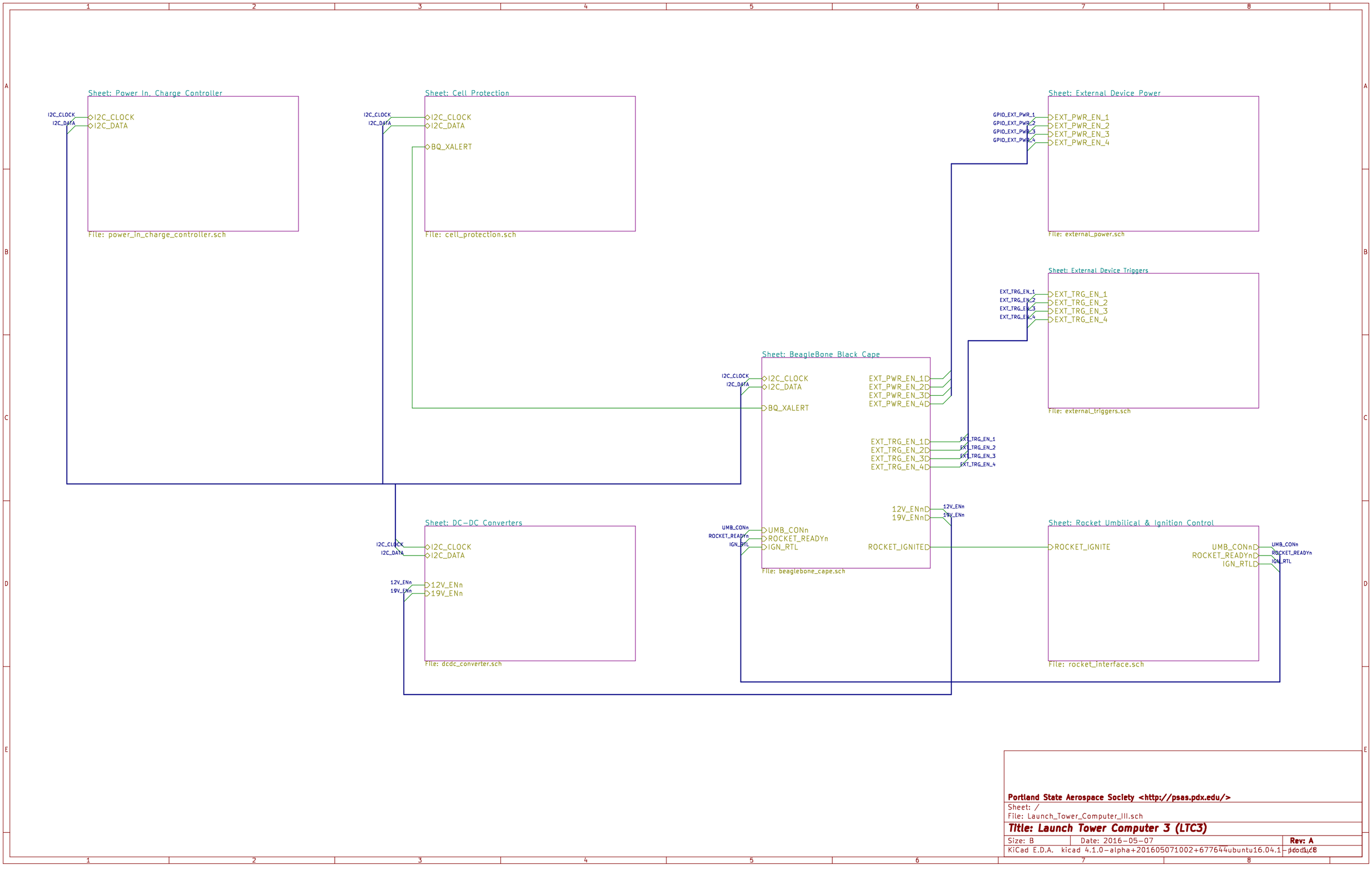
Sheet: Power In, Charge Controller
I2C_CLOCK
I2C_DATA
File: power_in_charge_controller.sch
Sheet: Cell Protection
I2C_CLOCK
I2C_DATA
BQ_XALERT
File: cell_protection.sch
Sheet: External Device Power
GPIO_EXT_PWR_1
GPIO_EXT_PWR_2
GPIO_EXT_PWR_3
GPIO_EXT_PWR_4
EXT_PWR_EN_1
EXT_PWR_EN_2
EXT_PWR_EN_3
EXT_PWR_EN_4
File: external_power.sch
Sheet: External Device Triggers
EXT_TRG_EN_1
EXT_TRG_EN_2
EXT_TRG_EN_3
EXT_TRG_EN_4
File: external_triggers.sch
Sheet: BeagleBone Black Cape
EXT_PWR_EN_1
EXT_PWR_EN_2
EXT_PWR_EN_3
EXT_PWR_EN_4
EXT_TRG_EN_1
EXT_TRG_EN_2
EXT_TRG_EN_3
EXT_TRG_EN_4
12V_ENn
19V_ENn
UMB_CONn
ROCKET_READYn
IGN_RTL
ROCKET_IGNITED
File: beaglebone_cape.sch
Sheet: DC-DC Converters
12V_ENn
19V_ENn
File: dcdc_converter.sch
Sheet: Rocket Umbilical & Ignition Control
ROCKET_IGNITE
UMB_CONn
ROCKET_READYn
IGN_RTL
File: rocket_interface.sch
Portland State Aerospace Society <http://psas.pdx.edu/>
Sheet: /
File: Launch_Tower_Computer_III.sch
Title: Launch Tower Computer 3 (LTC3)
Size: B
Date: 2016-05-07
Rev: A
KiCad E.D.A. kicad 4.1.0-alpha+201605071002+6776~44ubuntu16.04.1-product
Id 1/8

PV_IN:
Open Circuit = 17 V
Short Circuit = 2.4 A

Supply Detection (p.15, p.34)

Input Current Sense (p. 20)

Output Current Sense (p. 20)

Battery Charge Controller
w/ MPPT

LT8490

U204

Input Feedback (p.14)

Shutdown (p. 27)

Output Feedback (p. 17)

Temp Sense (p. 21)

Feedback Resistor Disconnect

Voltage, Current, & Temp Sense

I2C addr 0x98

TODO: select FET part

TODO: label pull-up resistors as no-place?

CHARGING PARAMETERS:
Stage 2 Voltage: 33.6 V
Maximum Charging Current: 10 A?
Maximum Trickle Current: 1 A
Switching Frequency: 202 kHz

1% Resistors
75V Capacitors

Portland State Aerospace Society <http://psas.pdx.edu/>
Sheet: /Power In, Charge Controller/
File: power_in_charge_controller.sch

Title: Power In, Battery Charge, & PV MPPT

Size: B | Date: 2016-05-07 | Rev: A
KiCad E.D.A. kicad 4.1.0-alpha+201605071002+677644ubuntu16.04.1 | Id: 2/8

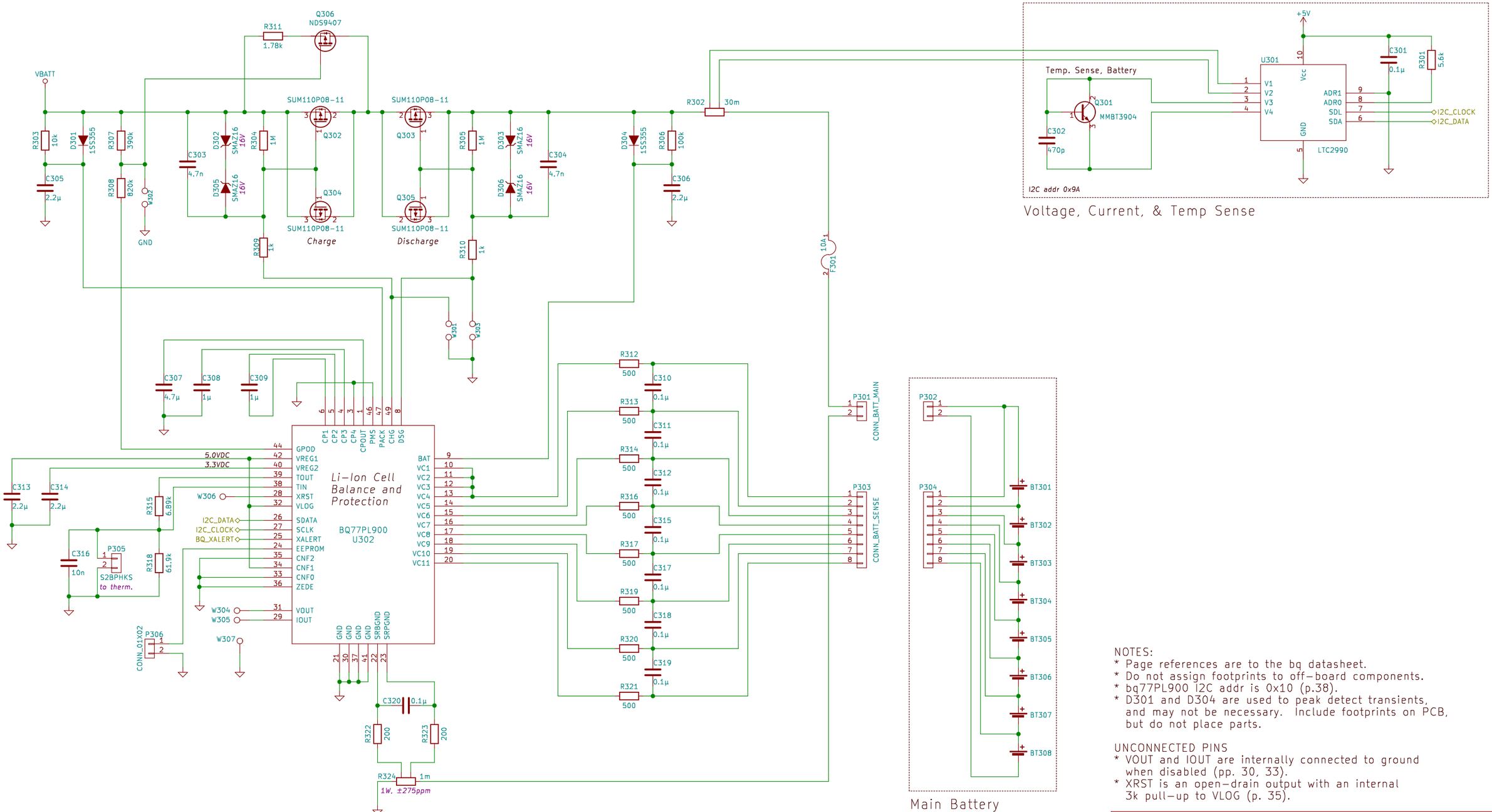

NOTES:
* Page references are to the bq datasheet.
* Do not assign footprints to off-board components.
* bq77PL900 I2C addr is 0x10 (p.38).
* D301 and D304 are used to peak detect transients, and may not be necessary. Include footprints on PCB, but do not place parts.

UNCONNECTED PINS
* VOUT and IOUT are internally connected to ground when disabled (pp. 30, 33).
* XRST is an open-drain output with an internal 3k pull-up to VLOG (p. 35).

Portland State Aerospace Society <http://psas.pdx.edu/>

Sheet: /Cell Protection/
File: cell_protection.sch

Title: Battery Management

Size: B	Date: 2016-05-07	**Rev: A**
KiCad E.D.A. kicad 4.1.0-alpha+201605071002+677644ubuntu16.04.1-product		Id: 1/8

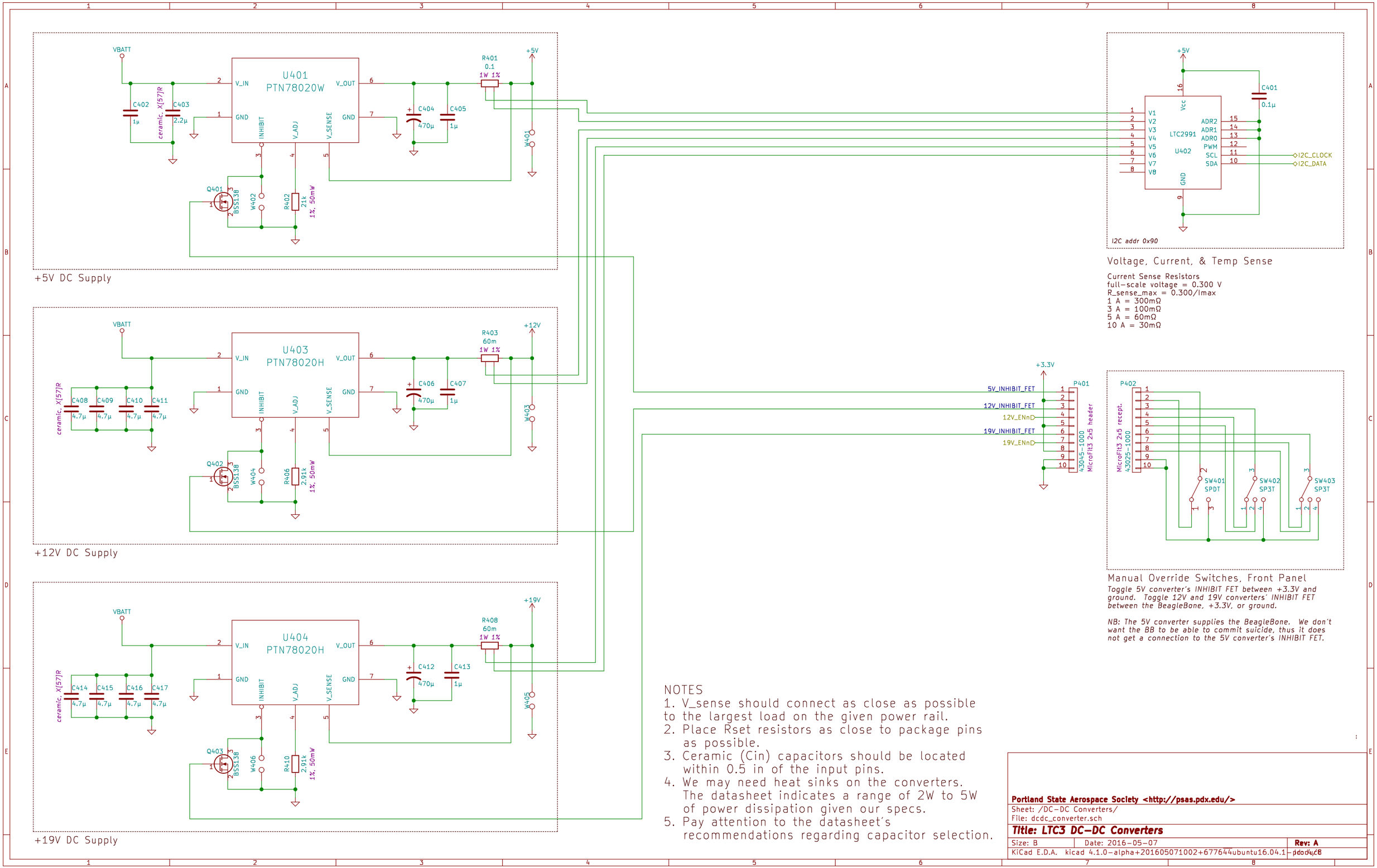

+5V DC Supply
U401
PTN78020W
VBATT
V_IN
V_OUT
GND
INHIBIT
V_ADJ
V_SENSE
C402
1µ
C403
2.2µ
ceramic, X[57]R
C404
470µ
C405
1µ
R401
0.1
1W 1%
+5V
W401
Q401
BSS138
W402
R402
21k
1%, 50mW
+12V DC Supply
U403
PTN78020H
R403
60m
1W 1%
+12V
C406
470µ
C407
1µ
W403
C408
4.7µ
C409
4.7µ
C410
4.7µ
C411
4.7µ
Q402
W404
R406
2.91k
1%, 50mW
+19V DC Supply
U404
PTN78020H
R408
60m
1W 1%
+19V
C412
470µ
C413
1µ
W405
C414
4.7µ
C415
4.7µ
C416
4.7µ
C417
4.7µ
Q403
W406
R410
2.91k
1%, 50mW
+5V
C401
0.1µ
LTC2991
U402
Vcc
V1
V2
V3
V4
V5
V6
V7
V8
ADR2
ADR1
ADR0
PWM
SCL
SDA
GND
I2C_CLOCK
I2C_DATA
I2C addr 0x90
Voltage, Current, & Temp Sense
Current Sense Resistors
full-scale voltage = 0.300 V
R_sense_max = 0.300/Imax
1 A = 300mΩ
3 A = 100mΩ
5 A = 60mΩ
10 A = 30mΩ
+3.3V
P401
5V_INHIBIT_FET
12V_INHIBIT_FET
12V_ENn
19V_INHIBIT_FET
19V_ENn
43045-1000
MicroFit3 2x5 header
P402
MicroFit3 2x5 recept.
43025-1000
SW401
SPDT
SW402
SP3T
SW403
SP3T
Manual Override Switches, Front Panel
Toggle 5V converter's INHIBIT FET between +3.3V and ground. Toggle 12V and 19V converters' INHIBIT FET between the BeagleBone, +3.3V, or ground.
NB: The 5V converter supplies the BeagleBone. We don't want the BB to be able to commit suicide, thus it does not get a connection to the 5V converter's INHIBIT FET.
NOTES
1. V_sense should connect as close as possible to the largest load on the given power rail.
2. Place Rset resistors as close to package pins as possible.
3. Ceramic (Cin) capacitors should be located within 0.5 in of the input pins.
4. We may need heat sinks on the converters. The datasheet indicates a range of 2W to 5W of power dissipation given our specs.
5. Pay attention to the datasheet's recommendations regarding capacitor selection.
Portland State Aerospace Society <http://psas.pdx.edu/>
Sheet: /DC-DC Converters/
File: dcdc_converter.sch
Title: LTC3 DC-DC Converters
Size: B
Date: 2016-05-07
Rev: A
KiCad E.D.A. kicad 4.1.0-alpha+201605071002+677644ubuntu16.04.1-product

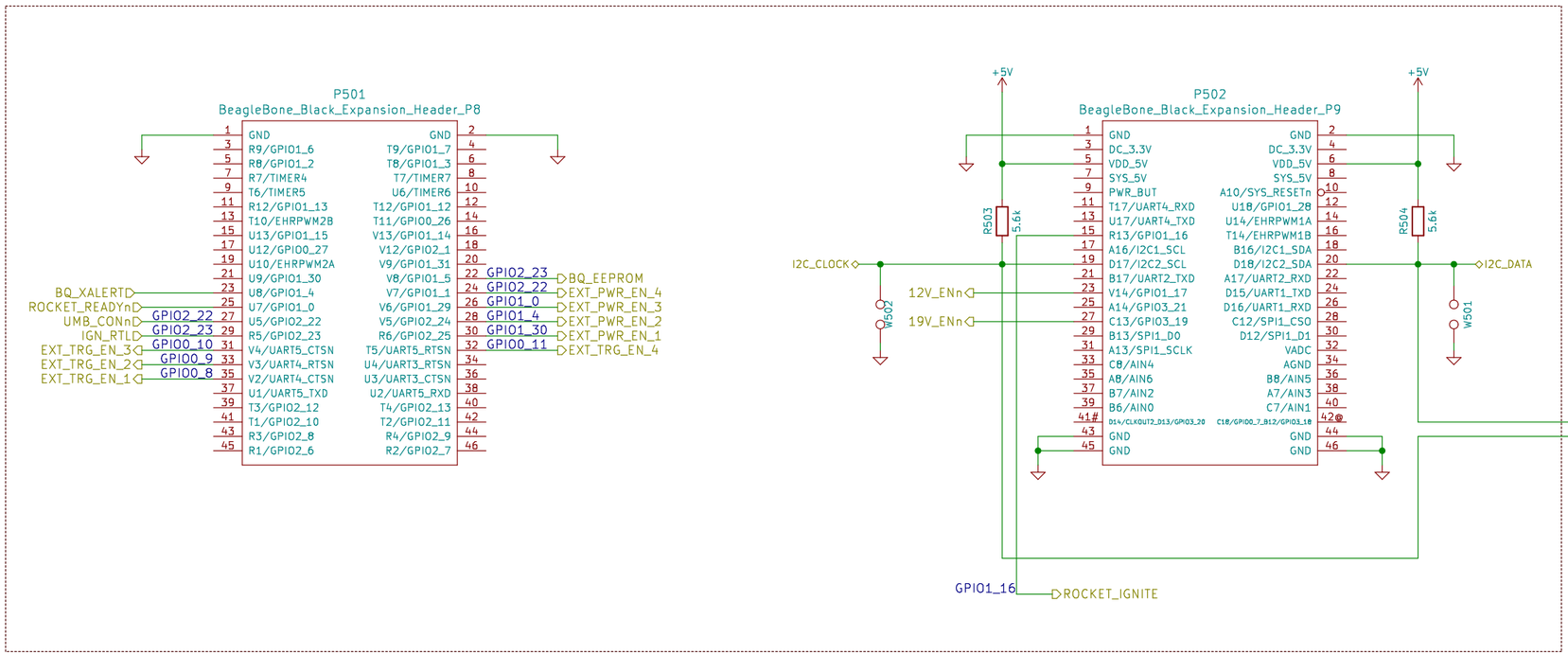

BeagleBone Expansion Headers

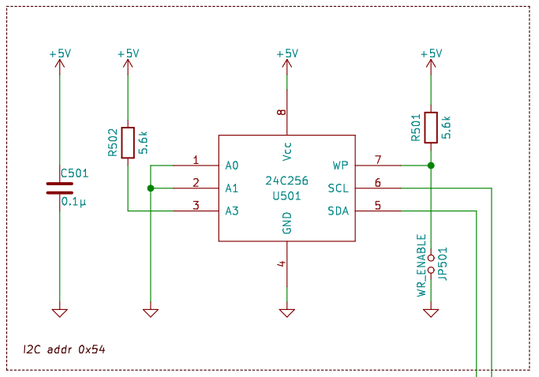

Cape EEPROM

I2C Devices

ADDR	Part	Type	Location
0x10	U203	BQ77PL900	B/PM
0x54	U501	EEPROM	BBB
0x90	U402	LTC2991	DC-DC
0x98	U203	LTC2990	Power In
0x9A	U301	LTC2990	B/PM

NOTES:
* Do NOT change ROCKET_IGNITE, pin default reset state is High-Z w/ pulldown resistor. Other pins can be configured in EEPROM at boot time.
* All I2C devices on LTC3 are slaves. The BBB is the only master so the LTC will not need arbitration.

Portland State Aerospace Society <http://psas.pdx.edu/>

Sheet: /BeagleBone Black Cape/
File: beaglebone_cape.sch

Title: LTC3 BeagleBone Black Cape Interface

Size: B	Date: 2016-05-07	**Rev: A**
KiCad E.D.A. kicad 4.1.0-alpha+201605071002+6776~44ubuntu16.04.1-product		Id: 5/8

Ignition battery pack disconnected until
flight computer has asserted ROCKET_READY
and 19 VDC rail (shore power) has been shut off.

ROCKET_READYn
+3.1V
+5V
R601 10k
U601B
CD74HC14
R603 62k
R604 100k
U601A
CD74HC14
R602 120
IC601
TLP3542
R605 10k
W602 0/5V
U602
SN65220DBV
SOT-23
TODO: "SOT-23"?
U603
741G08
Shore Power Check
+19V
R612 5.6k
R613 1.5k
C603 0.1µ
W603 0/5V
U601F
CD74HC14
R615 10k
W604 0/5V
W605 0/5V

Input Logic

D602 CDSU4148
R606 100
R607 500k
R609 NP
C601 10µ
C602 NP
W606 0/5V

Delay (5s)

+5V
D601 CDSU4148
K601
RELAY_1C
IGN_BATT_P
P604 BATT-IN
W601 14.8-16.8V
GND_IGN
U601D
CD74HC14
U601C
CD74HC14
Q601 PMV45EN
R608 10k
U601E
CD74HC14
R611 62k
IGN_RTL
+3.1V
R614 100k

Ignition Battery Relay

RJ45 J601
SHIELD
ROCKET_READY_5V
+19V
P603
UMBILICAL
ROCKET_ETH_1
ROCKET_ETH_2
ROCKET_ETH_3
ROCKET_ETH_4
UMB_CONN_FROM_RKT
UMB_CONN_TO_LTC
+5V
R616 5.1k
R621 5.1k
UMB_CONn
D609 3.3V
C604 1µ

TODO: conn. to umbilical conn. on front panel

Rocket Umbilical

Rocket-to-BeagleBone Ethernet

P606
S8B-PH-K
+5V
D604 CDSU4148
K602
RELAY_1C
Q602 PMV45EN
ROCKET_IGNITED
R622 10k
W607 0/3.3V
P605 43045-0200 MicroFit3 1x2 header
P605 43045-0200 MicroFit3 1x2 header
GND_IGN

Rocket Ignition Relay

P604 43025-0200 MicroFit3 1x2 recept.
M601 W28-XQ1A-0.25
SW601 SPST
JP601 Banana Jack, 1x2
P608 43025-0200 MicroFit3 1x2 recept.
P602 CONN_01X02 To Away Box

Breaker, Arming Switch,
Shorting Bar, & Ign. Jack
(front panel)

P609
PHR-8
Ign. Batt. Connected D603 GREEN R617 1.5k
Ready To Launch D605 GREEN R610 250
Batt. Relay Closed D606 YELLOW R618 1.5k
Ignition Assert D607 YELLOW R619 165
Ign. Relay Closed D608 RED R620 1.5k
Ignition HOT D610 RED R623 1.5k

BAKERCON Hazard Gauge

(super-bright LEDs, exterior panel)

+5V
VCC

VCC for
CD74HC14

+5V
C605 0.1µ
+5V
C606 0.1µ

Bypass Capacitors
(one per IC VCC)

Portland State Aerospace Society <http://psas.pdx.edu/>

Sheet: /Rocket Umbilical & Ignition Control/
File: rocket_interface.sch

Title: LTC3 Rocket Umbilical & Ignition Control

Size: B	Date: 2016-05-07	**Rev: A**
KiCad E.D.A. kicad 4.1.0-alpha+201605071002+677644ubuntu16.04.1-prod		Id: 6/8

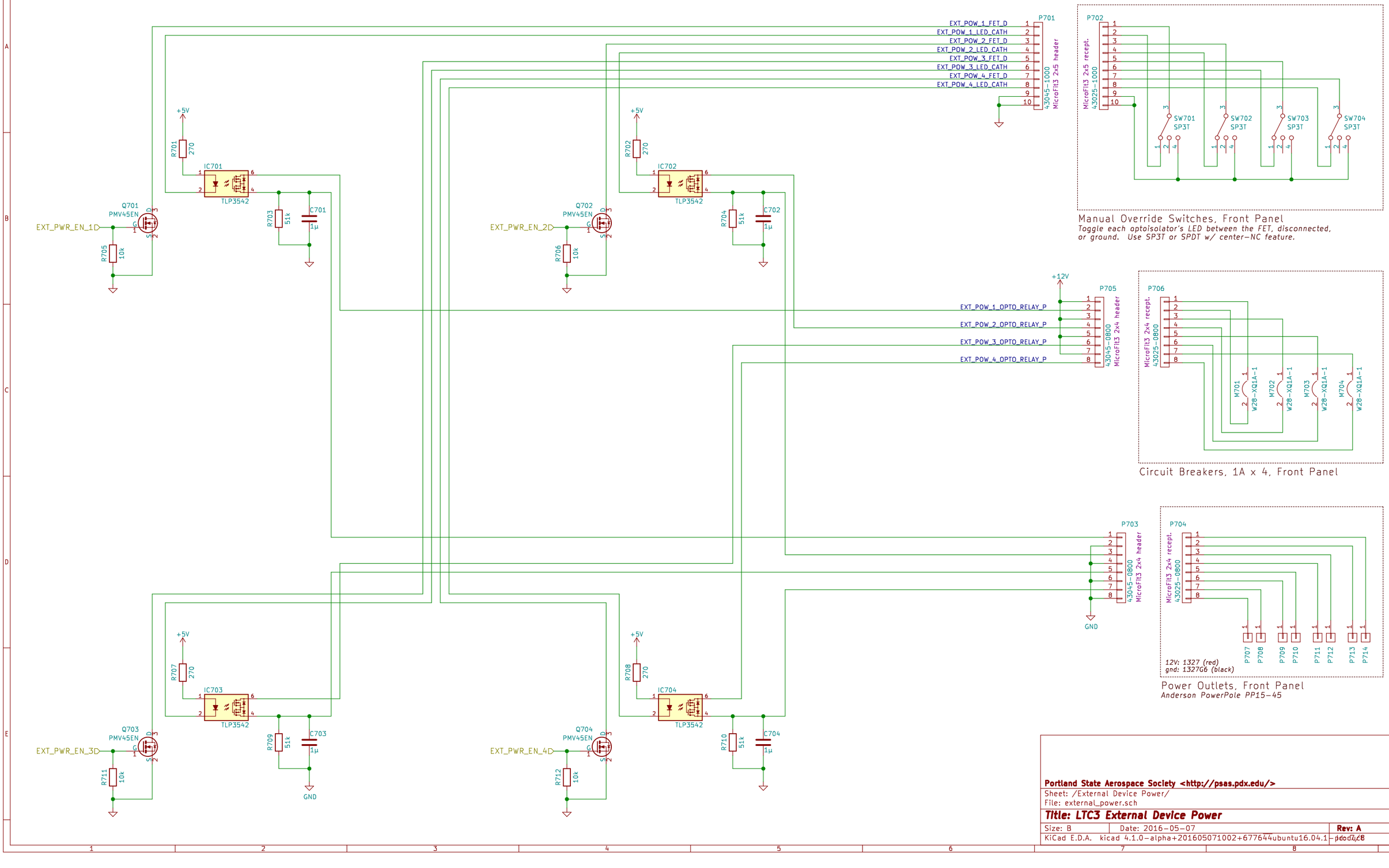
P701
EXT_POW_1_FET_D
EXT_POW_1_LED_CATH
EXT_POW_2_FET_D
EXT_POW_2_LED_CATH
EXT_POW_3_FET_D
EXT_POW_3_LED_CATH
EXT_POW_4_FET_D
EXT_POW_4_LED_CATH
43045-1000
MicroFit3 2x5 header
P702
MicroFit3 2x5 recept.
43025-1000
SW701 SP3T
SW702 SP3T
SW703 SP3T
SW704 SP3T
Manual Override Switches, Front Panel
Toggle each aptoisolator's LED between the FET, disconnected, or ground. Use SP3T or SPDT w/ center-NC feature.
+5V
R701 270
IC701
TLP3542
Q701 PMV45EN
EXT_PWR_EN_1
R705 10k
R703 51k
C701 1µ
R702 270
IC702
Q702 PMV45EN
EXT_PWR_EN_2
R706 10k
R704 51k
C702 1µ
+12V
P705
EXT_POW_1_OPTO_RELAY_P
EXT_POW_2_OPTO_RELAY_P
EXT_POW_3_OPTO_RELAY_P
EXT_POW_4_OPTO_RELAY_P
43045-0800
MicroFit3 2x4 header
P706
MicroFit3 2x4 recept.
43025-0800
M701 W28-XQ1A-1
M702 W28-XQ1A-1
M703 W28-XQ1A-1
M704 W28-XQ1A-1
Circuit Breakers, 1A x 4, Front Panel
P703
GND
P704
P707 P708 P709 P710 P711 P712 P713 P714
12V: 1327 (red)
gnd: 1327G6 (black)
Power Outlets, Front Panel
Anderson PowerPole PP15-45
IC703
Q703 PMV45EN
EXT_PWR_EN_3
R711 10k
R709 51k
C703 1µ
IC704
Q704 PMV45EN
EXT_PWR_EN_4
R712 10k
R710 51k
C704 1µ
Portland State Aerospace Society <http://psas.pdx.edu/>
Sheet: /External Device Power/
File: external_power.sch
Title: LTC3 External Device Power
Size: B
Date: 2016-05-07
Rev: A
KiCad E.D.A. kicad 4.1.0-alpha+201605071002+6776~44~ubuntu16.04.1-prod
Id: 1/1

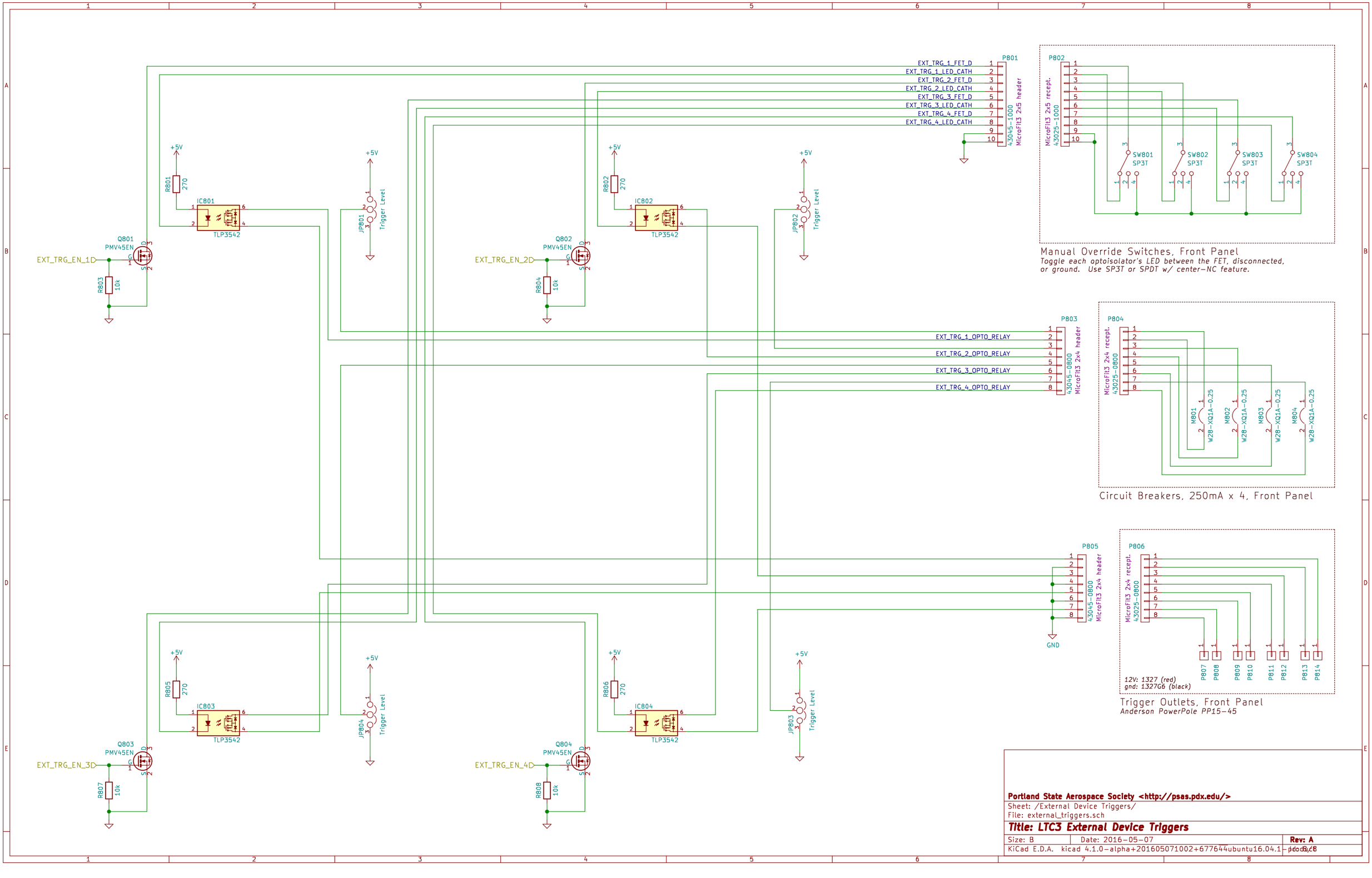
P801
EXT_TRG_1_FET_D
EXT_TRG_1_LED_CATH
EXT_TRG_2_FET_D
EXT_TRG_2_LED_CATH
EXT_TRG_3_FET_D
EXT_TRG_3_LED_CATH
EXT_TRG_4_FET_D
EXT_TRG_4_LED_CATH
43045-1000
MicroFit3 2x5 header
P802
MicroFit3 2x5 recept.
43025-1000
SW801 SP3T
SW802 SP3T
SW803 SP3T
SW804 SP3T
Manual Override Switches, Front Panel
Toggle each aptoisolator's LED between the FET, disconnected, or ground. Use SP3T or SPDT w/ center-NC feature.
+5V
R801 270
IC801
TLP3542
JP801
Trigger Level
Q801
PMV45EN
EXT_TRG_EN_1
R803 10k
R802 270
IC802
JP802
Q802
EXT_TRG_EN_2
R804 10k
P803
EXT_TRG_1_OPTO_RELAY
EXT_TRG_2_OPTO_RELAY
EXT_TRG_3_OPTO_RELAY
EXT_TRG_4_OPTO_RELAY
43045-0800
MicroFit3 2x4 header
P804
MicroFit3 2x4 recept.
43025-0800
M801 W28-XQ1A-0.25
M802 W28-XQ1A-0.25
M803 W28-XQ1A-0.25
M804 W28-XQ1A-0.25
Circuit Breakers, 250mA x 4, Front Panel
P805
GND
P806
P807
P808
P809
P810
P811
P812
P813
P814
12V: 1327 (red)
gnd: 1327G6 (black)
Trigger Outlets, Front Panel
Anderson PowerPole PP15-45
R805 270
IC803
JP804
Q803
EXT_TRG_EN_3
R807 10k
R806 270
IC804
JP803
Q804
EXT_TRG_EN_4
R808 10k
Portland State Aerospace Society <http://psas.pdx.edu/>
Sheet: /External Device Triggers/
File: external_triggers.sch
Title: LTC3 External Device Triggers
Size: B
Date: 2016-05-07
Rev: A
KiCad E.D.A. kicad 4.1.0-alpha+201605071002+6776~44~ubuntu16.04.1-prod
Id: 1/1