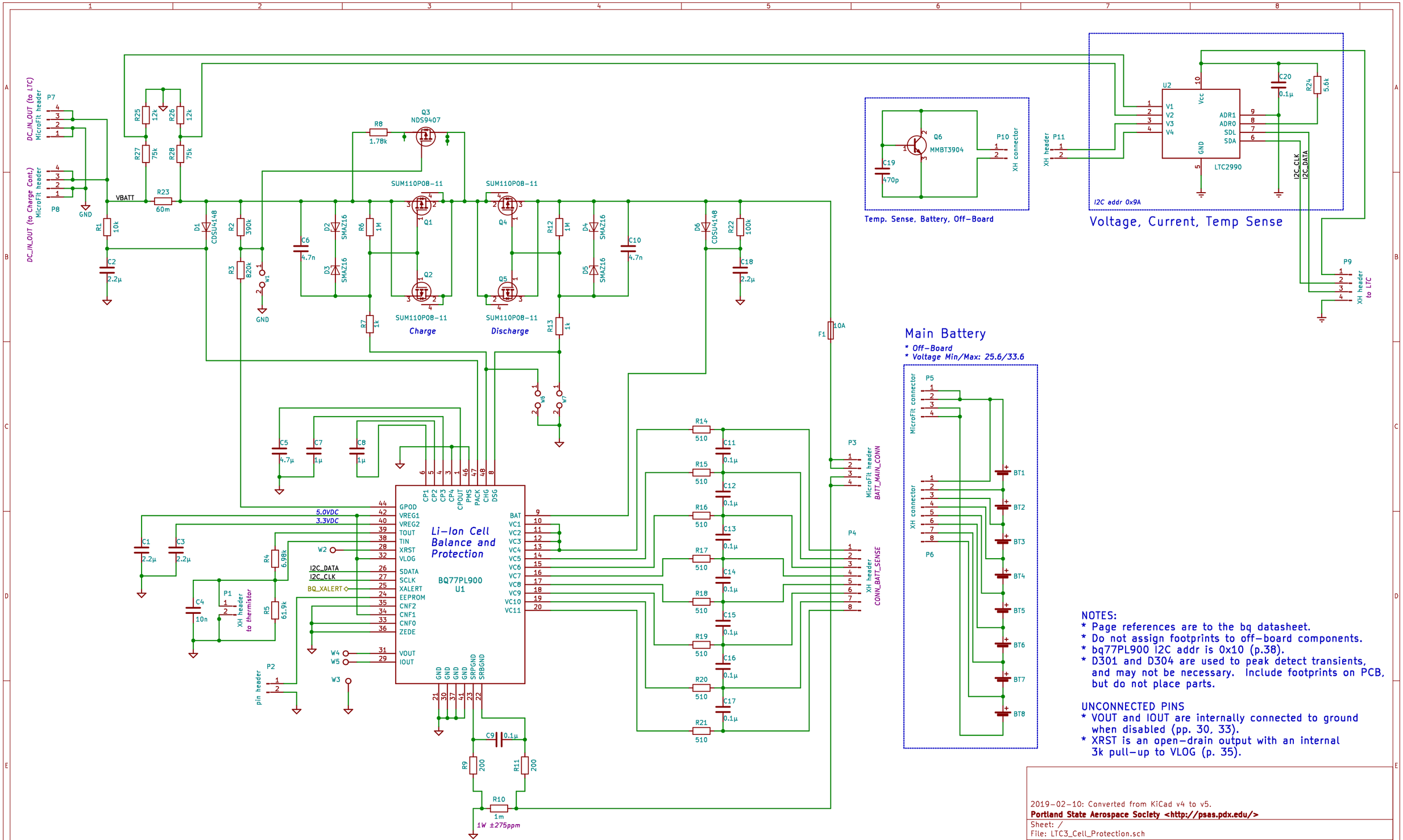

NOTES:
* Page references are to the bq datasheet.
* Do not assign footprints to off-board components.
* bq77PL900 I2C addr is 0x10 (p.38).
* D301 and D304 are used to peak detect transients, and may not be necessary. Include footprints on PCB, but do not place parts.

UNCONNECTED PINS
* VOUT and IOUT are internally connected to ground when disabled (pp. 30, 33).
* XRST is an open-drain output with an internal 3k pull-up to VLOG (p. 35).

2019-02-10: Converted from KiCad v4 to v5.
Portland State Aerospace Society <http://psas.pdx.edu/>
Sheet: /
File: LTC3_Cell_Protection.sch

Title: Cell Protection

Size: B	Date: 2016-09-13	Rev: A
KiCad E.D.A. kicad 5.0.2+dfsg1-1		Id: 1/1