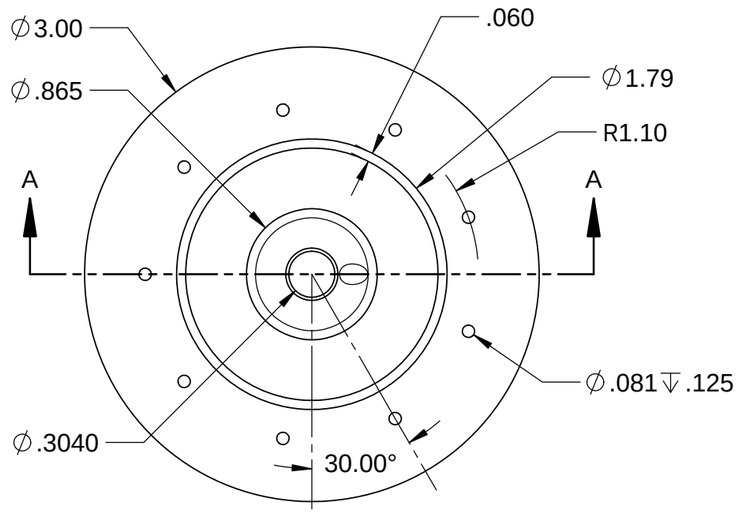

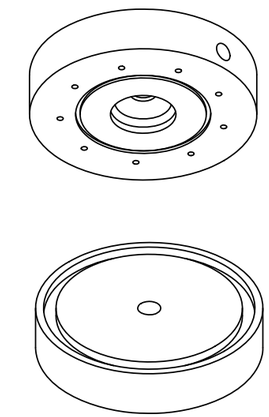

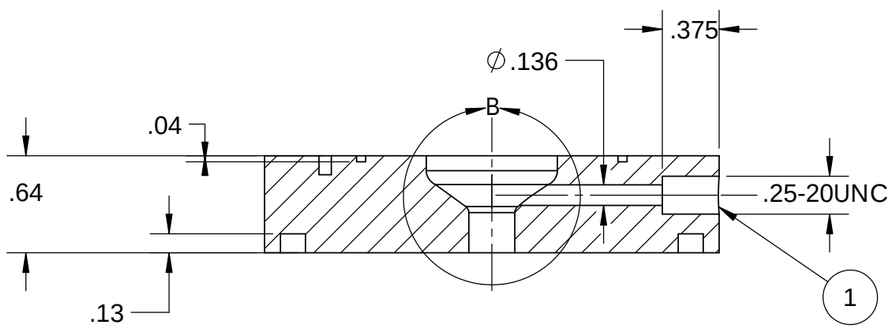

SECTION A-A
SCALE 1 : 1

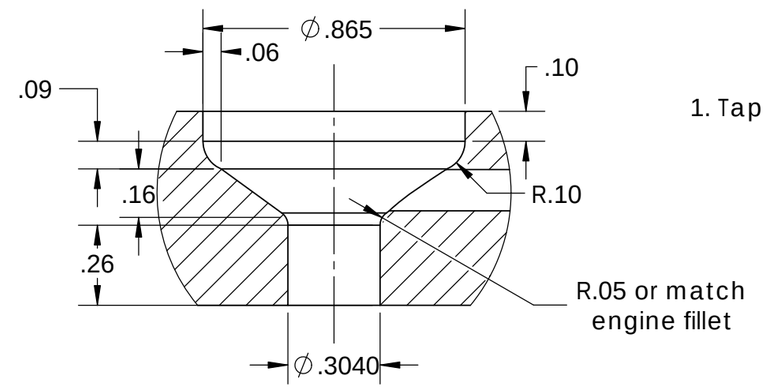

DETAIL B
SCALE 2 : 1

1. Tap and thread for 1/4" NPT

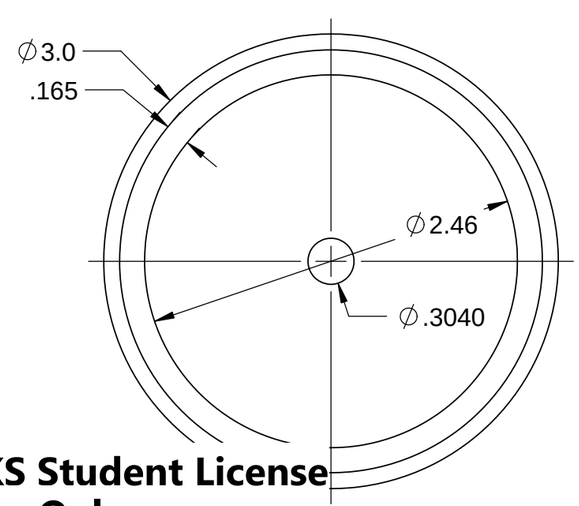

		UNLESS OTHERWISE SPECIFIED:		NAME	DATE	
		DIMENSIONS ARE IN INCHES TOLERANCES: FRACTIONAL± ANGULAR: MACH± BEND ± TWO PLACE DECIMAL ± THREE PLACE DECIMAL ±	DRAWN			TITLE:
			CHECKED			
			ENG APPR.			
			MFG APPR.			
		INTERPRET GEOMETRIC TOLERANCING PER:	Q.A.			
		MATERIAL **316 SS Pintle, 6061 Aluminum Plate & Annulus**	COMMENTS:			SIZE B / DWG. NO. Drawing_Cold_Test_Annulus_V0 / REV
NEXT ASSY	USED ON	FINISH				
APPLICATION		DO NOT SCALE DRAWING				SCALE: 1:2 / WEIGHT: / SHEET 1 OF 1

SOLIDWORKS Student License
Academic Use Only