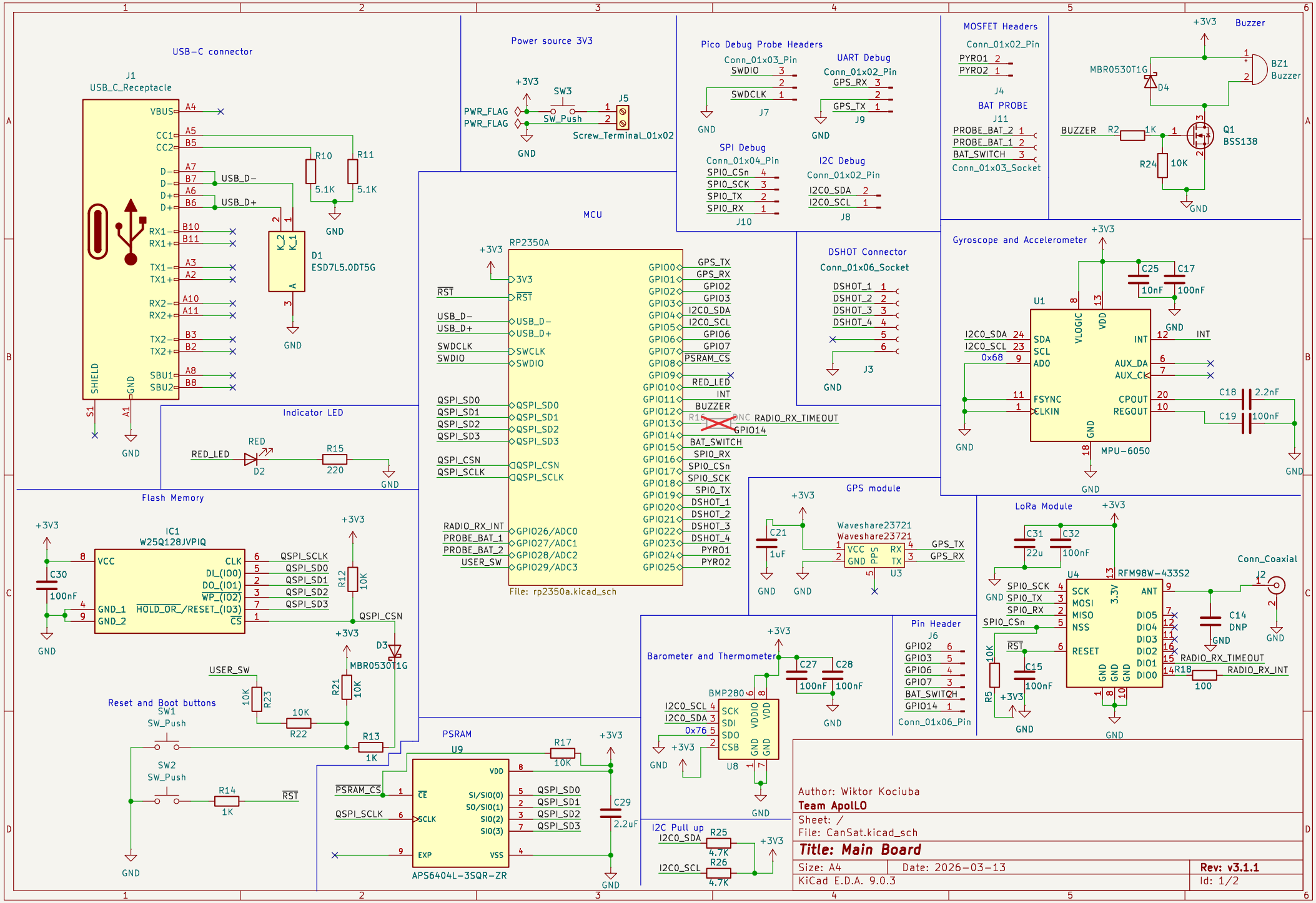
USB-C connector
J1
USB_C_Receptacle
VBUS
CC1
CC2
D-
D-
D+
D+
RX1-
RX1+
TX1-
TX1+
RX2-
RX2+
TX2-
TX2+
SBU1
SBU2
SHIELD
GND
USB_D-
USB_D+
R10
5.1K
R11
5.1K
D1
ESD7L5.0DT5G
Power source 3V3
+3V3
SW3
SW_Push
J5
Screw_Terminal_01x02
PWR_FLAG
PWR_FLAG
Pico Debug Probe Headers
Conn_01x03_Pin
SWDIO
SWDCLK
J7
UART Debug
Conn_01x02_Pin
GPS_RX
GPS_TX
J9
SPI Debug
Conn_01x04_Pin
SPI0_CSn
SPI0_SCK
SPI0_TX
SPI0_RX
J10
I2C Debug
Conn_01x02_Pin
I2C0_SDA
I2C0_SCL
J8
MOSFET Headers
Conn_01x02_Pin
PYRO1
PYRO2
J4
BAT PROBE
J11
PROBE_BAT_2
PROBE_BAT_1
BAT_SWITCH
Conn_01x03_Socket
Buzzer
MBR0530T1G
D4
BZ1
Buzzer
BUZZER
R2
1K
Q1
BSS138
R24
10K
MCU
RP2350A
3V3
RST
USB_D-
USB_D+
SWCLK
SWDIO
QSPI_SD0
QSPI_SD1
QSPI_SD2
QSPI_SD3
QSPI_CSN
QSPI_SCLK
RADIO_RX_INT
PROBE_BAT_1
PROBE_BAT_2
USER_SW
GPIO26/ADC0
GPIO27/ADC1
GPIO28/ADC2
GPIO29/ADC3
GPIO0
GPIO1
GPIO2
GPIO3
GPIO4
GPIO5
GPIO6
GPIO7
GPIO8
GPIO9
GPIO10
GPIO11
GPIO12
GPIO13
GPIO14
GPIO15
GPIO16
GPIO17
GPIO18
GPIO19
GPIO20
GPIO21
GPIO22
GPIO23
GPIO24
GPIO25
GPS_TX
GPS_RX
GPIO2
GPIO3
I2C0_SDA
I2C0_SCL
GPIO6
GPIO7
PSRAM_CS
RED_LED
INT
BUZZER
R16
NC
RADIO_RX_TIMEOUT
GPIO14
BAT_SWITCH
SPI0_RX
SPI0_CSn
SPI0_SCK
SPI0_TX
DSHOT_1
DSHOT_2
DSHOT_3
DSHOT_4
PYRO1
PYRO2
File: rp2350a.kicad_sch
DSHOT Connector
Conn_01x06_Socket
DSHOT_1
DSHOT_2
DSHOT_3
DSHOT_4
J3
Gyroscope and Accelerometer
U1
C25
10nF
C17
100nF
I2C0_SDA
I2C0_SCL
0x68
SDA
SCL
ADO
VLOGIC
VDD
INT
AUX_DA
AUX_CL
FSYNC
CLKIN
CPOUT
REGOUT
C18
2.2nF
C19
100nF
MPU-6050
Indicator LED
RED_LED
RED
D2
R15
220
Flash Memory
IC1
W25Q128JVPIQ
VCC
CLK
DI_(IO0)
DO_(IO1)
WP_(IO2)
GND_1
GND_2
HOLD_OR_/RESET_(IO3)
CS
C30
100nF
QSPI_SCLK
QSPI_SD0
QSPI_SD1
QSPI_SD2
QSPI_SD3
QSPI_CSN
R12
10K
D3
MBR053011G
R21
10K
USER_SW
R23
10K
R22
10K
R13
1K
Reset and Boot buttons
SW1
SW_Push
SW2
SW_Push
R14
1K
RST
GPS module
C21
1uF
Waveshare23721
VCC
GND
PPS
RX
TX
U3
GPS_TX
GPS_RX
LoRa Module
C31
22u
C32
100nF
U4
RFM98W-433S2
SCK
MOSI
MISO
NSS
RESET
3.3V
ANT
DIO5
DIO4
DIO3
DIO2
DIO1
DIO0
SPI0_SCK
SPI0_TX
SPI0_RX
SPI0_CSn
RST
C15
100nF
R5
10K
C14
DNP
Conn_Coaxial
J2
RADIO_RX_TIMEOUT
R18
100
RADIO_RX_INT
Barometer and Thermometer
BMP280
SCK
SDI
SDO
CSB
VDDIO
VDD
GND
I2C0_SCL
I2C0_SDA
0x76
U8
C27
100nF
C28
100nF
Pin Header
J6
GPIO2
GPIO3
GPIO6
GPIO7
BAT_SWITCH
GPIO14
Conn_01x06_Pin
PSRAM
U9
VDD
CE
SCLK
EXP
SI/SIO(0)
SO/SIO(1)
SIO(2)
SIO(3)
VSS
PSRAM_CS
QSPI_SCLK
QSPI_SD0
QSPI_SD1
QSPI_SD2
QSPI_SD3
R17
10K
C29
2.2uF
APS6404L-3SQR-ZR
I2C Pull up
I2C0_SDA
I2C0_SCL
R25
4.7K
R26
4.7K
Author: Wiktor Kociuba
Team ApolLO
Sheet: /
File: CanSat.kicad_sch
Title: Main Board
Size: A4
Date: 2026-03-13
Rev: v3.1.1
KiCad E.D.A. 9.0.3
Id: 1/2

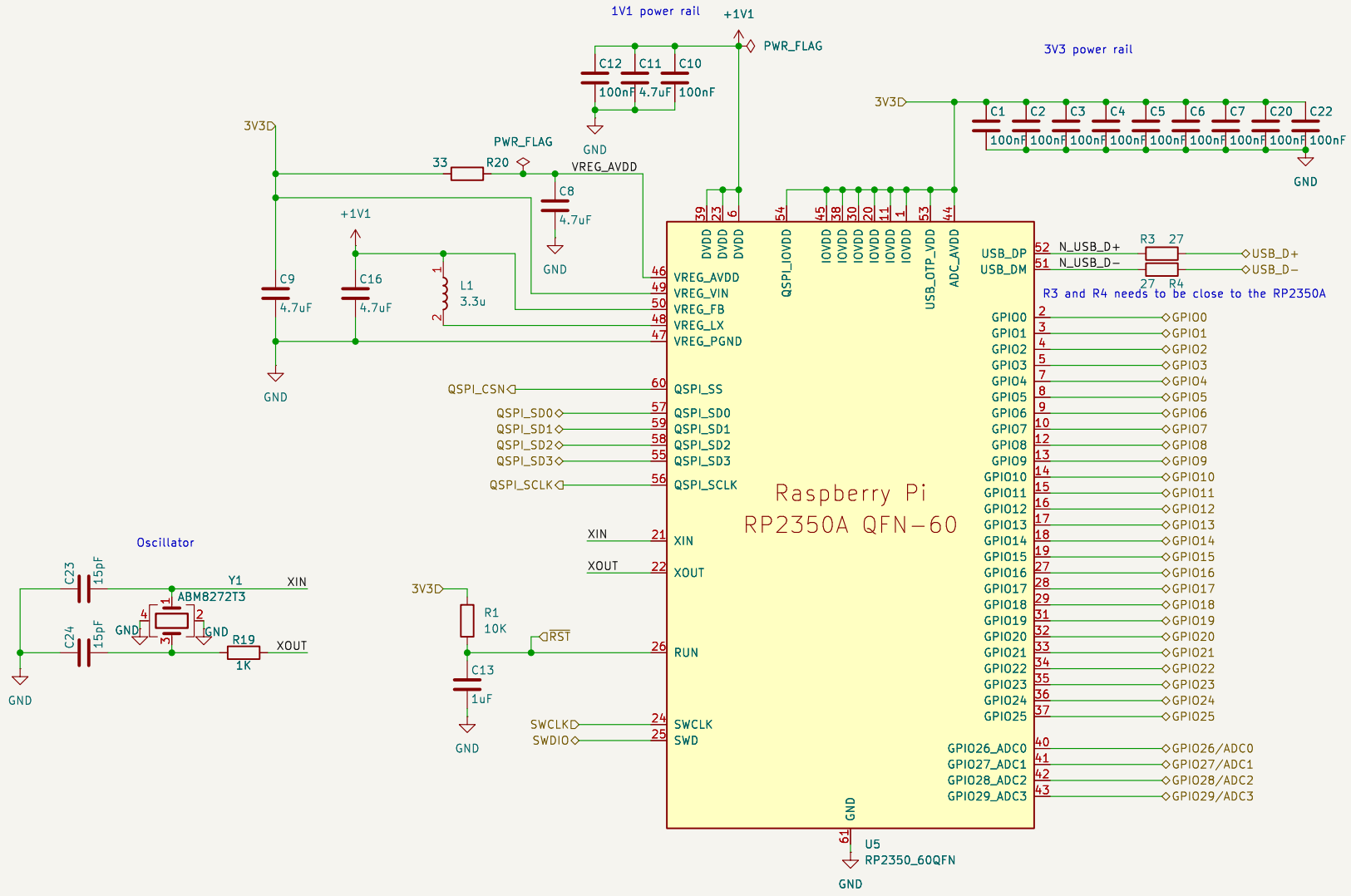


Author: Wiktor Kociuba
**Team ApolLO**

Sheet: /RP2350A/
File: rp2350a.kicad_sch

**Title: MCU – RP2350A**

| | | |
|---|---|---|
| Size: A4 | Date: 2026-03-11 | **Rev: v2.0.0** |
| KiCad E.D.A. 9.0.3 | | Id: 2/2 |