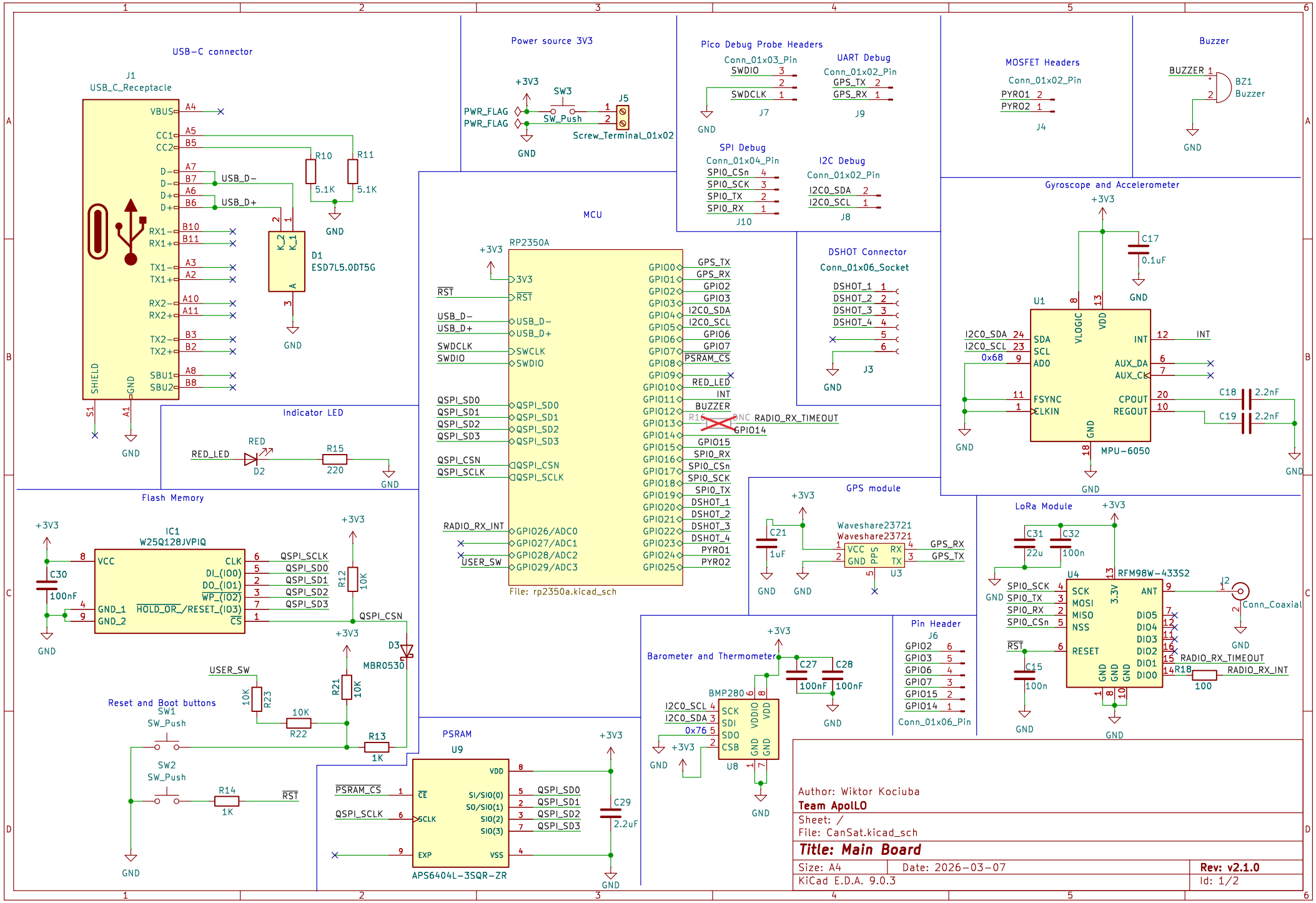
USB-C connector
J1
USB_C_Receptacle
VBUS A4
CC1 A5
CC2 B5
D- A7
D- B7
D+ A6
D+ B6
USB_D-
USB_D+
RX1- B10
RX1+ B11
TX1- A3
TX1+ A2
RX2- A10
RX2+ A11
TX2- B3
TX2+ B2
SBU1 A8
SBU2 B8
SHIELD
GND
S1
A1
R10
5.1K
R11
5.1K
D1
ESD7L5.0DT5G
K_2
K_1
A
Power source 3V3
+3V3
SW3
SW_Push
J5
Screw_Terminal_01x02
PWR_FLAG
PWR_FLAG
GND
Pico Debug Probe Headers
Conn_01x03_Pin
SWDIO 3
2
SWDCLK 1
J7
UART Debug
Conn_01x02_Pin
GPS_TX 2
GPS_RX 1
J9
SPI Debug
Conn_01x04_Pin
SPI0_CSn 4
SPI0_SCK 3
SPI0_TX 2
SPI0_RX 1
J10
I2C Debug
Conn_01x02_Pin
I2C0_SDA 2
I2C0_SCL 1
J8
MOSFET Headers
Conn_01x02_Pin
PYRO1 2
PYRO2 1
J4
Buzzer
BUZZER 1
BZ1
Buzzer
MCU
RP2350A
+3V3
3V3
RST
USB_D-
USB_D+
SWCLK
SWDIO
QSPI_SD0
QSPI_SD1
QSPI_SD2
QSPI_SD3
QSPI_CSN
QSPI_SCLK
RADIO_RX_INT
USER_SW
GPIO26/ADC0
GPIO27/ADC1
GPIO28/ADC2
GPIO29/ADC3
GPIO0 GPS_TX
GPIO1 GPS_RX
GPIO2
GPIO3
GPIO4 I2C0_SDA
GPIO5 I2C0_SCL
GPIO6
GPIO7
GPIO8 PSRAM_CS
GPIO9
GPIO10 RED_LED
GPIO11 INT
GPIO12 BUZZER
GPIO13 R16 NC RADIO_RX_TIMEOUT
GPIO14
GPIO15
GPIO16 SPI0_RX
GPIO17 SPI0_CSn
GPIO18 SPI0_SCK
GPIO19 SPI0_TX
GPIO20 DSHOT_1
GPIO21 DSHOT_2
GPIO22 DSHOT_3
GPIO23 DSHOT_4
GPIO24 PYRO1
GPIO25 PYRO2
File: rp2350a.kicad_sch
DSHOT Connector
Conn_01x06_Socket
DSHOT_1 1
DSHOT_2 2
DSHOT_3 3
DSHOT_4 4
5
6
J3
Gyroscope and Accelerometer
+3V3
C17
0.1uF
U1
VLOGIC
VDD
I2C0_SDA 24 SDA
I2C0_SCL 23 SCL
0x68 9 ADO
INT 12 INT
AUX_DA 6
AUX_CL 7
11 FSYNC
1 CLKIN
CPOUT 20 C18 2.2nF
REGOUT 10 C19 2.2nF
GND
MPU-6050
Indicator LED
RED_LED
RED
D2
R15
220
Flash Memory
+3V3
IC1
W25Q128JVPIQ
VCC 8
C30
100nF
GND_1 4
GND_2 9
CLK 6 QSPI_SCLK
DI_(IO0) 5 QSPI_SD0
DO_(IO1) 2 QSPI_SD1
WP_(IO2) 3 QSPI_SD2
HOLD_OR_/RESET_(IO3) 7 QSPI_SD3
CS 1 QSPI_CSN
R12
10K
D3
MBR0530
USER_SW
R23
10K
R21
10K
R22
10K
R13
1K
Reset and Boot buttons
SW1
SW_Push
SW2
SW_Push
R14
1K
RST
GPS module
+3V3
C21
1uF
Waveshare23721
VCC 1
GND 2
PPS 5
RX 4 GPS_RX
TX 3 GPS_TX
U3
LoRa Module
+3V3
C31
22u
C32
100n
U4
RFM98W-433S2
SPI0_SCK 4 SCK
SPI0_TX 3 MOSI
SPI0_RX 2 MISO
SPI0_CSn 5 NSS
RST 6 RESET
3.3V 13
ANT 9
DIO5 7
DIO4 12
DIO3 11
DIO2 16
DIO1 15 RADIO_RX_TIMEOUT
DIO0 14 R18 100 RADIO_RX_INT
J2
Conn_Coaxial
C15
100n
Barometer and Thermometer
+3V3
C27
100nF
C28
100nF
BMP280
I2C0_SCL 4 SCK
I2C0_SDA 3 SDI
0x76 5 SDO
CSB 2
VDDIO 6
VDD 8
GND 1
GND 7
U8
Pin Header
J6
GPIO2 6
GPIO3 5
GPIO6 4
GPIO7 3
GPIO15 2
GPIO14 1
Conn_01x06_Pin
PSRAM
U9
PSRAM_CS 1 CE
QSPI_SCLK 6 SCLK
9 EXP
VDD 8
SI/SIO(0) 5 QSPI_SD0
SO/SIO(1) 2 QSPI_SD1
SIO(2) 3 QSPI_SD2
SIO(3) 7 QSPI_SD3
VSS 4
APS6404L-3SQR-ZR
C29
2.2uF
Author: Wiktor Kociuba
Team ApolLO
Sheet: /
File: CanSat.kicad_sch
Title: Main Board
Size: A4
Date: 2026-03-07
Rev: v2.1.0
KiCad E.D.A. 9.0.3
Id: 1/2

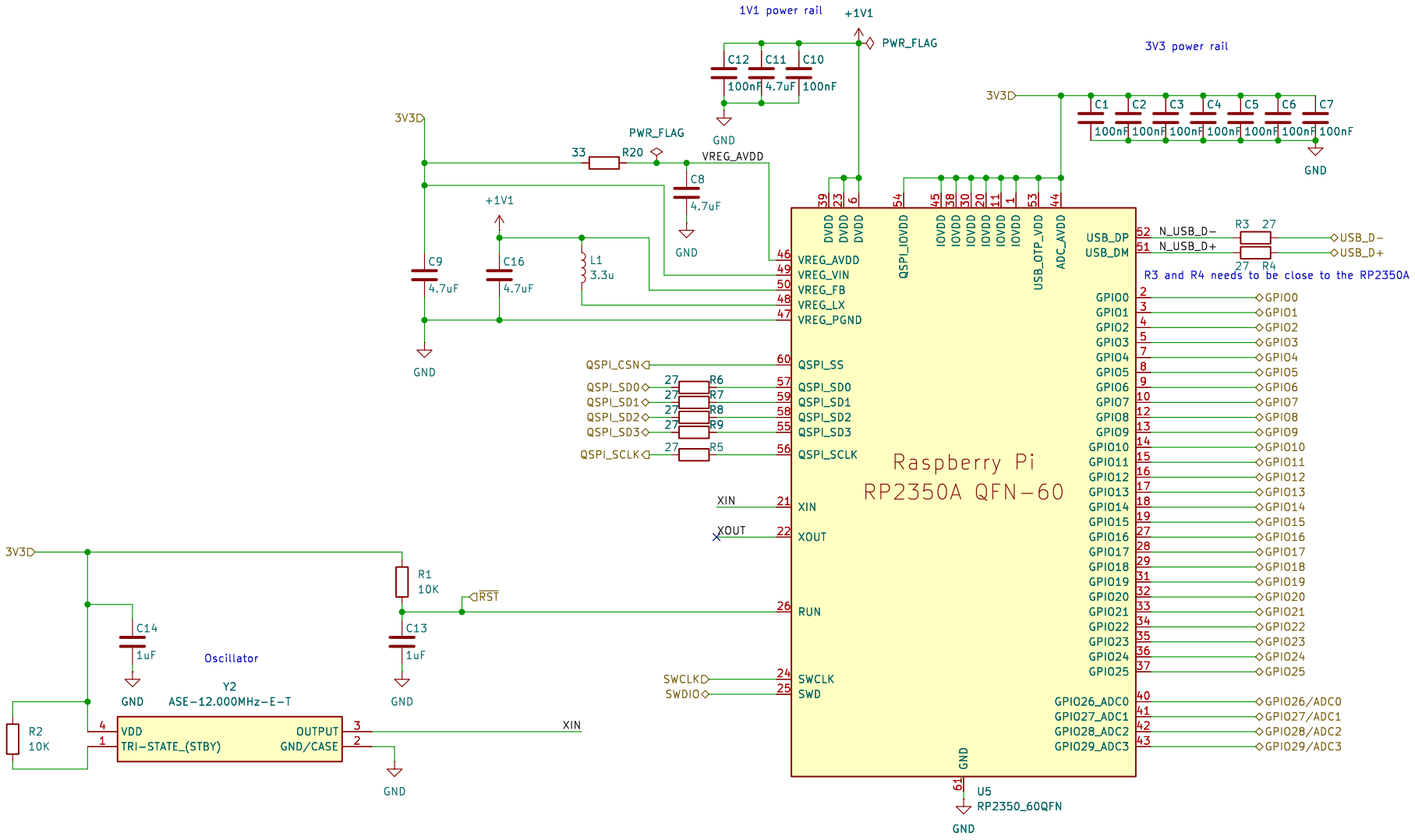

Author: Wiktor Kociuba
Team ApolLO

Sheet: /RP2350A/
File: rp2350a.kicad_sch

Title: MCU – RP2350A

Size: A4	Date: 2025-10-16	**Rev: 1.0.2**
KiCad E.D.A. 9.0.3		Id: 2/2