CSE 5004-Graph Theory and Algorithms

Exercise – 7

1. At a regional airport there is a facility that is used for minor routine maintenance of airplanes. This facility has four locations available for this purpose and so four airplanes can conceivably be serviced at the same time. This facility is open on certain days from 7 am to 7 pm. Performing this maintenance requires $2\frac{1}{2}$ hours per airplane; however, three hours are scheduled for each plane. A certain location may be scheduled for two different planes if the exit time for one plane is the same as the entrance time for the other. On a particular day, twelves airplanes, denoted by $P_1, P_2, \ldots, P_{12}$, are scheduled for maintenance during the indicated time periods:

P_1 : 11 am - 2 pm;	P_2 : 3 pm - 6 pm;	P_3 : 8 am - 11 am;
P_4 : 1 :30 pm - 4 :30 pm;	P_5 : 1 pm - 4 pm;	P_6 : 2 pm - 5 pm;
P_7 : 9 :30 am - 12 :30 pm;	P_8 : 7 am - 10 am;	P_9 : noon - 3 pm;
P_{10} : 4 pm - 7 pm;	P_{11} : 10 am - 1 pm;	P_{12} : 9 am - noon.

Can a maintenance schedule be constructed for all twelve airplanes?

Yes

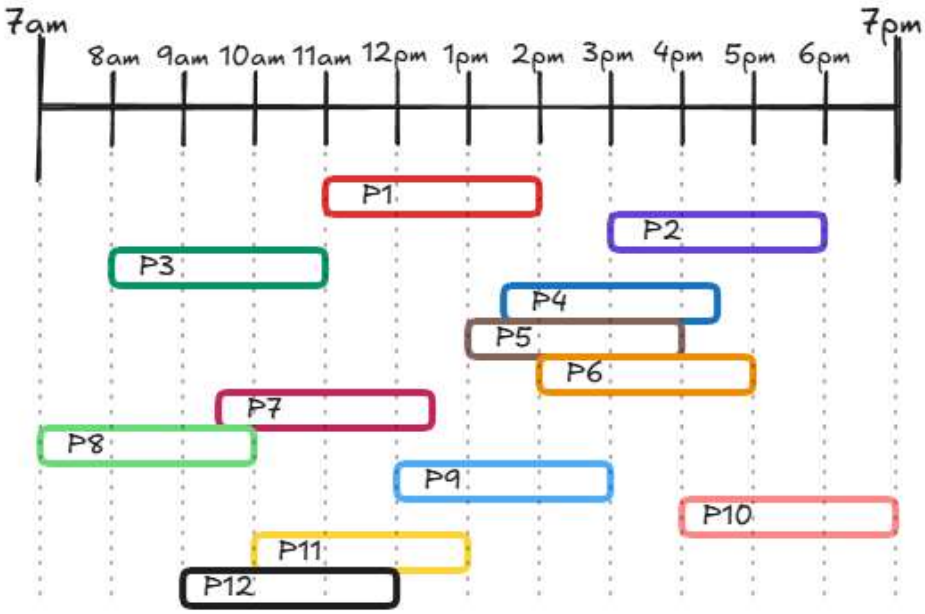

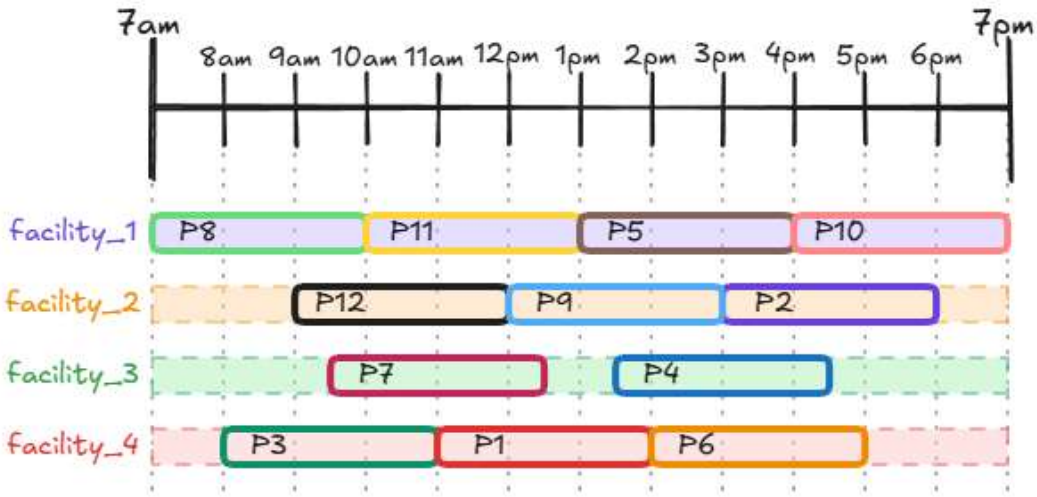

CSE 5004-Graph Theory and Algorithms

Exercise – 7

2. Six math students will take seven summer math classes, denoted A–G. The students' schedules are listed below:

Student	Classes
Al	A, D, G
Bob	B, E
Carl	A, C, G
Dave	C, E
Edna	E, F
Frank	B, D, F

How few time slots we can schedule the classes in, and how to construct such a schedule?
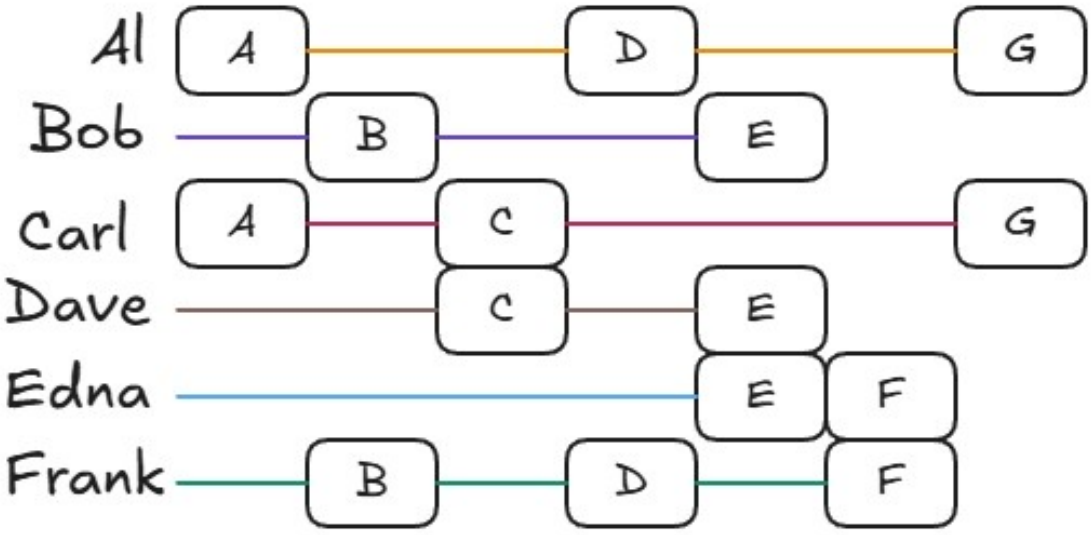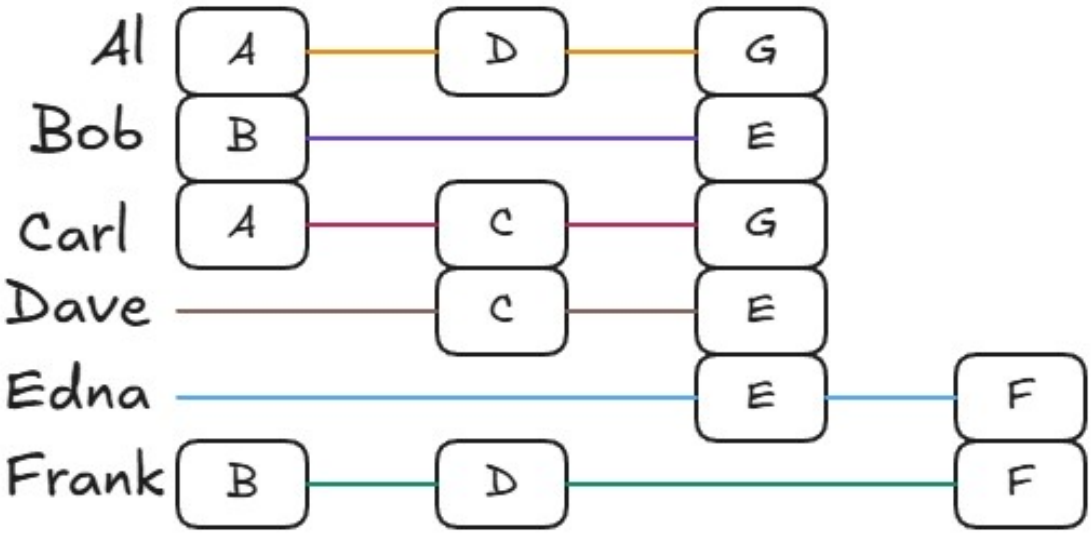
4 Time Slots