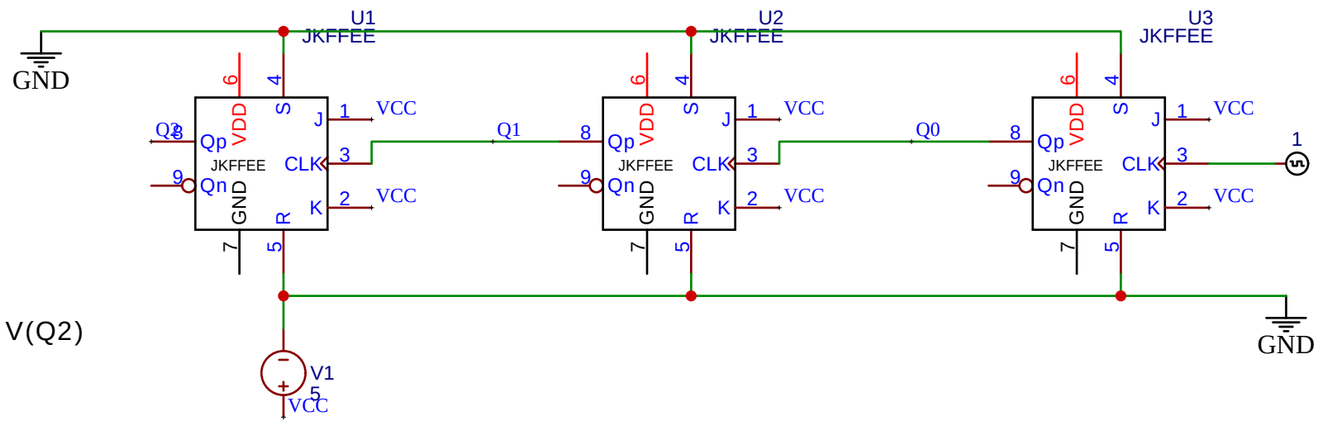

.tran 10

.probe V(Q0) V(Q1) V(Q2)

TITLE: Sheet_1		REV: 1.0
EasyEDA	Company: Your Company	Sheet: 1/1
	Date: 2021-09-30 Drawn By: Davi Pasquini	