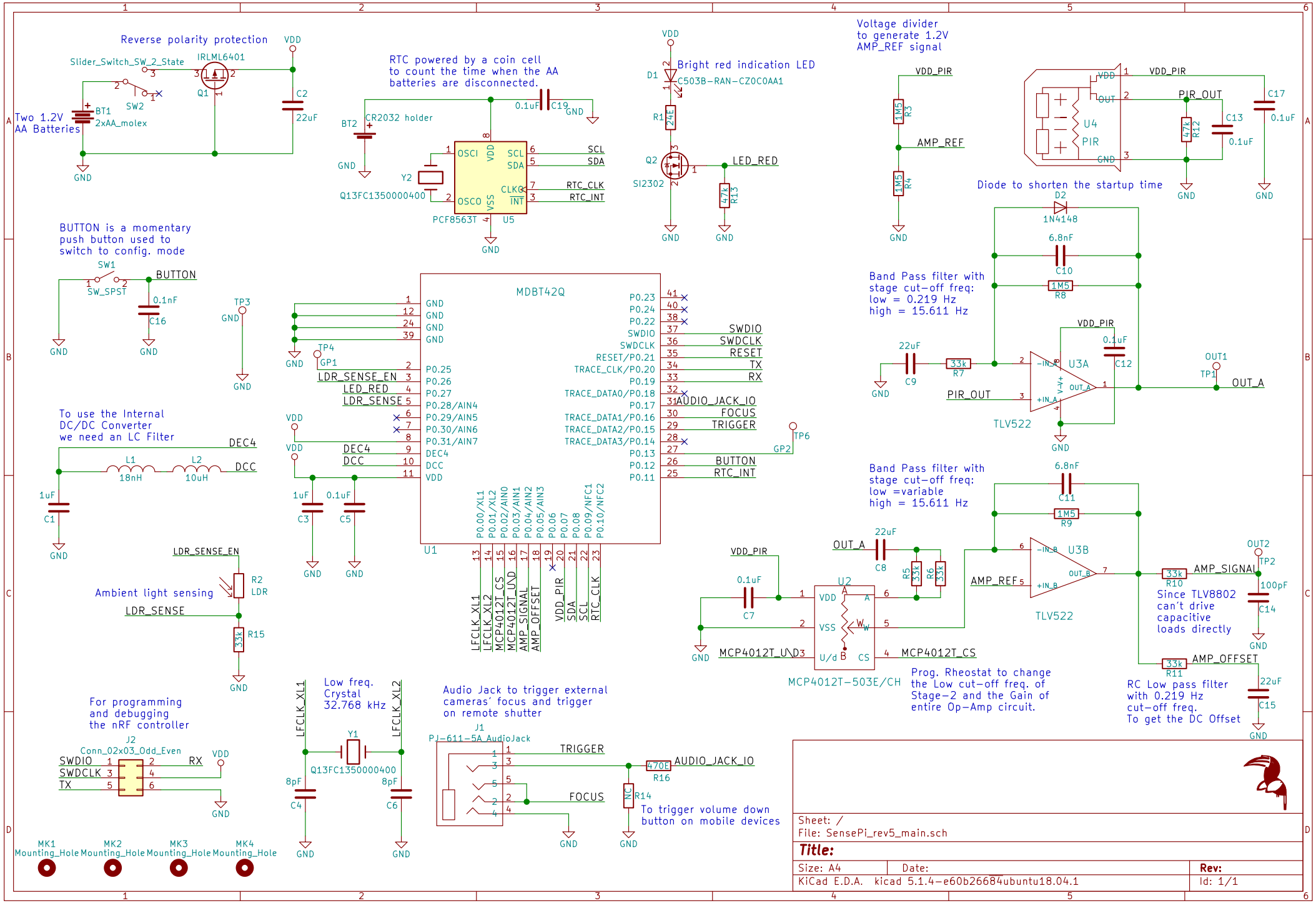
Reverse polarity protection
Slider_Switch_SW_2_State
IRLML6401
Q1
SW2
BT1
2xAA_molex
Two 1.2V AA Batteries
C2
22uF
VDD
GND
RTC powered by a coin cell to count the time when the AA batteries are disconnected.
BT2
CR2032 holder
C19
0.1uF
Y2
Q13FC1350000400
PCF8563T
U5
OSCI
OSCO
VDD
VSS
SCL
SDA
CLKO
INT
RTC_CLK
RTC_INT
Bright red indication LED
D1
C503B-RAN-CZ0C0AA1
R1
24E
Q2
SI2302
LED_RED
R13
47k
Voltage divider to generate 1.2V AMP_REF signal
VDD_PIR
R3
1M5
AMP_REF
R4
U4
PIR
OUT
PIR_OUT
C17
0.1uF
R12
47k
C13
0.1uF
Diode to shorten the startup time
D2
1N4148
BUTTON is a momentary push button used to switch to config. mode
SW1
SW_SPST
BUTTON
C16
0.1nF
TP3
MDBT42Q
U1
GND
TP4
GP1
LDR_SENSE_EN
LED_RED
LDR_SENSE
DEC4
DCC
P0.25
P0.26
P0.27
P0.28/AIN4
P0.29/AIN5
P0.30/AIN6
P0.31/AIN7
P0.23
P0.24
P0.22
SWDIO
SWDCLK
RESET/P0.21
TRACE_CLK/P0.20
P0.19
TRACE_DATA0/P0.18
P0.17
TRACE_DATA1/P0.16
TRACE_DATA2/P0.15
TRACE_DATA3/P0.14
P0.13
P0.12
P0.11
TX
RX
AUDIO_JACK_IO
FOCUS
TRIGGER
BUTTON
RTC_INT
TP6
GP2
P0.00/XL1
P0.01/XL2
P0.02/AIN0
P0.03/AIN1
P0.04/AIN2
P0.05/AIN3
P0.06
P0.07
P0.08
P0.09/NFC1
P0.10/NFC2
LFCLK_XL1
LFCLK_XL2
MCP4012T_CS
MCP4012T_U\D
AMP_SIGNAL
AMP_OFFSET
VDD_PIR
SDA
SCL
RTC_CLK
Band Pass filter with stage cut-off freq:
low = 0.219 Hz
high = 15.611 Hz
C9
22uF
R7
33k
C10
6.8nF
R8
1M5
U3A
TLV522
C12
0.1uF
OUT1
TP1
OUT_A
To use the Internal DC/DC Converter we need an LC Filter
L1
18nH
L2
10uH
C1
1uF
C3
1uF
C5
0.1uF
Band Pass filter with stage cut-off freq:
low =variable
high = 15.611 Hz
C11
6.8nF
R9
1M5
U3B
TLV522
OUT2
TP2
AMP_SIGNAL
R10
33k
C14
100pF
Since TLV8802 can't drive capacitive loads directly
AMP_OFFSET
R11
33k
C15
22uF
RC Low pass filter with 0.219 Hz cut-off freq.
To get the DC Offset
Ambient light sensing
R2
LDR
R15
33k
U2
MCP4012T-503E/CH
C7
0.1uF
C8
22uF
R5
33k
R6
33k
Prog. Rheostat to change the Low cut-off freq. of Stage-2 and the Gain of entire Op-Amp circuit.
For programming and debugging the nRF controller
J2
Conn_02x03_Odd_Even
SWDIO
SWDCLK
TX
RX
Low freq. Crystal 32.768 kHz
Y1
Q13FC1350000400
C4
8pF
C6
8pF
Audio Jack to trigger external cameras' focus and trigger on remote shutter
J1
PJ-611-5A_AudioJack
TRIGGER
FOCUS
AUDIO_JACK_IO
R16
470E
R14
NC
To trigger volume down button on mobile devices
MK1
Mounting_Hole
MK2
Mounting_Hole
MK3
Mounting_Hole
MK4
Mounting_Hole
Sheet: /
File: SensePi_rev5_main.sch
Title:
Size: A4
Date:
Rev:
KiCad E.D.A. kicad 5.1.4-e60b26684ubuntu18.04.1
Id: 1/1