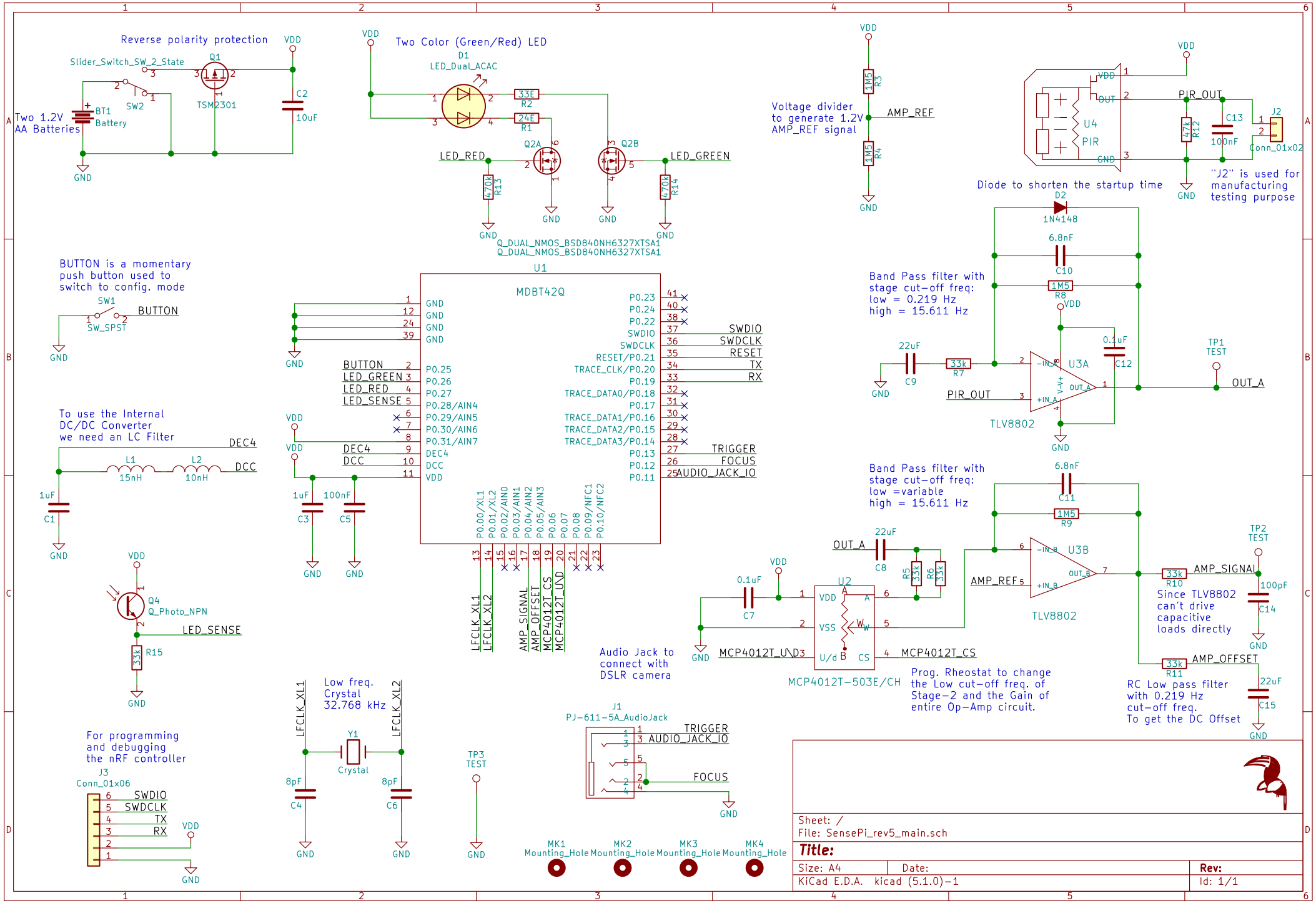
Reverse polarity protection
Slider_Switch_SW_2_State
Q1
TSM2301
SW2
BT1
Battery
Two 1.2V
AA Batteries
C2
10uF
VDD
GND
Two Color (Green/Red) LED
D1
LED_Dual_ACAC
33E
R2
24E
R1
Q2A
Q2B
LED_RED
LED_GREEN
470k
R13
470k
R14
Q_DUAL_NMOS_BSD840NH6327XTSA1
Q_DUAL_NMOS_BSD840NH6327XTSA1
Voltage divider
to generate 1.2V
AMP_REF signal
1M5
R3
1M5
R4
AMP_REF
U4
PIR
PIR_OUT
47k
R12
C13
100nF
J2
Conn_01x02
"J2" is used for
manufacturing
testing purpose
Diode to shorten the startup time
D2
1N4148
BUTTON is a momentary
push button used to
switch to config. mode
SW1
SW_SPST
BUTTON
U1
MDBT42Q
GND
GND
GND
GND
BUTTON
LED_GREEN
LED_RED
LED_SENSE
DEC4
DCC
VDD
P0.25
P0.26
P0.27
P0.28/AIN4
P0.29/AIN5
P0.30/AIN6
P0.31/AIN7
P0.23
P0.24
P0.22
SWDIO
SWDCLK
RESET/P0.21
TRACE_CLK/P0.20
P0.19
TRACE_DATA0/P0.18
P0.17
TRACE_DATA1/P0.16
TRACE_DATA2/P0.15
TRACE_DATA3/P0.14
P0.13
P0.12
P0.11
TRIGGER
FOCUS
AUDIO_JACK_IO
P0.00/XL1
P0.01/XL2
P0.02/AIN0
P0.03/AIN1
P0.04/AIN2
P0.05/AIN3
P0.06
P0.07
P0.08
P0.09/NFC1
P0.10/NFC2
LFCLK_XL1
LFCLK_XL2
AMP_SIGNAL
AMP_OFFSET
MCP4012T_CS
MCP4012T_U\D
Band Pass filter with
stage cut-off freq:
low = 0.219 Hz
high = 15.611 Hz
6.8nF
C10
1M5
R8
22uF
C9
33k
R7
0.1uF
C12
U3A
TLV8802
PIR_OUT
OUT_A
TP1
TEST
To use the Internal
DC/DC Converter
we need an LC Filter
L1
15nH
L2
10nH
1uF
C1
1uF
C3
100nF
C5
Band Pass filter with
stage cut-off freq:
low =variable
high = 15.611 Hz
6.8nF
C11
1M5
R9
22uF
C8
R5
33k
R6
33k
U3B
TLV8802
AMP_REF
33k
R10
AMP_SIGNAL
TP2
TEST
100pF
C14
Since TLV8802
can't drive
capacitive
loads directly
Q4
Q_Photo_NPN
LED_SENSE
33k
R15
0.1uF
C7
U2
MCP4012T-503E/CH
MCP4012T_U\D
MCP4012T_CS
Audio Jack to
connect with
DSLR camera
Prog. Rheostat to change
the Low cut-off freq. of
Stage-2 and the Gain of
entire Op-Amp circuit.
33k
R11
AMP_OFFSET
22uF
C15
RC Low pass filter
with 0.219 Hz
cut-off freq.
To get the DC Offset
Low freq.
Crystal
32.768 kHz
Y1
Crystal
8pF
C4
8pF
C6
J1
PJ-611-5A_AudioJack
TRIGGER
AUDIO_JACK_IO
FOCUS
TP3
TEST
For programming
and debugging
the nRF controller
J3
Conn_01x06
SWDIO
SWDCLK
TX
RX
MK1
Mounting_Hole
MK2
Mounting_Hole
MK3
Mounting_Hole
MK4
Mounting_Hole
Sheet: /
File: SensePi_rev5_main.sch
Title:
Size: A4
Date:
Rev:
KiCad E.D.A. kicad (5.1.0)-1
Id: 1/1