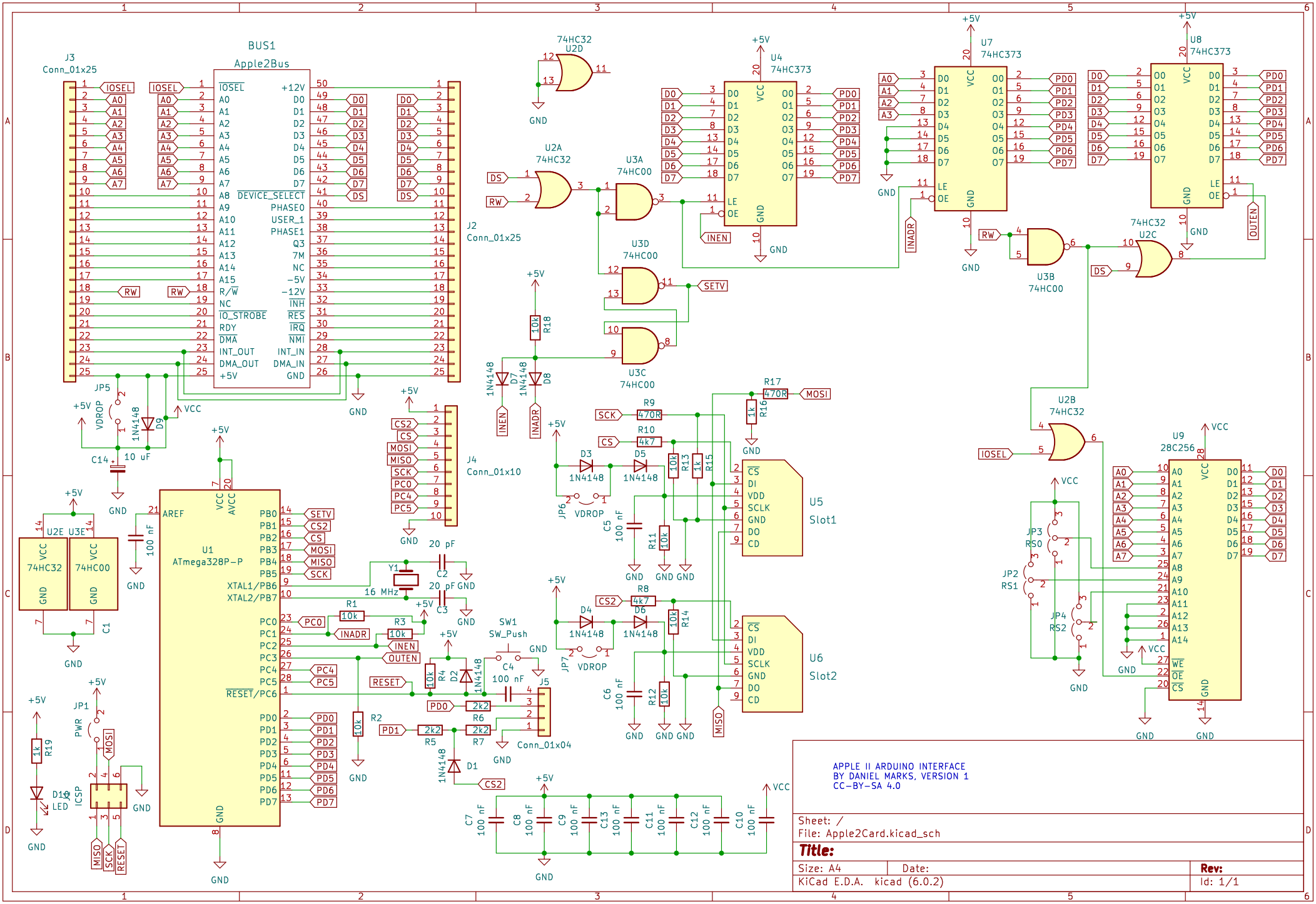
BUS1
Apple2Bus
J3
Conn_01x25
J2
Conn_01x25
U1
ATmega328P-P
U2D
74HC32
U2A
74HC32
U3A
74HC00
U3D
74HC00
U3C
74HC00
U3B
74HC00
U2C
74HC32
U2B
74HC32
U4
74HC373
U7
74HC373
U8
74HC373
U9
28C256
U5
Slot1
U6
Slot2
U2E
74HC32
U3E
74HC00
J4
Conn_01x10
J5
Conn_01x04
SW1
SW_Push
Y1
16 MHz
JP1
PWR
JP2
RS1
JP3
RS0
JP4
RS2
JP5
VDROP
JP6
VDROP
JP7
VDROP
ICSP
D10
LED
+5V
GND
VCC
APPLE II ARDUINO INTERFACE
BY DANIEL MARKS, VERSION 1
CC-BY-SA 4.0
Sheet: /
File: Apple2Card.kicad_sch
Title:
Size: A4
Date:
Rev:
KiCad E.D.A. kicad (6.0.2)
Id: 1/1