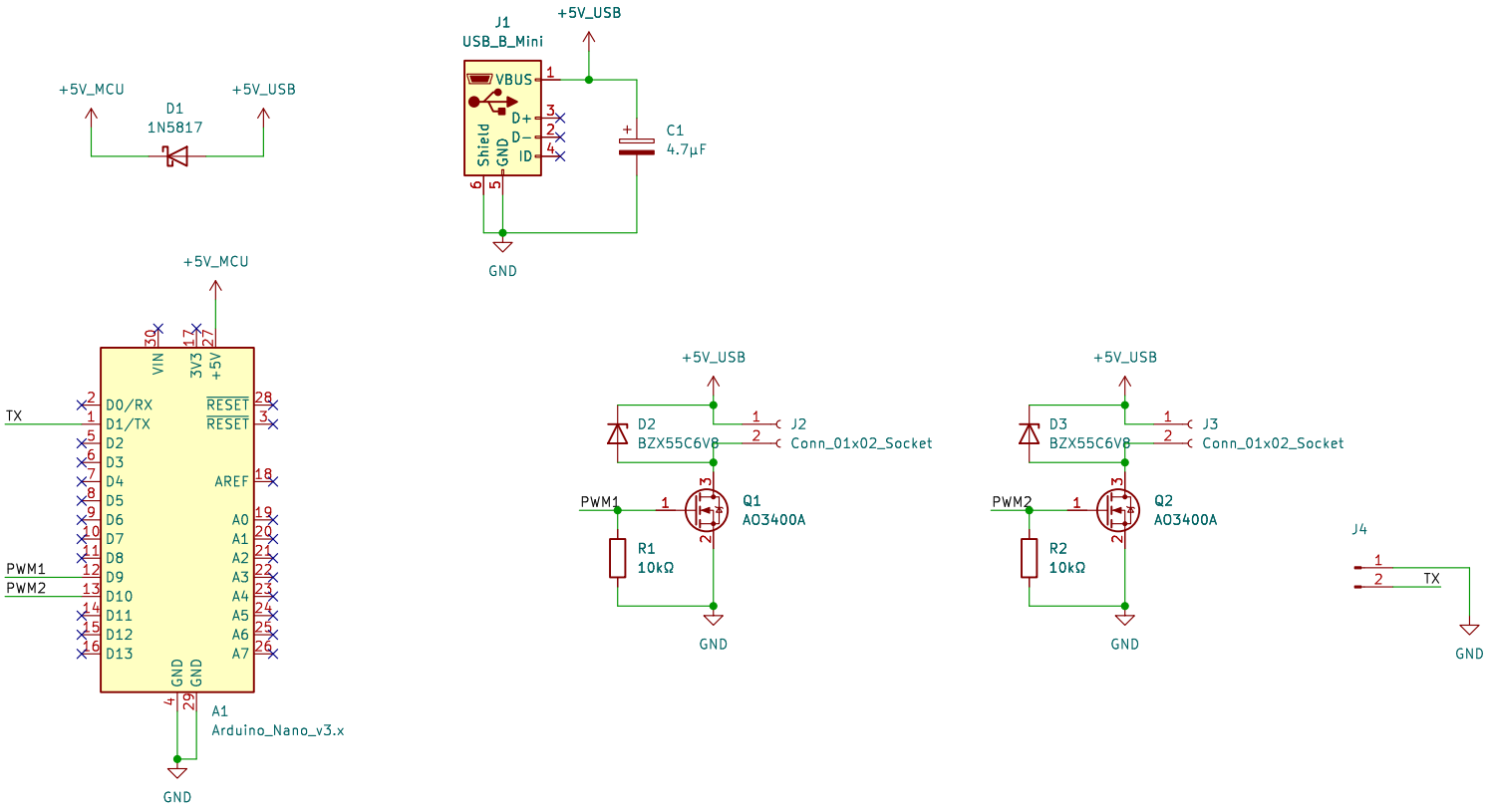

Sheet: /
File: taiko_vibrator.kicad_sch

Title:

Size: A4	Date:	Rev:
KiCad E.D.A. kicad 7.0.5		Id: 1/1