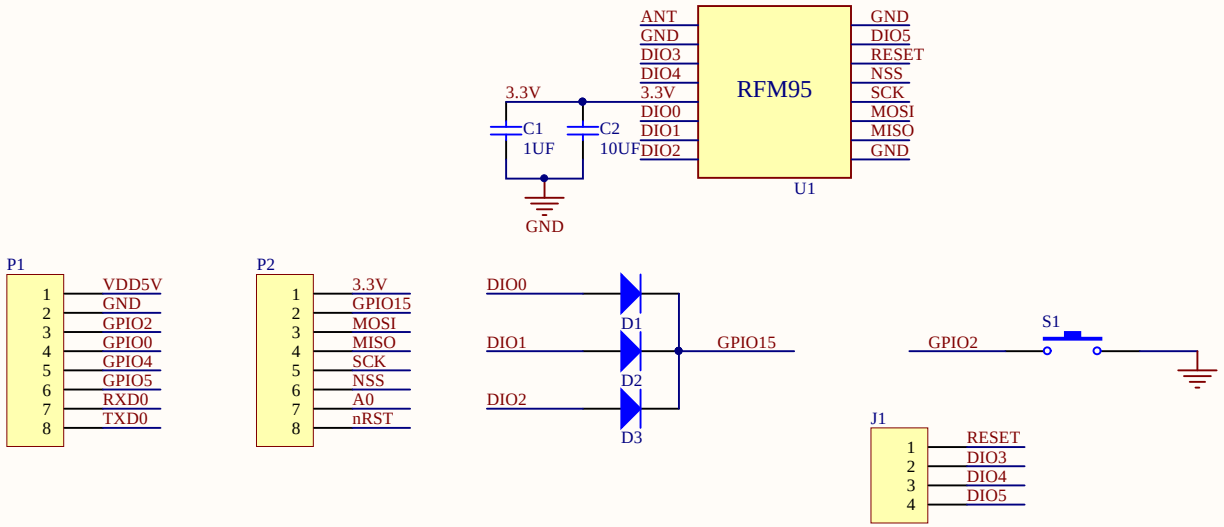

Title		
Size A4	Number	Revision
Date: 2017/7/31		Sheet of
File: E:\Work\..\ESPea lora.SchDoc		Drawn By: