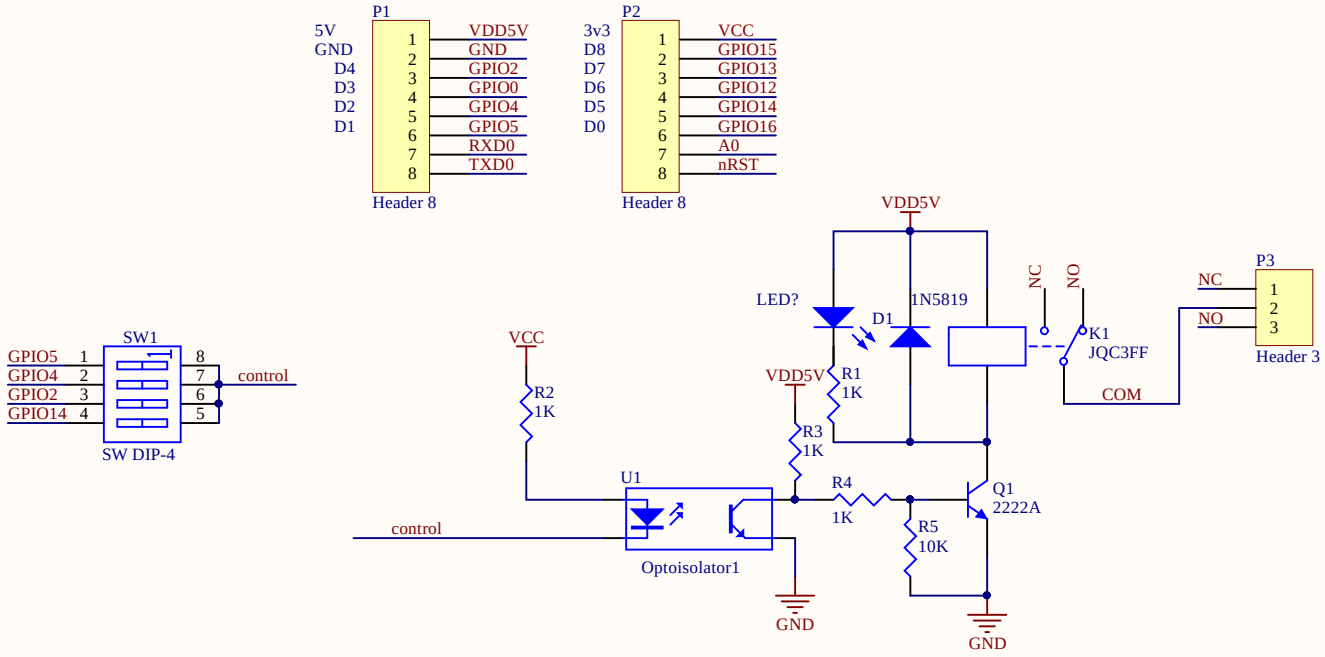

Title		
Size A4	Number	Revision
Date: 2016/11/18		Sheet of
File: E:\Work\..\ESPea RELAY.SchDoc		Drawn By: