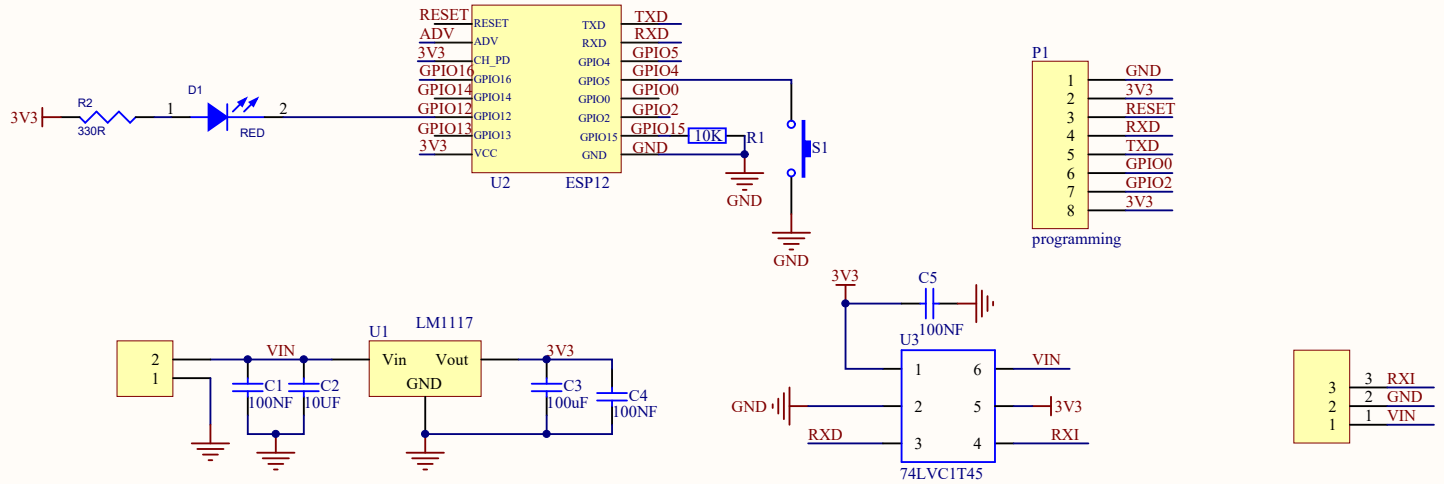

Title		
Size A4	Number	Revision
Date: 2016/9/29		Sheet of
File: E:\Work\..\W2812_simple.SchDoc		Drawn By: