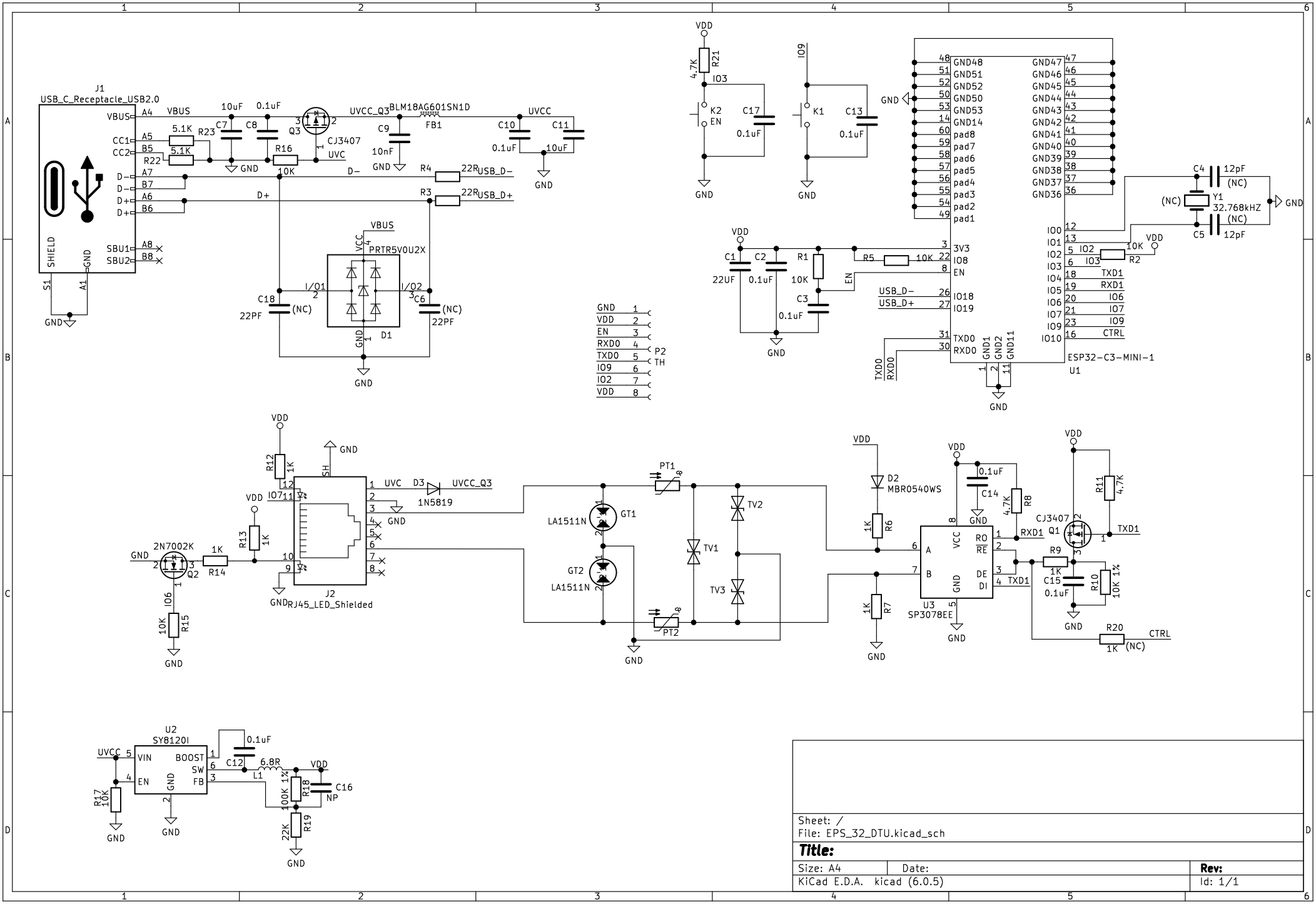

Sheet: /
File: EPS_32_DTU.kicad_sch

Title:

Size: A4	Date:	**Rev:**
KiCad E.D.A. kicad (6.0.5)		Id: 1/1