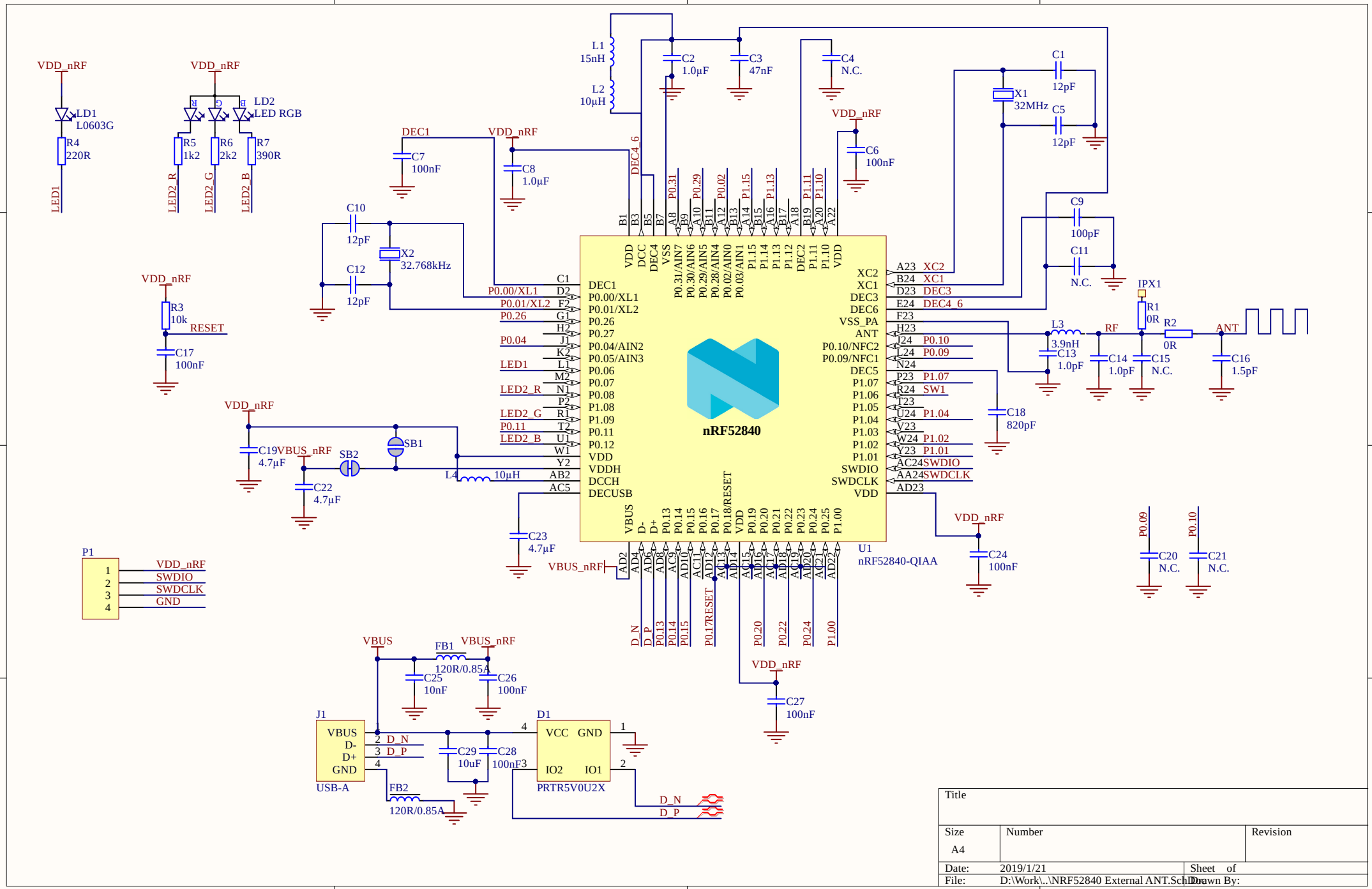
VDD_nRF
LD1
L0603G
R4
220R
LED1
LD2
LED RGB
R5
1k2
R6
2k2
R7
390R
LED2_R
LED2_G
LED2_B
L1
15nH
L2
10µH
C2
1.0µF
C3
47nF
C4
N.C.
C1
12pF
X1
32MHz
C5
12pF
C6
100nF
DEC1
C7
100nF
C8
1.0µF
DEC4_6
C10
12pF
C12
12pF
X2
32.768kHz
C9
100pF
C11
N.C.
R3
10k
RESET
C17
100nF
IPX1
R1
0R
R2
0R
L3
3.9nH
RF
ANT
C13
1.0pF
C14
1.0pF
C15
N.C.
C16
1.5pF
C18
820pF
C19
4.7µF
VBUS_nRF
SB2
SB1
C22
4.7µF
L4
10µH
C23
4.7µF
nRF52840
U1
nRF52840-QIAA
C24
100nF
P0.09
P0.10
C20
N.C.
C21
N.C.
P1
SWDIO
SWDCLK
GND
VBUS
FB1
120R/0.85A
C25
10nF
C26
100nF
J1
VBUS
D-
D+
GND
USB-A
D_N
D_P
C29
10uF
C28
100nF
FB2
120R/0.85A
D1
VCC
GND
IO2
IO1
PRTR5V0U2X
C27
100nF
Title
Size
A4
Number
Revision
Date: 2019/1/21
Sheet of
File: D:\Work\..\NRF52840 External ANT.SchDoc
Drawn By: