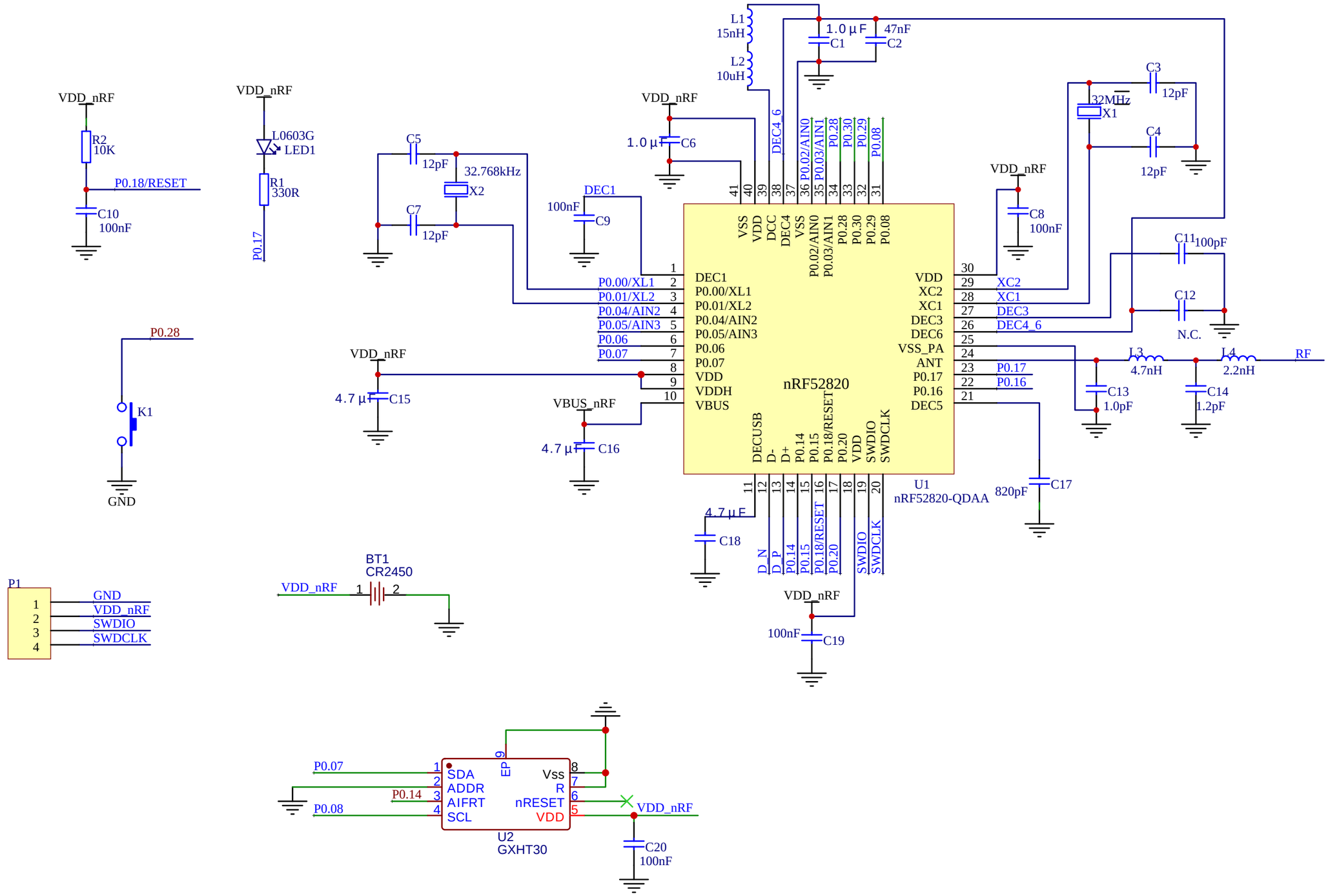

TITLE: N07_nRF52820		REV: 1.0
	Company: Beijing April Brother Technology Co., Ltd.	Sheet: 1/1
	Date: 2022-11-01 Drawn By:	