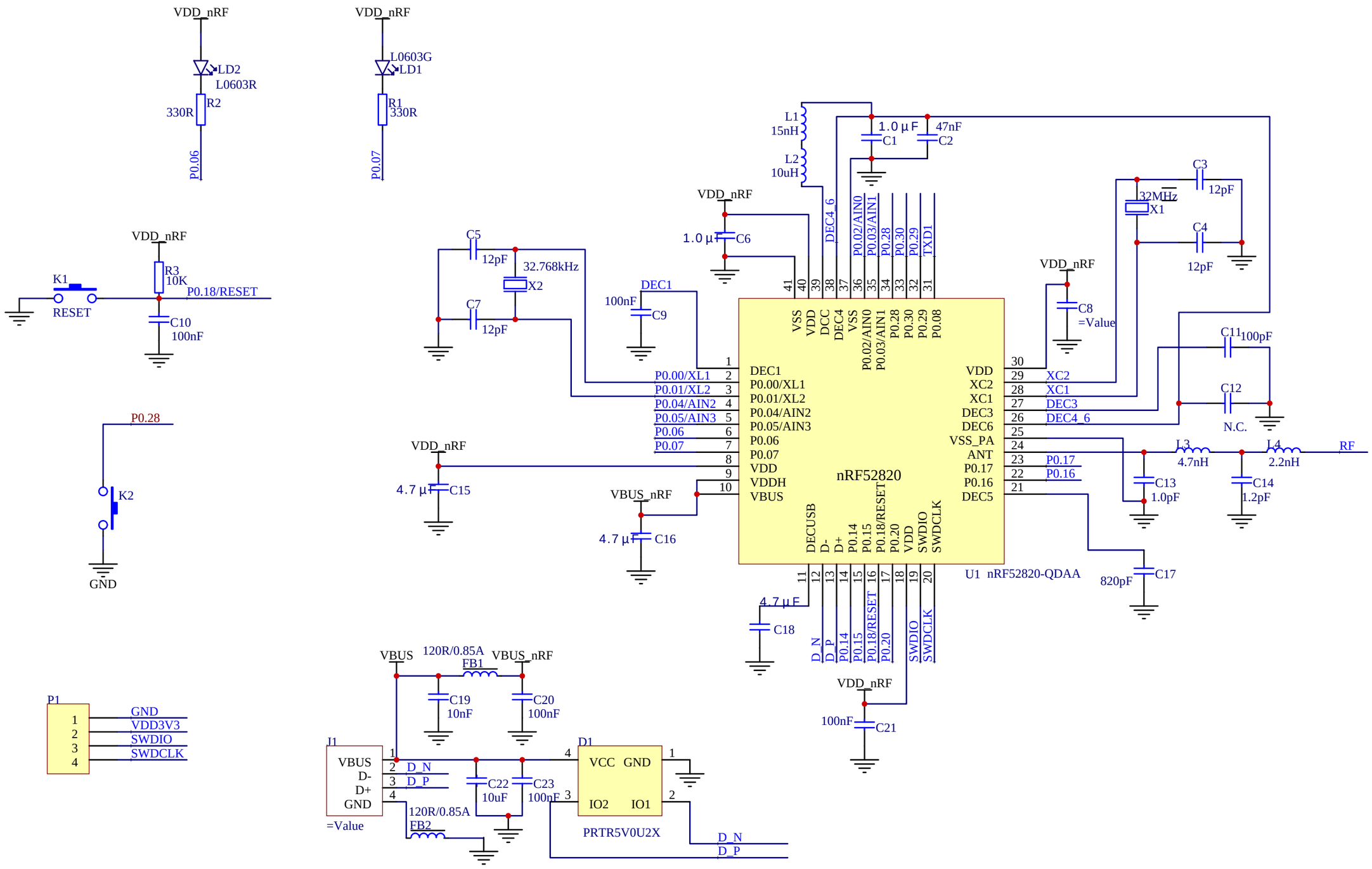

TITLE: NRF52820_Dongle.SchDoc		REV: 1.0
立创EDA	Company: Beijing April Brother Technology Co., Ltd.	Sheet: 1/1
	Date: 2021-04-23 Drawn By: longhun26	