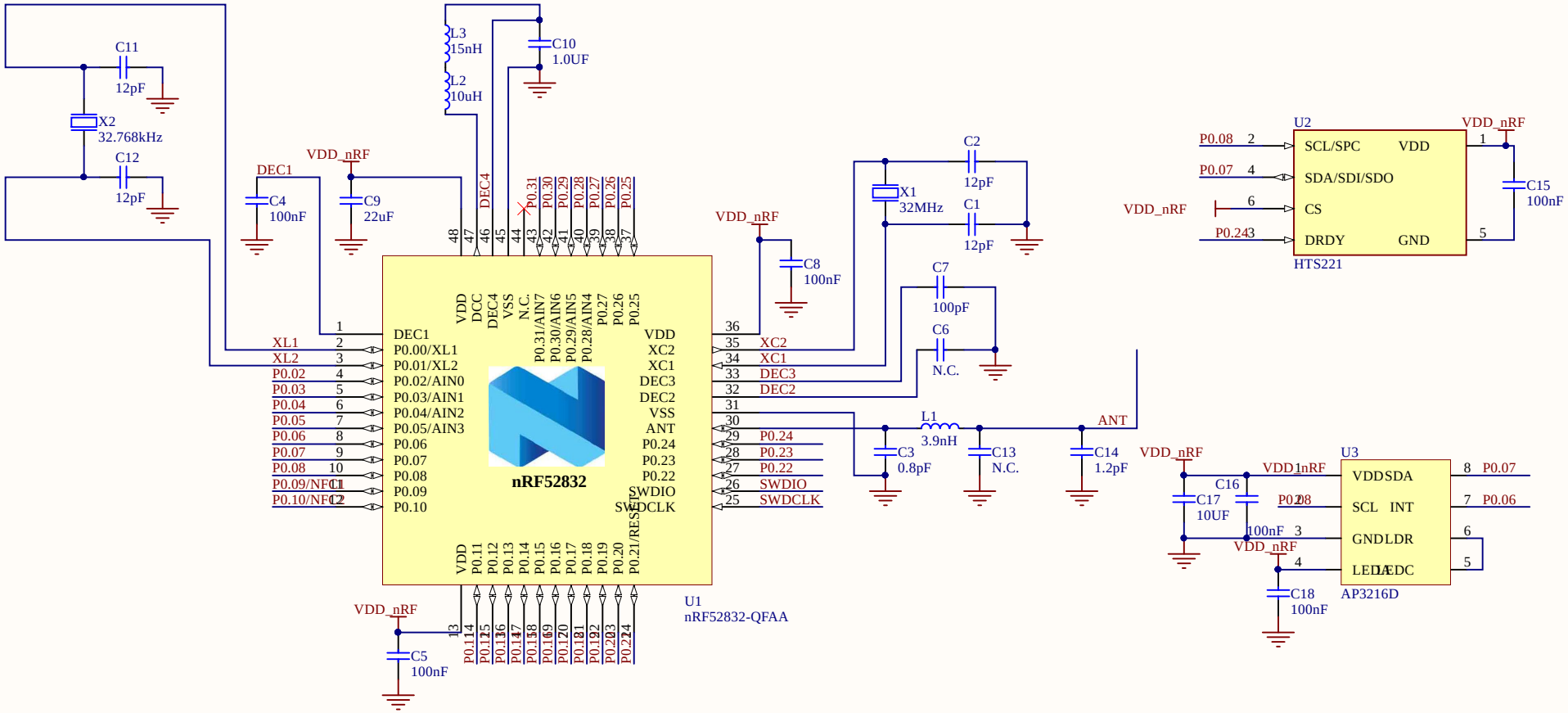


| Title | | |
|---|---|---|
| Size A4 | Number | Revision |
| Date: 2018/3/9 | | Sheet of |
| File: E:\Work\..\Nrf52832 Sensor.SchDoc | | Drawn By: |