Free Standard provided by BIS via BSB Edge Private Limited to Apurv Bharadiya - (apurvbharadiya44@gmail.com) 106.194.49.41.

भारतीय मानक
Indian Standard

IS 6512 : 2019
(Reaffirmed 2020)

ठोस भाराश्रित बाँधो के डिजाइन के लिए मानदंड

(दूसरा पुनरीक्षण)

Criteria for Design of Solid Gravity Dams

(Second Revision)

ICS 93.16

© BIS 2019

भारतीय मानक ब्यूरो
BUREAU OF INDIAN STANDARDS
मानक भवन, 9 बहादुरशाह ज़फर मार्ग, नई दिल्ली-110002
MANAK BHAVAN, 9 BAHADUR SHAH ZAFAR MARG
NEW DELHI-110002
www.bis.org.in www.standardsbis.in

June 2019 **Price Group 4**

Free Standard provided by BIS via BSB Edge Private Limited to Apurv Bharadiya - (apurvbharadiya44@gmail.com) 106.194.49.41.

Dams and Spillways Sectional Committee, WRD 09

FOREWORD

This Indian Standard was adopted by the Bureau of Indian Standards, after the draft finalized by the Dams and Spillways Sectional Committee had been approved by the Water Resources Division Council.

Designs are made more rational by fully utilizing the available data from analytical procedures, laboratory, field investigations and measurements of the behaviour of structures in service. It is essential that all design loads are carefully chosen to represent, as accurately as possible the actual loads that will act on the structure and that all the resistive forces used in design represent as accurate an evaluation as possible. It is, in addition, necessary that dams be frequently inspected (as in all cases, uncertainties exist regarding such factors as loads, resistive forces or characteristics of the foundation) and adequate observations and measurements be made of the structural behaviour of the dam and the foundation to ensure that the structure is safe.

As no criteria may be applicable under all conditions, the criteria laid down in this standard are preceded by a discussion of the underlying considerations to explain the basis for the criterion to any special condition or to the appropriateness of any deviation. This also helps in the frequent examination of design practices essential to ensure that they remain consistent with the best existing knowledge and concepts, by allowing revisions needed in the light of fresh data. At any time, the criteria are meant to be supplemented with the latest available knowledge.

This standard was first published in 1972 and was revised in 1984.

Since then more dams have been designed and constructed in the country and more experience has been gained. The standard is, therefore revised to reflect the latest practices. Important change made in the standard after incorporating necessary corrections include the following:

a) The requirements for freeboard for solid gravity dams has been removed from this standard and shall be given in IS 10635.
b) A new clause for Foundation Strength Criteria **6.10.4** has been included.

For the purpose of deciding whether a particular requirement of this standard is complied with, the final value, observed or calculated, expressing the results of a test or analysis shall be rounded off in accordance with IS 2 : 1960 ‘Rounding off numerical values (*revised*)’. The number of significant places retained in the rounded off value should be the same as that of the specified value in this standard.

Free Standard provided by BIS via BSB Edge Private Limited to Apurv Bharadiya - (apurvbharadiya44@gmail.com) 106.194.49.41.

Indian Standard

CRITERIA FOR DESIGN OF SOLID GRAVITY DAMS

(Second Revision)

1 SCOPE

This standard lays down criteria for design of solid gravity dams made of masonry or concrete or both.

2 REFERENCES

The standards listed below contain provisions which, through reference in this text, constitute provisions of this standard. At the time of publication, the editions indicated were valid. All standards are subject to revision and parties to agreements based on these standards are encouraged to investigate the possibility of applying the most recent editions of the standards indicated below:

IS No.	*Title*
1893 : 1984	Criteria for earthquake resistant design of structures (*fourth revision*)
7746 : 1991	Code of practice for *in-situ* shear test on rock (*first revision*)
8605 : 1977	Code of practice for construction of masonry in dams
10635 : 2014	Freeboard requirements in dams — Guidelines

3 REQUIREMENTS FOR STABILITY

The design shall satisfy the following requirements of stability:

a) The dams shall be safe against sliding on any plane or combination of planes within the dam, at the foundation or within the foundation;

b) The dam shall be safe against overturning at any plane within the dam, at the base, or at any plane below the base; and

c) The safe unit stresses in the concrete or masonry of the dam or in the foundation material shall not be exceeded.

4 FORCES CONSIDERED IN THE ANALYSIS OF STABILITY

4.1 The following forces may be considered as affecting the design:

a) Dead load,

b) Reservoir and tailwater loads,

c) Uplift pressure,

d) Earthquake forces,

e) Earth and silt pressures,

f) Ice pressure,

g) Wind pressure,

h) Wave pressure, and

j) Thermal loads

4.2 The forces to be resisted by a gravity dam fall into two categories as given below:

a) Forces, such as weight of the dam and water pressure, which can be directly calculated from the unit weights of the materials and properties of fluid pressures; and

b) Forces, such as uplift, earthquake loads, silt pressure and, ice pressure, which can only be assumed on the basis of assumption of varying degree of reliability.

NOTE — It is in the estimating of the second category of forces that special care has to be taken and reliance placed on available data, experience, and judgments.

4.3 For consideration of stability the following assumptions are made:

a) That the dam is composed of individual transverse vertical elements each of which carries its load to the foundation without transfer of load from or to adjacent elements (*see* **8.1.3**).

NOTE — However, in the stability analysis of a gravity dam, it becomes frequently necessary to make an analysis of the whole block, wherever special features of foundation and large openings so indicate.

b) That the vertical stress varies linearly from upstream face to downstream face on any horizontal section.

5 LOAD COMBINATIONS

5.1 Criteria

Gravity dam design should be based on the most adverse load combination A, B, C, D, E, F or G given below using the safety factors prescribed. Depending on the scope and details of the various project components, site conditions and construction one or more of the following loading combinations may not be applicable ‘ipso-facto’ and may need suitable modifications :

Free Standard provided by BIS via BSB Edge Private Limited to Apurv Bharadiya - (apurvbharadiya44@gmail.com) 106.194.49.41.

a) *Load Combination A (Construction Condition)* — Dam completed but no water in reservoir and no tailwater.
b) *Load combination B (Normal operation condition)* — Full reservoir elevation, normal dry weather tailwater, normal uplift ; ice and silt (if applicable);
c) *Load combination C (Flood discharge condition)* — Reservoir at maximum flood pool elevation, all gates open, tailwater at flood elevation, normal uplift, and silt (if applicable);
d) *Load combination D* — Combination A, with earthquake;
e) *Load combination E* — Combination B, with earthquake but no ice;
f) *Load combination F* — Combination C, but with extreme uplift (drains in-operative); and
g) *Load Combination G* — Combination E, but with extreme uplift (drains inoperative).

6 DESIGN CRITERIA

6.1 Dead Load

6.l.1 *General*

The dead load to be considered comprises the weight of the concrete or masonry or both plus the weight of appurtenances such as piers, gates and bridges. The unit weight of concrete and masonry varies considerably depending upon the various materials that make them. It is essential to make certain that the assumed unit weight for concrete/masonry or both can be obtained with the available aggregates/stones.

6.1.2 *Criteria for Design*

6.1.2.1 The magnitude of dead load is considered as the mass of concrete or masonry or both plus that of the appurtenances, such as gates and bridges.

6.1.2.2 For preliminary designs, the unit mass of concrete and masonry may be taken as 2 400 kg/m^3 and 2 300 kg/m^3 , respectively. For final designs the unit mass shall be based on actual test data.

6.2 Reservoir and Tailwater Loads

6.2.1 *General*

Although the weight of water varies slightly with temperature, the variation is usually ignored. In case of low overflow dams, the dynamic effect of the velocity of approach may be significant and will deserve consideration. The mass of the water flowing over the top of the spillway is not considered in the analysis since the water usually approaches spouting velocity and exerts little pressure on the spillway crest. If gates or other control features are used on the crest they are treated as part of the dam so far as application of water pressure is concerned.

6.2.2 *Criteria for Design*

The mass of water is taken as 1 000 kg/m^3. Linear distribution of the static water pressure acting normal to the face of the dam is assumed. Tailwater pressure adjusted for any retrogression should be taken at full value for non-overflow sections and at a reduced value for overflow sections depending on the type of energy dissipation arrangement adopted and anticipated water surface profile downstream. The full value of corresponding tailwater should, however, be used in the case of uplift.

6.3 Uplift Pressure

6.3.1 Uplift forces occur as internal pressures in pores, cracks and seams within the body of the dam, at the contact between the dam and its foundation and within the foundation. It is recognized that there are two constituent elements in uplift pressure; the area factor or the percentage of the area on which uplift acts and the intensity factor or the ratio which the actual intensity of uplift pressure bears to the intensity gradient extending from head water to tailwater at various points.

6.3.1.1 Effective downstream drainage, whether natural or artificial, will generally limit the uplift at the toe of the dam to tailwater pressure. Formed drains in the body of the dam and drainage holes drilled subsequent to grouting in the foundation, where maintained in good repair, are effective in giving a partial relief to the uplift pressure intensities under and in the body of the dam. The degree of effectiveness of the system will depend upon the character of the foundation and the dependability of the effective maintenance of the drainage system. In case observations of the behaviour of the dam will indicate the uplift pressure actually acting on the structure and when the uplift pressure are seen to approach or exceed design pressures, prompt remedial measures should necessarily be taken to reduce the uplift pressures to values below the design pressures.

6.3.2 *Criteria for Design*

The following criteria are recommended for calculating uplift forces:

a) Uplift pressure distribution in the body of the dam shall be assumed, in case of both preliminary and final designs, to have an intensity which at the line of the formed drains exceeds the tailwater head by one-third the differential between reservoir level and tailwater level. The pressure gradient shall then be extended linearly to heads

Free Standard provided by BIS via BSB Edge Private Limited to Apurv Bharadiya - (apurvbharadiya44@gmail.com) 106.194.49.41.

corresponding to reservoir level and tailwater level. The uplift shall be assumed to act over 100 percent of the area.

b) Uplift pressure distribution at the contact plane between the dam and its foundation, and within the foundation shall be assumed for preliminary designs to have an intensity which at the line of drains/drainage holes exceeds the tailwater head by one third the differential between the reservoir and tailwater heads. The pressure gradient shall then be extended linearly to heads corresponding to reservoir level and tailwater level. For final designs, the uplift criteria in case of dams founded on compact and unfissured rock shall be as specified above. In case of highly jointed and fractured foundation, however, the pressure distribution may be required to be based on special methods of analysis taking into consideration the foundation condition after the treatment proposed. The uplift shall be assumed to act over 100 percent of the area (*see* Fig. 1).

c) For loading conditions F and G (*see* **5.1**) the uplift shall be taken as varying linearly from the appropriate reservoir water pressure at the upstream face to the appropriate tailwater pressure at the downstream face. The uplift is assumed to act over 100 percent of the area (*see* Fig. 2).

d) No reduction in uplift is assumed at the downstream toe of spillways on account of the reduced water surface elevation (relative to normal tailwater elevation) that may be expected immediately downstream of the structures.

e) It is assumed that uplift pressures are not affected by earthquakes.

6.4 Earthquake Forces

The criteria for seismic design shall be in accordance with IS 1893.

6.5 Earth and Silt Pressures

6.5.1 *General*

Gravity dams are subjected to earth pressures on the downstream and upstream faces where the foundation trench is to be backfilled. Except in the abutment sections in specific cases and in the junctions of the dam with an earth or rockfill embankment, earth pressures usually have a minor effect on the stability of the structure and may be ignored.

6.5.1.1 The present procedure is to treat silt as a saturated cohesion less soil having full uplift and whose value of internal friction is not materially changed on account of submergence.

6.5.1.2 Experiments indicate that silt pressure and water pressure exist together in a submerged fill and

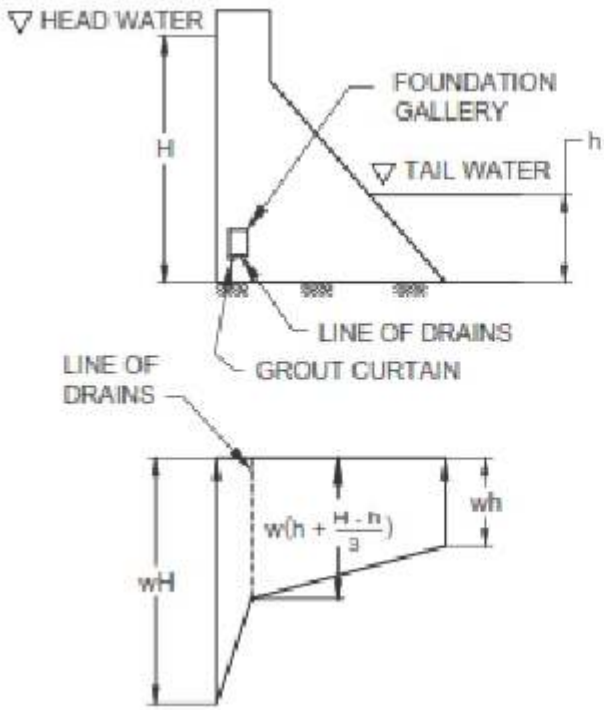

FIG. 1 NORMAL UPLIFT PRESSURE DIAGRAM

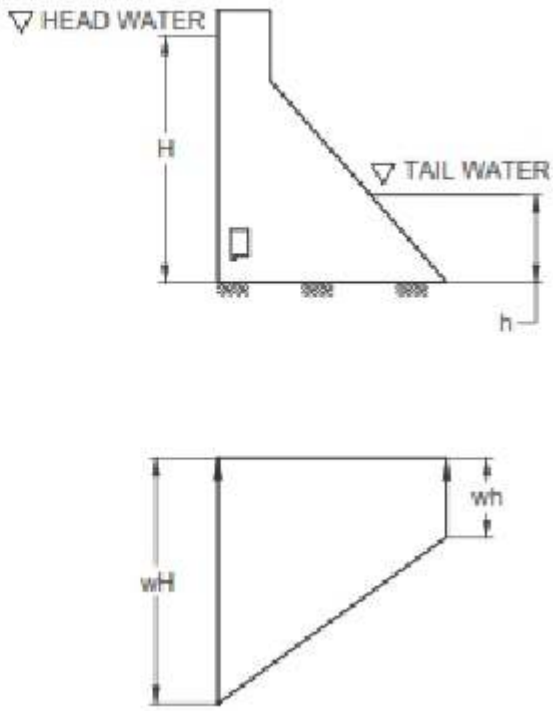

FIG. 2 EXTREME UPLIFT PRESSURE DIAGRAM

Free Standard provided by BIS via BSB Edge Private Limited to Apurv Bharadiya - (apurvbharadiya44@gmail.com) 106.194.49.41.

that the silt pressure on the dam is reduced in the proportion that the weight of the fill is reduced by submergence.

6.5.2 *Criteria for Design*

The following criteria are recommended for calculating forces due to silt:

a) Horizontal 'silt and water pressure' is assumed to be equivalent to that of a fluid with a density of 1 360 kg/m^3, and

b) Vertical 'silt and water pressure' is determined as if silt and water together have a density of 1 925 kg/m^3.

6.6 Ice Pressure

6.6.1 The problem of ice pressure in the design of dam is not encountered in India except, perhaps, in a few localities.

6.6.1.1 Ice expands and contracts with changes in temperature. In a reservoir completely frozen over, a drop in the air temperature or in the level of the reservoir water may cause the opening up of cracks which subsequently fill with water and frozen solid. When the next rise in temperature occurs, the ice expands and, if restrained, it exerts pressure on the dam. In some cases the ice exerts pressure on the dam when the water level rises. For ice sheets of wide extent this pressure is moderate but in smaller ice sheets the pressure may be of the same order of magnitude as in the case of extreme temperature variation.

6.6.1.2 Ice is plastic and flows under sustained pressure. The duration of rise in temperature is, therefore, as important as the magnitude of the rise in temperature in the determination of the pressure exerted by ice on the dam. Wind drag also contributes to the pressure exerted by ice to some extent. Wind drag is dependent on the size and shape of the exposed area, the roughness of the surface area and the direction of wind.

6.6.1.3 Existing design information on ice pressure is inadequate and somewhat approximate. Good analytical procedures exist for computing ice pressures, but the accuracy of results is dependent upon certain physical data which have not been adequately determined. These data should come from field and laboratory.

6.6.1.4 Till specific reliable procedures become available for the assessment of ice pressure it may be provided for at the rate of 250 kPa applied to the face of dam over the anticipated area of contact of ice with the face of dam.

6.7 Wind Pressure

Wind pressure does exist but is seldom a significant factor in the design of a dam. Wind loads may, therefore, be ignored.

6.8 Wave Pressure

6.8.1 In addition to the static water loads the upper portions of dams are subject to the impact of waves. Wave pressure against massive dams of appreciable height is usually of little consequence. The force and dimensions of wave depend mainly on the extent and configuration of the water surface, the velocity of wind and the depth of reservoir water. The height of wave is generally more important in the determination of the free board requirements of dams to prevent overtopping by wave splash. An empirical method based upon research studies on specific cases has been recommended by T. Saville for computation of wave height. It takes into account the effect of the shape of reservoir and also wind velocity over water surface rather than on land by applying necessary correction. It gives the value of different wave heights and the percentage of waves exceeding these heights so that design wave height for required exceedance can be selected.

6.8.2 *Criteria for Design*

The following formulae are made use of in determining wave height, wave pressure and wave force:

a) For determining the height of wave the method recommended by T. Saville should be adopted.

b) The maximum unit pressure p_w, in kPa, occurs at 0.125 h_w above the still water level and is given by the equation:

$$p_w = 24\ h_w$$

where h_w = height of wave, in m.

c) The wave pressure diagrams can be approximately represented by the triangle 1-2-3 in Fig. 3. The total wave force P_w (in kN) is given by the area of the triangle, or

$$P_w = 20\ h_w^2$$

d) The point of application of the wave force is at a height of 0.375 h_w above the still water level.

6.8.3 Freeboard requirements shall be as laid down in IS 10635.

6.8.3.1 The wave height and wind set up should be calculated according to the method recommended by T. Saville.

6.8.3.2 Wind velocity of 120 km/h over water in case of normal pool condition and of 80 km/h over water in case of maximum reservoir condition should generally

Free Standard provided by BIS via BSB Edge Private Limited to Apurv Bharadiya - (apurvbharadiya44@gmail.com) 106.194.49.41.

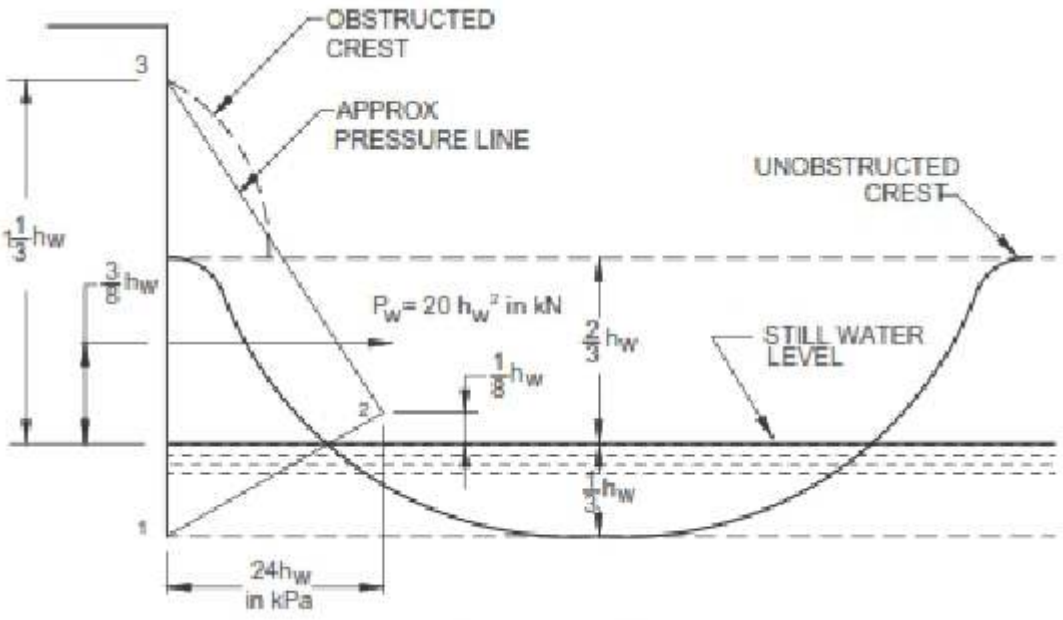

FIG. 3 WAVE DATA

be assumed for calculation of wave height if meteorological data is not available. When maximum wind velocity is known, the same shall be used for full reservoir level (FRL) condition and 2/3 times that for MWL condition.

6.9 Thermal Loads

Measures for temperature control of concrete in solid gravity dams are adopted during construction. Yet it is noticed that stresses in the dam are affected due to temperature variation in the dam on the basis of data recorded from the thermometer embedded in the body of the dam. The cyclic variation of air temperature and the solar radiation on the downstream side and the reservoir temperature on the upstream side also effect the stresses in the dam. Even the deflection of the dam is maximum in the morning and it goes on reducing to a minimum value in the evening. The magnitude of deflection is also affected depending on whether the spillway is running or not. It is generally less when spillway is working than when it is not working. While considering the thermal load, temperature gradients are assumed depending on location, orientation, surrounding topography, etc.

6.10 Reaction of Foundations

The determination by statics of the reaction of the foundation of dam is covered in various texts. In general, the resultant of all horizontal and vertical forces including uplift should be balanced by an equal and opposite reaction at the foundation consisting of the total vertical reaction and the total horizontal shear and friction at the base and the resisting shear and friction of the passive wedge, if any. For the dam to be in static equilibrium the location of this force is such that the summation of moments is equal to zero. The distribution of the vertical reaction is assumed as trapezoidal for convenience only, with a knowledge that the elastic and plastic properties of both the foundation material and the concrete do affect the actual distribution.

6.10.1 The problem of determining the actual distribution is complicated by the horizontal reaction, internal stress relations and other theoretical considerations. Moreover, variation of foundation materials with depth, cracks and fissures which affect the resistance of the foundation also make the problem more complex.

6.10.2 For overflow sections, the base width is generally determined by projecting the spillway slope to the foundation line and all concrete downstream from this line is disregarded. If a vertical longitudinal joint is not provided at this point, the mass of concrete downstream from the theoretical toe must be investigated for internal stresses.

6.10.3 Internal stresses and foundation pressures should be computed both with and without uplift to determine the worst condition.

6.10.4 *Foundation Strength Criteria*

Following factors of safety in respect of maximum allowable compressive stress in foundation for different loading condition shall be ensured:

Free Standard provided by BIS via BSB Edge Private Limited to Apurv Bharadiya - (apurvbharadiya44@gmail.com) 106.194.49.41.

Loading Condition	*Factor of Safety*
B	4
A, C	2.7
D, E, F, G	1.3

6.11 Resistance Against Overturning

Before a gravity dam overturns bodily, other types of failures may occur, such as cracking of the upstream material due to tension, increase in uplift, crushing of toe material and sliding. A gravity dam is, therefore, considered safe against overturning if the criteria of no tension on the upstream face, the resistance against sliding as well as the quality and strength of concrete/ masonry of the dam and its foundation are satisfied assuming the dam and foundation as a continuous body.

6.12 Sliding Resistance

6.12.1 *General*

Many of the loads on the dam are horizontal or have horizontal components which are resisted by frictional or shearing forces along horizontal or nearly horizontal planes in the body of the dam, on the foundation or on horizontal or nearly horizontal seams in the foundation. The stability of a dam against sliding is evaluated by comparing the minimum total available resistance along the critical path of sliding (that is, along that plane or combination of planes which mobilizes the least resistance to sliding) to the total magnitude of the forces tending to induce sliding.

6.12.1.1 Sliding resistance is a function of the cohesion inherent in the materials and at their contact and angle of internal friction of the material at the surface of sliding. The junction plane between the dam and rock is rarely smooth. In fact, special efforts are made to avoid this condition. There may, however, be some lower plane in the foundation where sliding is resisted by friction alone especially if the rock is markedly stratified and horizontality bedded.

6.12.2 *Criteria for Design*

The factor of safety against sliding may be calculated as indicated in **6.12.2.1** on the basis of partial factor of safety in respect of friction (F_ϕ) and partial factor of safety in respect of cohesion (F_c) as given in Table 1.

6.12.2.1 The factor of safety against sliding shall be computed from the following equation and shall not be less than 1.0.

$$F = \left[\frac{\dfrac{(W-U)\tan\phi}{F_\phi} + \dfrac{cA}{F_c}}{P} \right]$$

where

F = factor of safety against sliding.

W = total mass of the dam,

U = total uplift force,

$\tan\varphi$ = coefficient of internal friction of the material,

c = cohesion of the material at the plane considered,

A = area under consideration for cohesion,

F_ϕ = partial factor of safety in respect of friction,

F_c = partial factor of safety in respect of cohesion, and

P = total horizontal force.

6.12.2.2 The value of cohesion and internal friction may be estimated for the purpose of preliminary designs on the basis of available data on similar or comparable materials. For final designs, however, the value of cohesion and internal friction shall be determined by actual laboratory and field tests (*see* IS 7746).

6.13 Quality and Strength of Concrete/Masonry

6.13.1 *General*

The strength of concrete/masonry shall exceed the stresses

Table 1 Partial Factors of Safety Against Sliding
(*Clause* 6.12.2)

Sl No.	Loading Condition	F_ϕ	For Dams and the Contact Plane with Foundation	F_C For Foundation	
				Thoroughly Investigated	Others
(1)	(2)	(3)	(4)	(5)	(6)
i)	A, B, C	1.5	3.6	4.0	4.5
ii)	D, E	1.2	2.4	2.7	3.0
iii)	F, G	1.0	1.2	1.35	1.5

Free Standard provided by BIS via BSB Edge Private Limited to Apurv Bharadiya - (apurvbharadiya44@gmail.com) 106.194.49.41.

anticipated in the structure by a safe margin. The maximum compressive stresses occur at the heel or toe and on planes normal to the faces of the dam. The strength of concrete and masonry varies with age, the kind of cement and other ingredients and their proportions in the work can be determined only by experiment.

6.13.2 *Criteria for Design*

6.13.2.1 *General*

Mix proportions are determined from the results of laboratory tests made with the materials that will be used in the structures. The proportions are selected to produce concrete/masonry of sufficient strength to meet the design requirements multiplied by an appropriate safety factor. In addition to meeting the requirements of strength described in **6.13.2.2** and **6.13.2.3**, the concrete/masonry/mortar should be adequate in regard to placing characteristics, weathering resistance, impermeability and resistance to alkali-aggregate attack.

6.13.2.2 *Compressive Strength*

The compressive strength of concrete and masonry shall conform to the following requirements:

a) *Concrete* — Concrete strength is determined by compressing to failure 150 mm cubes. The strength of concrete should satisfy early load and construction requirements and at the age of one year it should be four times the maximum computed stress in the dam or 14 N/mm^2, whichever is more. The allowable working stress in any part of the structure shall not also exceed 7 N/mm^2.

b) *Masonry* — The compressive strength of masonry is determined by compressing to failure 75cm cubes of the masonry fabricated and cured at temperatures approximating to those expected in the structures (or 45 × 90 cm cylinders cored out of the structures or blocks made for the purpose). This strength should satisfy early load and construction requirements and at one year it should be five times the maximum computed stress on the dam or 12.5 N/mm^2, whichever is more.

NOTE — For the purpose of quality control, correlation between the strength of mortar and that of masonry may be established in suitable smaller size specimens.

6.13.2.3 *Tensile strength*

a) No tensile stress shall be permitted at the upstream face of the dam for load combination B (*see* 5.1). Nominal tensile stresses, however, may be permitted in other load combinations and their permissible value shall not exceed the values given in Table 2.

b) No tensile stress should be permitted at the downstream face of the dam for load combination A. However nominal tensile stress permitted in load combination D should not exceed the value given for condition E in Table 2.

Table 2 Values of Permissible Tensile Stress in Concrete and Masonry
(*Clause* 6.13.2.3)

Sl No.	Load Combination	Permissible Tensile Stress	
		Concrete	Masonry
(1)	(2)	(3)	(4)
i)	C	0.01 f_c	0.005 f_c
ii)	E	0.02 f_c	0.01 f_c
iii)	F	0.02 f_c	0.01 f_c
iv)	G	0.04 f_c	0.02 f_c

Where f_c is the cube compressive strength of concrete/mortar for masonry

7 CONFIGURATION OF DAM AND FOUNDATION

The shape of a dam and curvature in its layout are pertinent with regard to the stability and more favourable stress conditions. Wherever possible, dam and foundation designs take advantage of the favourable conditions accruing from curved shapes, gradual transitions and fillets.

~~8 CONTRACTION~~ JOINTS

8.1 Longitudinal and Transverse Contraction Joints

A contraction joint is a formed vertical or inclined surface between masses of concrete/masonry placed at different times. They divide the dam into convenient sized monoliths to permit convenient and systematic construction and to prevent the formation of haphazard ragged cracks owing to volume changes that cannot be prevented.

8.1.1 *Longitudinal Contraction Joints*

One of the measures used to control cracks parallel to the length of the dam in the case of relatively high dams is to subdivide the monolith into several blocks by longitudinal contraction joints and subsequently grout these joints to ensure monolithic action. The spacing of the joints is largely dictated by convenience of construction and the foundation conditions. A spacing of 20-30 m is generally adopted. There is also now a school of thought which believes that longitudinal joints need to be at very close spacing (about 15 m) if they are to achieve their purpose.

8.1.1.1 However, it is recognized that the practice of dividing a monolith into two or more blocks by introducing joints parallel to the axis is basically unsound unless a high degree of perfection is accomplished in ensuring monolithicity by provision of suitable shear keys

Free Standard provided by BIS via BSB Edge Private Limited to Apurv Bharadiya - (apurvbharadiya44@gmail.com) 106.194.49.41.

and successfully grouting at the appropriate time. It is now being increasingly accepted that a better alternative is to achieve necessary temperature control by pre-cooling of the concrete supplemented, where necessary, by post-cooling and avoid longitudinal contraction joints altogether, even in the case of high dams.

8.1.2 *Transverse Contraction Joints*

The spacing of transverse contraction joints shall be such as to suit the methods of construction, materials of the dam, the foundation conditions and the convenience of the location of control gates, outlet, etc. A spacing of 15 to 25 m may be adopted for concrete dams; larger spacing may be adopted for masonry dams. The general requirement is that each joint extends entirely through the structure.

8.1.3 *Grouting Transverse Contraction Joints*

The characteristics of a dam and its profile determine the magnitude of the load transferred horizontally through the joints to the abutments. If the stream bed is wide and flat, the vertical cantilever blocks from the centre of the dam towards end canyon walls are approximately of the same length. Under load each will deflect downstream by very nearly the same amount and the load transferred horizontally across the joints (provided it is capable of transferring the load) to the abutments will, therefore, be negligible except near the abutment. In a narrow canyon with steep sloping walls, each cantilever block from the centre of the dam towards the canyon wall will be shorter than the preceding one. In this case the load will cause each succeeding blocks to deflect less than the preceding one and more than the succeeding one. If grouted the intervening cantilever block will be affected by adjacent ones. This interaction between blocks causes torsional moments, or twist in the blocks, which materially affect the way in which the loads are distributed to the foundation and abutments. If the joints are keyed and grouted, part of the load will be transferred horizontally to the abutments by both bending and shear in the horizontal beam elements. If the joints are keyed but ungrouted, the load will be transferred horizontally to the abutments by shear across the keys. If the joints are neither keyed nor grouted, the entire load on the dam is transferred to the foundation independently by each block.

Free Standard provided by BIS via BSB Edge Private Limited to Apurv Bharadiya - (apurvbharadiya44@gmail.com) 106.194.49.41.

Bureau of Indian Standards

BIS is a statutory institution established under the *Bureau of Indian Standards Act*, 2016 to promote harmonious development of the activities of standardization, marking and quality certification of goods and attending to connected matters in the country.

Copyright

BIS has the copyright of all its publications. No part of these publications may be reproduced in any form without the prior permission in writing of BIS. This does not preclude the free use, in the course of implementing the standard, of necessary details, such as symbols and sizes, type or grade designations. Enquiries relating to copyright be addressed to the Director (Publications), BIS.

Review of Indian Standards

Amendments are issued to standards as the need arises on the basis of comments. Standards are also reviewed periodically; a standard along with amendments is reaffirmed when such review indicates that no changes are needed; if the review indicates that changes are needed, it is taken up for revision. Users of Indian Standards should ascertain that they are in possession of the latest amendments or edition by referring to the latest issue of 'BIS Catalogue' and 'Standards : Monthly Additions'.

This Indian Standard has been developed from Doc No.: WRD 09 (0646).

Amendments Issued Since Publication

Amend No.	Date of Issue	Text Affected

BUREAU OF INDIAN STANDARDS

Headquarters:

Manak Bhavan, 9 Bahadur Shah Zafar Marg, New Delhi 110002
Telephones : 2323 0131, 2323 3375, 2323 9402 *Website*: www.bis.org.in

Regional Offices:			*Telephones*
Central	:	Manak Bhavan, 9 Bahadur Shah Zafar Marg NEW DELHI 110002	2323 7617 2323 3841
Eastern	:	1/14 C.I.T. Scheme VII M, V. I. P. Road, Kankurgachi KOLKATA 700054	2337 8499, 2337 8561 2337 8626, 2337 9120
Northern	:	Plot No. 4-A, Sector 27-B, Madhya Marg, CHANDIGARH 160019	26 50206 265 0290
Southern	:	C.I.T. Campus, IV Cross Road, CHENNAI 600113	2254 1216, 2254 1442 2254 2519, 2254 2315
Western	:	Manakalaya, E9 MIDC, Marol, Andheri (East) MUMBAI 400093	2832 9295, 2832 7858 2832 7891, 2832 7892

Branches: AHMEDABAD. BENGALURU. BHOPAL. BHUBANESHWAR. COIMBATORE. DEHRADUN. DURGAPUR. FARIDABAD. GHAZIABAD. GUWAHATI. HYDERABAD. JAIPUR. JAMMU. JAMSHEDPUR. KOCHI. LUCKNOW. NAGPUR. PARWANOO. PATNA. PUNE. RAIPUR. RAJKOT. VISAKHAPATNAM.

Published by BIS, New Delhi