Free Standard provided by BIS via BSB Edge Private Limited to Apurv Bharadiya - (apurvbharadiya44@gmail.com) 106.194.49.41.

IS : 8826 - 1978
(Reaffirmed 2002)

Indian Standard

(Reaffirmed 2013)

(Reaffirmed 2020)

GUIDELINES FOR DESIGN OF LARGE EARTH AND ROCKFILL DAMS

(First Reprint MAY 1983)

UDC 627·824·04

© *Copyright* 1979

INDIAN STANDARDS INSTITUTION
MANAK BHAVAN, 9 BAHADUR SHAH ZAFAR MARG
NEW DELHI 110002

Gr 7 *January* 1979

Free Standard provided by BIS via BSB Edge Private Limited to Apurv Bharadiya - (apurvbharadiya44@gmail.com) 106.194.49.41.

Indian Standard

GUIDELINES FOR DESIGN OF LARGE EARTH AND ROCKFILL DAMS

Dam Sections (Non-overflow) Sectional Committee, BDC 53

Chairman	*Representing*
SHRI V. B. PATEL	Public Works Department, Government of Gujarat, Gandhinagar
Members	
SHRI R. N. BANSAL	Beas Designs Organization, Nangal Township
SHRI R. S. SACHDEVA (*Alternate*)	
DR M. C. CHATURVEDI	Indian Institute of Technology, New Delhi
CHIEF ENGINEER (CIVIL)	Kerala State Electricity Board, Trivandrum
CHIEF ENGINEER, MID	Public Works Department, Government of Andhra Pradesh, Hyderabad
SUPERINTENDING ENGINEER, CDO (*Alternate*)	
CHIEF ENGINEER (D&R)	Irrigation Works Department, Government of Punjab, Chandigarh
DIRECTOR (HW) (*Alternate*)	
CHIEF ENGINEER (P) & JOINT SECRETARY	Irrigation Department, Government of Maharashtra, Bombay
SUPERINTENDING ENGINEER (EARTH DAM), CDO (*Alternate*)	
DIRECTOR	Central Water & Power Research Station, Pune
DIRECTOR (E & RDD)	Central Water Commission, New Delhi
DEPUTY DIRECTOR (E & RDD) (*Alternate*)	
DR K. T. SUNDARARAJA IYENGAR	Indian Institute of Science, Bangalore
SHRI P J. JAGUS	Associated Cement Companies Ltd, Bombay
SHRI M. R. VINAYAKA (*Alternate*)	
SHRI Y. K. MEHTA	Concrete Association of India, Bombay
REPRESENTATIVE	Institution of Engineers (India), Calcutta
SHRI D. M. SAVUR	Hindustan Construction Co Ltd, Bombay
SHRI V. B. DESAI (*Alternate*)	
SECRETARY	Central Board of Irrigation and Power, New Delhi
UNDER SECRETARY (*Alternate*)	
SUPERINTENDING ENGINEER, CDO	Public Works Department, Government of Gujarat, Gandhinagar
EXECUTIVE ENGINEER, UNIT 'C', CDO (*Alternate*)	

(*Continued on page* 2)

© *Copyright* 1979
INDIAN STANDARDS INSTITUTION
This publication is protected under the *Indian Copyright Act* (XIV of 1957) and reproduction in whole or in part by any means except with written permission of the publisher shall be deemed to be an infringement of copyright under the said Act.

Free Standard provided by BIS via BSB Edge Private Limited to Apurv Bharadiya - (apurvbharadiya44@gmail.com) 106.194.49.41.

(*Continued from page* 1)

Members	*Representing*
SHRI P. K. VEDANAYAGAM	Public Works Department, Government of Tamil Nadu, Madras
SHRI D. AJITHA SIMHA, Director (Civ Engg)	Director General, ISI (*Ex-officio Member*)

Secretary

SHRI K. K. SHARMA
Assistant Director (Civ Engg), ISI

Earth and Rockfill Dams Subcommittee, BDC 53 : 2

Convener

DIRECTOR (E & RDD)	Central Water Commission, New Delhi

Members

DEPUTY DIRECTOR (E & RDD) [*Alternate to* Director (E & RDD)]	
SHRI R. N. BANSAL	Beas Designs Organization, Nangal Township
SHRI S. P. GUPTA (*Alternate*)	
DR M. C. CHATURVEDI	Indian Institute of Technology, New Delhi
CHIEF ENGINEER (P) & JOINT SECRETARY	Irrigation and Power Department, Government of Maharashtra, Bombay
SUPERINTENDING ENGINEER (EARTH DAM), CDO (*Alternate*)	
SHRI K. R. DATYE	In personal capacity (*No. 2, Rahem Mansion, Colaba Causeway, Bombay-400039*
SHRI HARI MOHAN	Irrigation Department, Government of Uttar Pradesh, Lucknow
SHRI L. P. BHARDWAJ (*Alternate*)	
SHRI T. K NATARAJAN	Central Road Research Institute, New Delhi
SUPERINTENDING ENGINEER, CDO	Public Works Department, Government of Gujarat, Gandhinagar
EXECUTIVE ENGINEER, UNIT 'B' CDO (*Alternate*)	

Panel for Design of Large Earth and Rockfill Dams, BDC 53 : P1

Convener

SHRI I. P. KAPILA	Irrigation Works Department, Government of Punjab, Chandigarh

Members

SHRI M. I. KAUSHAL	Beas Designs Organization, Nangal Township
DR J. PURUSHOTTAM	Public Works Department, Government of Andhra Pradesh, Hyderabad
SHRI S. N. Guru Rau	Central Water Commission, New Delhi
SHRI M. M SHAH	Public Works Department, Government of Gujarat, Gandhinagar
SHRI H. D. SHARMA	Irrigation Research Institute, Roorkee

Free Standard provided by BIS via BSB Edge Private Limited to Apurv Bharadiya - (apurvbharadiya44@gmail.com) 106.194.49.41.

Indian Standard

GUIDELINES FOR DESIGN OF LARGE EARTH AND ROCKFILL DAMS

0. FOREWORD

0.1 This Indian Standard was adopted by the Indian Standards Institution on 28 April 1978, after the draft finalized by Dam Sections (Non-overflow) Sectional Committee had been approved by the Civil Engineering Division Council.

0.2 With the advancement in the design and construction of large earth and rockfill dams on relatively unfavourable foundations, a number of river valley projects in the country require construction of earth and rockfill dams to achieve overall economy It is, therefore, considered necessary to provide guidelines for the design of such structures in the country.

0.3 In formulation of this standard, due weightage has been given to international co-ordination among the standards and practices prevailing in different countries in addition to those relating to the practices in the field in this country.

0.4 This standard deals with guidelines for design of large earth and rockfill dams. While dealing with various components of earth and rockfill dams, references have been made to the following Indian Standards which deal with some components of earth and rockfill dams independently.

IS : 1893-1975 Criteria for earthquake resistant design of structures (*third revision*)

IS : 2720 (Part XXXV)-1976 Methods of test for soils: Part XXXV Measurements of negative pore water pressure

IS : 4999-1968 Recommendations for grouting of pervious soils

IS : 5050-1968 Code of practice for design, construction and maintenance of relief wells

IS : 6066-1971 Recommendations for pressure grouting of rock foundations in river valley projects

IS : 6955-1973 Subsurface exploration of earth and rockfill dams

IS : 7356 (Part I)-1974 Code of practice for installation, maintenance and observation of instruments for pore pressure measurement in earth dams: Part I Porous tube type piezometers

Free Standard provided by BIS via BSB Edge Private Limited to Apurv Bharadiya - (apurvbharadiya44@gmail.com) 106.194.49.41.

IS : 7356 (Part II)-1976 Code of practice for installation, maintenance and observation of instruments for pore pressure measurement in earth dams: Part II Twin tube hydraulic piezometers

IS : 7436 (Part I)-1973 Guide for types of measurements for structures in river valley projects and criteria for choice and location of measuring instruments: Part I Earth and rockfill dams

IS : 7500-1974 Code of practice for installations and observation of cross arms for measurement of internal vertical movement in earth dams

IS : 7894-1975 Code of practice for stability analysis of earth dams

IS : 8237-1976 Code of practice for protection of slope for reservoir embankments

IS : 8414-1977 Guidelines for design of underseepage control measures for earth and rockfill dams

1. SCOPE

1.1 This standard lays down guidelines for design of large earth and rockfill dams.

2. TERMINOLOGY

2.0 For the purpose of this standard, the following definitions shall apply.

NOTE — For the definitions of terms pertaining to soil mechanics reference may be made to IS : 2809-1972*.

2.1 Borrow Area — The source of construction materials required for earth and rockfill dam.

2.2 Casing — All zones other than the core in a zoned earth dam, also called shell or shoulder.

2.3 Core — A zone of impervious earth within a zoned earth or rockfill dam.

2.4 Cut-Off — A barrier to reduce seepage of water through foundation and abutments.

2.4.1 *Full Cut-Off* — A cut-off taken to an impervious stratum.

2.4.1.1 *Positive cut-off* — A full cut-off in the form of an open excavated trench and back filled with compacted impervious material.

NOTE — Full cut-offs are also provided in the form of sheet piles, plastic diaphragm, concrete diaphragm, grouted cut-off, cut-off wall, etc.

2.4.2 *Partial Cut-Off* — A cut-off which does not go down to impervious stratum.

*Glossary of terms and symbols relating to soil engineering (*first revision*).

Free Standard provided by BIS via BSB Edge Private Limited to Apurv Bharadiya - (apurvbharadiya44@gmail.com) 106.194.49.41.

2.5 Freeboard — The vertical distance between the crest of the embankment (without camber) and the maximum reservoir water level.

2.6 Full Reservoir Level (FRL) — *See* IS : 5477 (Part I)-1969*.

2.7 Homogeneous Earth Dam — An earth dam composed of single type of material.

2.8 Horizontal Filter — A layer of uniform or graded pervious materials placed horizontally.

2.9 Impervious Blanket — An upstream impervious soil layer laid over a relatively pervious stratum and connected to the core.

2.10 Inclined/Vertical Filter — A layer of uniform or graded pervious materials, placed inclined or vertical.

2.11 Large Dams — Dams exceeding 15 m height above deepest bed level. Dams between 10 m and 15 m height may be treated as large dams, provided volume of earthwork exceeds 0·75 million m^3 or volume of storage exceeds 1 million m^3 or the maximum flood discharge exceeds 2 000 cumecs.

2.12 Lowest Water Level (LWL) or Minimum Drawdown Level (MDDL) — The lowest level to which a reservoir may be lowered keeping in view the requirements for hydro-power generation or irrigation and other needs.

2.13 Main Rockfill — A zone of dumped/compacted rockfill to provide structural support for the dam by its mass and internal stability against the water pressure of the reservoir.

2.14 Maximum Water Level (MWL) — *See* IS : 5477 (Part IV)-1971†.

2.15 Membrane — A thin impervious barrier provided, either on the upstream face or in the central portion of a rockfill dam, to prevent seepage through the dam.

2.16 Parapet Wall — A wall provided along the edge of the embankment.

2.17 Pore Pressure — The pressure developed in the fluid within the voids of the soil under external force when drainage is prevented.

2.18 Relief Well — *See* IS : 5050-1968‡.

2.19 Riprap — It is the protection to the embankment material against erosion due to wave action, velocity of flow, rain-wash, wind action, etc,

*Methods of fixing the capacities of reservoirs: Part I General requirements.
†Methods of fixing the capacities of reservoirs: Part IV Flood storage.
‡Code of practice for design, construction and maintenance of relief wells.

Free Standard provided by BIS via BSB Edge Private Limited to Apurv Bharadiya - (apurvbharadiya44@gmail.com) 106.194.49.41.

provided by placing a protection layer of rock fragments or manufactured material.

2.20 Rockfill Dam — An embankment consisting of variable sizes of rock to provide stability and an impervious core or membrane to provide water-tightness.

2.20.1 *Earth Core Type Rockfill Dam* — A rockfill dam composed of an internal core of rolled earthfill supported by shells of dumped/compacted rockfill on either side of the core. The core may be vertical or sloping upstream.

2.20.2 *Rockfill Dam with Upstream Membrane* — A dam composed of loose rock usually dumped/compacted in place, with an upstream impervious membrane of concrete or asphaltic concrete.

2.21 Rock Toe — A zone of free draining material provided at the toe of the dam.

2.22 Rubble Cushion — A zone of hand laid or derrick laid rock provided between the main rockfill and the upstream impervious membrane to act as a cushion to support the upstream membrane and equalize settlement.

2.23 Sudden Drawdown — The rate of lowering of reservoir water level which does not allow full dissipation of pore pressure simultaneously with the lowering of reservoir water level.

2.24 Toe Drain — A trench filled with filter material along the downstream toe of an earth dam to collect seepage from horizontal filter and lead it to natural drain.

2.25 Turfing — It is a cover of grass grown over an area to prevent erosion of soil particles by rain-wash.

2.26 Zoned Earth Dam — An earth dam composed of zones of different types of soil.

3. COMPONENTS OF EARTH AND ROCKFILL DAMS

3.1 Earth Dam

3.1.1 An earth dam generally consists of the following components (*see* Fig. 1A and 1B):

a) Cut-off,
b) Core,
c) Casing,
d) Internal drainage system,
e) Slope protection, and
f) Surface drainage.

Free Standard provided by BIS via BSB Edge Private Limited to Apurv Bharadiya -
(apurvbharadiya44@gmail.com) 106.194.49.41.

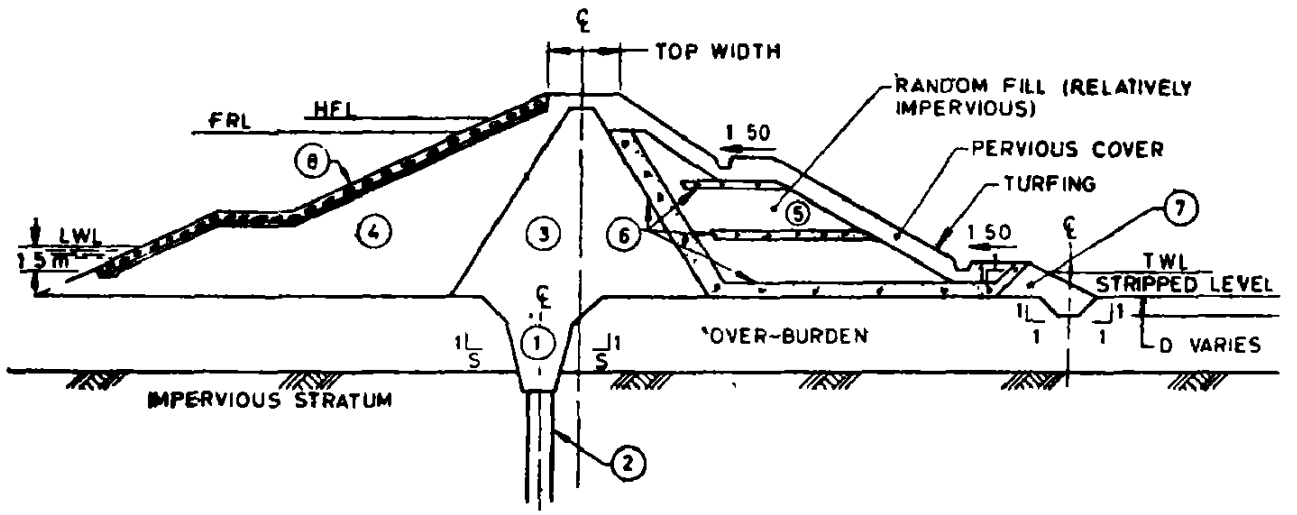

1. Positive cut-off
2. Grout curtain
3. Central impervious core
4. Upstream casing
5. Downstream casing
6. Inclined and horizontal filters
7. Rock toe and toe drain
8. Riprap with filter
9. Catch water drain

NOTE — Horizontal filters at intermediate levels are sometimes also placed in the upstream casing zone where casing material is of impervious nature.

1A EARTH DAM WITH CENTRAL CORE AND POSITIVE CUT-OFF

FIG. 1 COMPONENTS OF EARTH DAM — *Contd*

Free Standard provided by BIS via BSB Edge Private Limited to Apurv Bharadiya - (apurvbharadiya44@gmail.com) 106.194.49.41.

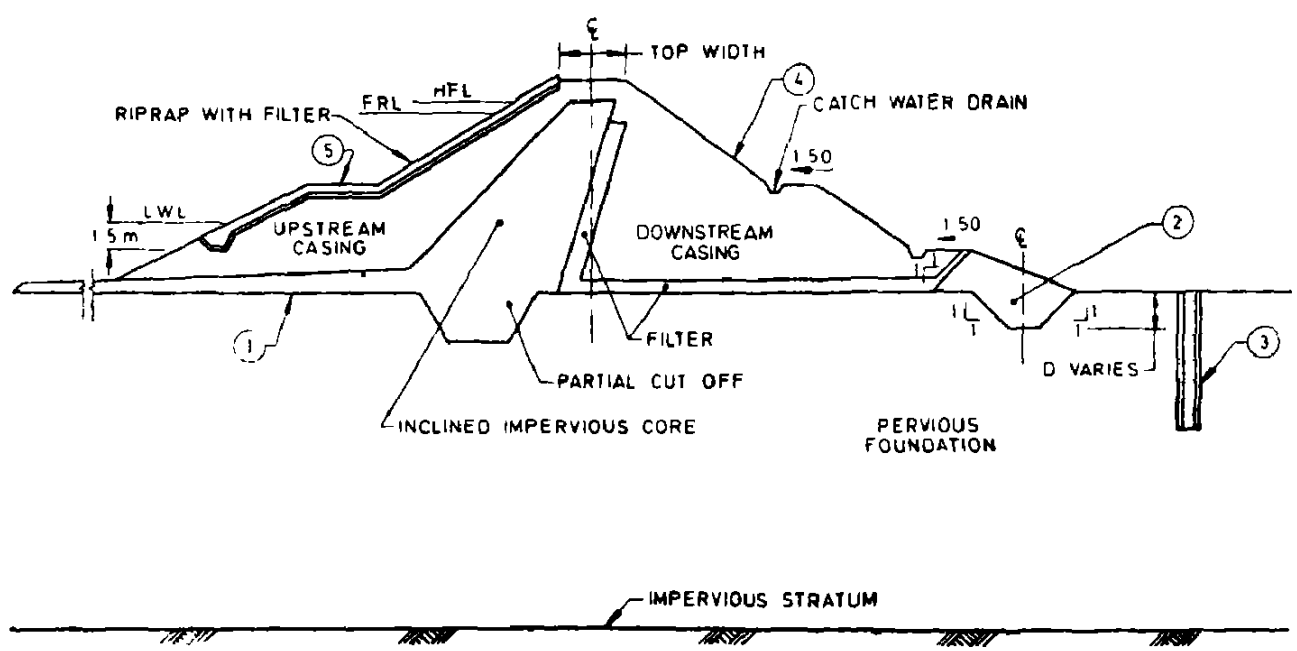

1. Impervious blanket
2. Rock toe and toe drain
3. Relief well
4. Turfing
5. Berm

1B EARTH DAM WITH INCLINED CORE AND PARTIAL CUT-OFF

FIG. 1 COMPONENTS OF EARTH DAM

Free Standard provided by BIS via BSB Edge Private Limited to Apurv Bharadiya - (apurvbharadiya44@gmail.com) 106.194.49.41.

3.1.2 The following components are provided in special cases:

a) Impervious blanket, and

b) Relief well.

3.2 Rockfill Dam

3.2.1 A rockfill dam generally consists of following components (*see* Fig. 2A and 2B):

a) Main rockfill,

b) 1) Upstream impervious membrane/zone

or

2) Internal core,

c) Rubble cushion, and

d) Cut-off wall.

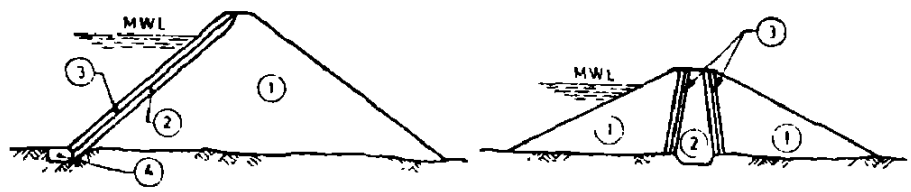

1. Main rockfill
2. Rubble cushion
3. Impervious membrane (Reinforced concrete or other types)
4. Cut off wall/plinth

2A ROCKFILL DAM WITH UPSTREAM IMPERVIOUS MEMBRANE

1. Main rockfill
2. Rolled earth core
3. Filters

2B EARTH CORE TYPE ROCKFILL DAM

FIG. 2 COMPONENTS OF ROCKFILL DAM

4. FUNCTIONS AND DESIGN REQUIREMENTS

4.0 The functions and design requirements of the components are described at **4.1** to **4.13**.

4.1 Cut-Off

4.1.1 The cut-off is required for the following functions:

a) To reduce loss of stored water through foundation and abutments, and

b) To prevent subsurface erosion by piping.

Free Standard provided by BIS via BSB Edge Private Limited to Apurv Bharadiya - (apurvbharadiya44@gmail.com) 106.194.49.41.

4.1.2 The type of cut-off should be decided on the basis of detailed geological investigation. It is desirable to provide a positive cut-off. Where this is not possible, other measures like a partial cut-off with upstream impervious blanket and pressure relief measures on the downstream may be provided.

4.1.3 Recommendations for location and size of cut-off are given at **4.1.3.1** to **4.1.3.5**.

4.1.3.1 The alignment of the cut-off trench should be fixed in such a way that its central line should be within the upstream base of the impervious core and it should be keyed into rock or continuous impervious strata.

4.1.3.2 The bottom width of cut-off trench may be fixed taking following factors into consideration:

a) Provide sufficient working space for compaction equipments,

b) Provide sufficient working space to carry out curtain grouting, and

c) Provide safety against piping.

A minimum width of 4 m is recommended. A bottom width of 10 percent to 30 percent of hydraulic head may be provided to satisfy requirements of piping. This may be suitably increased to satisfy other requirements of mechanical equipments and curtain grouting. The side slopes depend upon substrata. Side slopes of at least 1 : 1 or flatter may be provided in case of overburden, while 1/2 : 1 and 1/4 : 1 may be provided in soft rock and hard rock respectively.

4.1.3.3 The positive cut-off should be taken at least one metre into continuous impervious substratum.

4.1.3.4 The partial cut-off is specially suited for horizontally stratified foundations with relatively more pervious layer near top. The depth of the partial cut-off in deep pervious alluvium will be governed by:

a) permeability of substrata, and

b) relative economics of depth of excavation governed usually by cost of dewatering *versus* length of upstream impervious blanket.

4.1.3.5 The cut-off in the flanks on either side should normally extend up to the top of impervious core, particularly in case of steep abutments.

4.1.4 Necessity of grouting below the bed of cut-off trench will arise if the cut-off trench is terminated in rock formation and the rock is weathered or having cracks, joints and crevices. Necessity of grouting may be decided, based on percolation tests. Rock having a lugeon value of more than 5 should be grouted so as to bring post-grouting lugeon value

Free Standard provided by BIS via BSB Edge Private Limited to Apurv Bharadiya - (apurvbharadiya44@gmail.com) 106.194.49.41.

of about 5 lugeons. The depth of grouting is determined by percolation tests in stages of 4 to 5 m each and determining necessity of grouting in each stage. The depth of grouting does not normally exceed half the head of water.

4.1.5 The necessity of grouting below the bed in case of partial cut-off trench will be governed by the cost and effectiveness of the grout curtain *vis-a-vis* the value of water loss through seepage below and beyond the partial cut-off trench. Alluvial strata having permeability in excess of 10^{-2} cm/s shall be treated thoroughly by grouting with a suitable material. Strata of permeability between 10^{-2} cm/s and 10^{-3} cm/s may be treated to reduce the permeability to the extent possible. The grouting of strata having permeability less than 10^{-3} cm/s will be difficult, expensive and time consuming (*see* IS : 4999-1968*).

4.1.5.1 The depth of grout curtain depends upon the depth at which the impervious substrata is met. If the impervious stratum is available at reasonable depth, the grout curtain should be extended to that depth. Otherwise the grout curtain should extend to a depth depending on percentage reduction in seepage desired.

4.1.5.2 At the abutment contacts of the cut-off trench, care should be taken to avoid seepage by outflanking.

4.1.6 The backfill material for cut-off trench shall have same properties as those prescribed for the impervious core at **4.2.1**.

4.2 Core

4.2.1 The core provides impermeable barrier within the body of the dam. Impervious soils are generally suitable for core. However, soils having high compressibility and liquid limit are not suitable as they are prone to swelling and formation of cracks. Soils having organic content are also not suitable. IS : 1498-1970† may be referred for suitability of soils for core. Appendix A gives recommendations based on IS : 1498-1970†. Recommendations regarding suitability of soils for construction of core for earth dams in earthquake zones are given in Appendix B.

4.2.2 Core may be located either centrally or inclined upstream. The location will depend mainly on the availability of materials, topography of site, foundation conditions, diversion considerations, etc. The main advantage of a central core is that it provides higher pressures at the contact between the core and the foundation reducing the possibility of leakage and piping. On the other hand inclined core reduces the pore

*Recommendations for grouting of pervious soils.

†Classification and identification of soils for general engineering purposes (*first revision*).

Free Standard provided by BIS via BSB Edge Private Limited to Apurv Bharadiya - (apurvbharadiya44@gmail.com) 106.194.49.41.

pressures in the downstream part of the dam and thereby increases its safety. It also permits construction of downstream casing ahead of the core. The section with inclined core allows the use of relatively large volume of random material on the downstream.

4.2.3 The following practical considerations govern the thickness of the core:

a) Availability of suitable impervious material;
b) Resistance to piping;
c) Permissible seepage through the dam; and
d) Availability of other materials for casing, filter, etc.

However, the minimum top width of the core should be 3·0 m.

4.2.4 The top level of the core should be fixed at least 1 metre above the maximum water level to prevent seepage by capillary syphoning.

4.3 Casing

4.3.1 The function of casing is to impart stability and protect the core. The relatively pervious materials, which are not subject to cracking on direct exposure to atmosphere, are suitable for casing. IS : 1498-1970* may be referred for suitability of soils for casing. Appendix A gives recommendations based on IS : 1498-1970*.

4.4 Internal Drainage System

4.4.1 Internal drainage system comprises inclined filter, horizontal filter, rock toe, toe drain, etc.

4.4.2 *Inclined or Vertical Filter* — Inclined or vertical filter abutting the outer slope of the impervious core is provided mainly to collect seepage emerging out of the core and thereby keeping the downstream casing relatively dry.

4.4.3 *Horizontal Filter* — Horizontal filter collects the seepage from the inclined or vertical filter or from body of the dam and carries the seepage to the toe drain.

4.4.4 *Rock Toe* — The main functions of rock toe are to facilitate drainage of seepage water and to protect the lower part of the downstream slope from tail water erosion.

4.4.5 *Toe Drain* — The toe drain is provided at the downstream toe of the earth dam to collect seepage from horizontal filter and to discharge the same away from the dam by suitable means according to site conditions.

*Classification and identification of soils for general engineering purposes (*first revision*).

Free Standard provided by BIS via BSB Edge Private Limited to Apurv Bharadiya - (apurvbharadiya44@gmail.com) 106.194.49.41.

4.4.6 For design of components of the internal drainage system, 'Indian Standard drainage systems for earth and rockfill dams' (*under preparation*) may be referred.

4.5 Slope Protection

4.5.1 *Upstream Slope* — The upstream slope protection is ensured by providing riprap. For design of riprap IS : 8237-1976* may be referred.

4.5.2 *Downstream Slope* — The downstream slope protection is ensured by providing riprap or turfing. It is a usual practice to protect the downstream slope from rain cuts by providing suitable turfing on entire slope. For details of downstream slope protection, IS : 8237-1976* may be referred.

4.6 Surface Drainage — For surface drainage of downstream slope of dam, reference may be made to IS : 8237-1976*.

4.7 Impervious Blanket

4.7.1 The horizontal upstream impervious blanket is provided to increase the path of seepage when full cut-off is not practicable on pervious foundations. The impervious blanket may be provided either with or without partial cut-off. It necessitates the provision of relief wells near downstream toe of the dam to reduce uplift pressure. Impervious blanket shall be connected to core of the dam, as shown in Fig. 1B.

4.7.2 The material used for impervious blanket should have far less permeability than the foundation soil. To avoid formation of cracks the material should not be highly plastic. Reference may be made to IS : 1498-1970† for suitability of soils for blanket. Appendix A gives recommendations based on IS : 1498-1970†. A 30-cm thick layer of random material over the blanket is recommended to prevent cracking during exposure to atmosphere.

4.7.3 The impervious blanket may be designed in accordance with IS : 8414-1977‡.

4.7.4 The length of path of under-seepage along the upstream impervious blanket and the partial cut-off should be such that it provides adequate factor of safety to critical value of exit gradient at the downstream toe so as to prevent undermining of subsoil. Properly graded inverted filter should be provided for protection against piping action at

*Code of practice for protection of slope for reservoir embankments.

†Classification and identification of soils for general engineering purposes (*first revision*).

‡Guidelines for design of underseepage control measures for earth and rockfill dams.

Free Standard provided by BIS via BSB Edge Private Limited to Apurv Bharadiya - (apurvbharadiya44@gmail.com) 106.194.49.41.

the downstream of core. This permits free movement of water but prevents the movement of subsoil particles.

4.8 Relief Wells — Relief wells (Fig. 1B) are generally provided downstream of partial cut-off to relieve excess hydrostatic pressure. For details of relief wells, reference may be made to IS : 5050-1968*. Relief wells are also provided as adjunct to grouted cut-off to take care of possible seepage.

4.9 Main Rockfill

4.9.1 The function of the main rockfill (*see* Fig. 2A and 2B) is to provide structural support to the impervious upstream membrane or core and to provide stability against the water pressure from the reservoir.

4.9.2 Settlement of rockfill takes place in the following two stages:

a) During construction, and

b) After the reservoir is filled.

4.9.2.1 Horizontal movement of rockfill also takes place on filling of reservoir and like vertical settlement it continues over a long time, at a continuously decreasing rate. The settlement of the compacted rockfill after placing the rubble cushion and the impervious facing is generally of the order of 1 percent of the height.

4.10 Upstream Impervious Membrane

4.10.1 The impervious membrane is placed on the upstream face of the dam (Fig. 2A). It has following advantages as compared to earth core:

a) The dam with upstream membrane has a greater margin of safety against shear failure because of (1) low pore pressures in rockfill, (2) larger rockfill mass to resist water pressure, and (3) water pressure having larger downward component;

b) The pervious rock embankment developes no uplift as it permits free percolation of water upward from the foundation;

c) The upstream membrane is exposed for inspection and repairs;

d) The dam can be raised by dumping rock on the downstream side and then extending the membrane upward on the sloping surface;

e) The upstream membrane permits grouting of the rock below cut-off wall at the upstream toe while the embankment is being constructed; and

f) The dam has comparatively lesser volume of fill.

4.10.2 *Types of Upstream Impervious Membrane* — The upstream impervious membrane may be of reinforced concrete, asphaltic concrete, etc.

*Code of practice for design, construction and maintenance of relief wells.

Free Standard provided by BIS via BSB Edge Private Limited to Apurv Bharadiya - (apurvbharadiya44@gmail.com) 106.194.49.41.

4.10.2.1 *Reinforced concrete membrane* — The reinforced concrete membrane on the upstream face of a rockfill dam is the most common type because of its durability and ease of construction. The joints between the slabs may be 25 to 50 mm wide in horizontal direction and 50 to 75 mm wide in vertical direction. Horizontal joints should be avoided as far as possible. The joints should be filled with a plastic or compressible material to keep out dirt. Water stops should be used for watertightness. The thickness of concrete slab should be about one percent of the head of water with a minimum thickness of 30 cm. The reinforcement should be provided in both directions and equal to about 0·5 percent of concrete area. For 30 cm thick slab, reinforcement should be provided in one layer and for thicker slabs, two layers may be provided.

4.10.2.2 *Asphaltic concrete membrane* — The asphaltic concrete membrane is widely used because it is cheaper than concrete. It is more flexible than concrete slab and it can be constructed rapidly. It is easier to repair than concrete in the portion above reservoir water level. The main disadvantage of this type of membrane is that the material is relatively soft and is more easily damaged than concrete. The asphaltic concrete should generally consist of well graded aggregates with about 10 percent of filler material passing through 75-micron IS sieve. Pure asphalt binder of about 8 to 10 percent by mass of aggregate should be used. The material should be mixed and compacted hot. An air content of 2 to 3 percent is optimum. The following two types of asphaltic membrane are used:

a) Laminated type consisting of rubble masonry transition over rockfill, then a layer of porous concrete, overlaid with a layer of asphaltic concrete, placed in two layers and rolled. Finally, a layer of reinforced concrete is provided as protective and insulating cover; and

b) A purely asphaltic concrete paving with thickness about 1 percent of the head of water with a minimum thickness of 30 cm. It is placed in layers and rolled.

4.11 Rubble Cushion – A dry rubble layer between the main rockfill and the upstream impervious membrane is provided with hand laid or derrick laid rock to act as a cushion for equalizing settlement and providing an even surface for laying the upstream membrane. The rubble cushion layer (Fig. 2A) should be carefully laid with large voids chinked with spalls. The rubble cushion transmits and distributes the water load from the impervious facing to the main rockfill. Generally the rubble cushion is thicker at bottom than at top. However, it should have sufficient horizontal width to permit the movement of caterpillar cranes or the setting up of derricks. A minimum thickness of 3 m normal to the slope is

Free Standard provided by BIS via BSB Edge Private Limited to Apurv Bharadiya - (apurvbharadiya44@gmail.com) 106.194.49.41.

desirable. If the upstream face is to be provided steeper, a thicker rubble cushion layer may be provided as it has to retain the loose rockfill behind it.

4.12 Cut-Off Wall

4.12.1 Cut-off wall is also called ' plinth '. It is provided near upstream toe of a membrane rockfill dam (Fig. 2A) to provide watertight connection between membrane and foundation. The dimensions of cut-off wall/plinth are based on following requirements.

a) The contact length on foundation should be adequate to provide a minimum seepage path, for example, one-twentieth to one-tenth of head of water, but not less than 3 m, depending on rock quality;

b) It should serve as a cap for consolidation or curtain grouting;

c) It should provide surface to facilitate membrane form walk; and

d) It should provide at least 1 m rockfill under membrane to permit the membrane to deflect normal to its face.

4.13 Earth Core — Earth core, either vertical or inclined upstream, forms an impervious barrier in an earth core type rockfill dam (Fig. 2B). This type of core needs special attention at the contact of rockfill by way of providing filter layers between the earth core and rockfill. The suitability of material is the same as in case of core of earth dam given at **4.2.**

5. BASIC DESIGN REQUIREMENTS

5.1 Earth Dam — The basic requirements for design of earth dam are to ensure (a) safety against overtopping, (b) stability, and (c) safety against internal erosion.

5.1.1 *Overtopping* — Sufficient spillway and outlet capacity should be provided to prevent overtopping of earth embankment during and after construction The freeboard should be sufficient to prevent overtopping by waves and should take into account the settlement of embankment and foundation.

5.1.1.1 Freeboard for wave run up on slope shall be provided in accordance with the provisions contained in ' Indian Standard recommendations for freeboard requirements in earth dams ' (*under preparation*).

5.1.1.2 Analysis should be made for computing the settlement of the embankment and of the foundations in order to determine extra freeboard to be provided as settlement allowance. For unyielding foundation, the amount of settlement for the embankment should be restricted to 1 percent of the height of dam. For compressible foundations, the settlement should

Free Standard provided by BIS via BSB Edge Private Limited to Apurv Bharadiya - (apurvbharadiya44@gmail.com) 106.194.49.41.

be computed based on laboratory test results and should be provided for by increasing the height of dam correspondingly. Longitudinal camber should be provided on the top of dam along the dam axis to provide for settlement. The camber varies from zero height at the abutments to maximum at the central section in the valley where maximum settlement is anticipated.

5.1.2 *Stability Analysis* — The slopes of the embankment shall be stable under all loading conditions. They should also be flat enough so as not to impose excessive stresses on foundation. Embankment slopes shall be designed in accordance with the provisions contained in IS : 7894-1975*. The upstream slope shall be protected against erosion by wave action and the crest and downstream slope shall be protected against erosion due to wind and rain.

5.1.3 *Seepage Control* — The seepage through the embankment and foundation should be such as to control piping, erosion, sloughing and excessive loss of water. Seepage control measures are required to control seepage through dam and seepage through foundation. Design for control of seepage through dam shall be made in accordance with provisions contained in 'Indian Standard drainage systems for earth and rockfill dams' (*under preparation*). Design for control of seepage through foundation may be made in accordance with provisions contained in IS : 8414-1977†.

5.2 Rockfill Dam — The basic requirements for design of rockfill dam are essentially same as described in **5.1** for earth dam. However, the slopes shall be designed in accordance with 'Indian Standard code of practice for stability analysis of rockfill dams' (*under preparation*).

6. SPECIAL DESIGN REQUIREMENTS

6.0 In addition to basic design requirements given at **5**, the following special design requirements, should also be satisfied for both earth and rockfill dams:

a) Control of cracking,

b) Stability in earthquake regions, and

c) Stability at junctions.

6.1 Control of Cracking — Cracking of impervious zone results into a failure of an earth dam by erosion, piping, breaching, etc. Due consideration to cracking phenomenon shall, therefore, be given in the design of earth dam.

*Code of practice for stability analysis of earth dams.

†Guidelines for design of underseepage control measures for earth and rockfill dams.

Free Standard provided by BIS via BSB Edge Private Limited to Apurv Bharadiya - (apurvbharadiya44@gmail.com) 106.194.49.41.

6.1.1 *Reasons of Cracking* — Cracking in the core of earth or rockfill dam occurs due to foundation settlement and/or differential movements within the embankment. Differential movements in the embankment take place due to the following reasons:

a) Unsuitable and/or poorly compacted fill materials,

b) Different compressibility and stress-strain characteristics of the various fill materials, and

c) Variation in thickness of fill over irregularly shaped or steeply inclined abutments.

6.1.1.1 Cracking also develops by tensile strains caused by various loads, such as dead load of the structure, filling of the reservoir and seismic forces. Hydraulic fracturing of the core may also occur when the hydrostatic pressure at a section in the core exceeds the total minor principal stress at that section.

6.1.2 *Types of Cracks* — Cracks may be classified based on the following factors:

a) Mechanism by which cracks are developed, such as tensile, compressive, shrinkage or shearing.

b) Types of surface with which the cracking is associated, such as flat or steep.

c) Physical process involved, such as moisture or temperature changes, loading or unloading action and dynamic activity, such as blasting or earthquakes.

6.1.2.1 Tensile stresses produce cracks on flat surface by capillary action in the moisture range just below saturation. Tensile stress steep slope category cracks are associated with slumping in poorly consolidated materials.

6.1.2.2 Shrinkage cracks are produced by wetting and drying action in the moisture range of plasticity index.

6.1.2.3 Compression cracks on flat surface are produced by an abrupt change in moisture followed by substantial consolidation and cracking around the periphery of the affected area.

6.1.2.4 Cracking associated with shearing is commonly associated with steep slopes. There are two conditions in this category. One is differential settlement which involves a limited range of motion and the other is a slide failure which may involve any amount of motion. The differential settlement condition commonly involves a structure extending over two or more kinds of foundation with differing compressive characteristics or a differential loading condition on a single kind of foundation material.

Free Standard provided by BIS via BSB Edge Private Limited to Apurv Bharadiya - (apurvbharadiya44@gmail.com) 106.194.49.41.

6.1.2.5 Slide failures may be associated with loading, unloading or moisture change, the distinguishing characteristic is the potential for continued movement.

6.1.3 *Importance of Cracks* — Relative importance of each type of crack category or group is given at **6.1.3.1** to **6.1.3.3**.

6.1.3.1 Where permeability and possible erosion are of primary concern, the tension group is potentially the most serious. In this group, the cracks are open and although usually only superficial, those associated with steep slopes may extend to depths comparable to the size of structure involved. Though the development of this type of cracking is from the surface, it may persist, although deeply buried, where eventually it may contribute to unsatisfactory seepage action.

6.1.3.2 Where maintenance of position is a prime structural requirement the compression type of cracking is the most important because it is probable that when this type of cracking appears the settlement has already completed.

6.1.3.3 Shearing cracks are identified primarily by displacement between the two sides and a tearing configuration. Unlike tension or compression cracking, shearing cracks commonly occur early in the failure action and further movement can be expected after the first cracking shows up.

6.1.4 *Measures for Control of Cracking* — Following measures are recommended for control of cracking:

a) Use of plastic clay core and rolling the core material at slightly more than optimum moisture content. In case of less plastic clay, 2 to 5 percent bentonite of 200 to 300 liquid limit may be mixed to increase the plasticity.

b) Use of wider core to reduce the possibility of transverse or horizontal cracks extending through it.

c) Careful selection of fill materials to reduce the differential movement. To restrict the rockfill in lightly loaded outer casings and to use well graded materials in the inner casings on either side of the core.

d) Wide transition zones of properly graded filters of adequate width for handling drainage, if cracks develope.

e) Special treatment, such as preloading, presaturation, removal of weak material, etc, to the foundation and abutment, if warranted.

f) Delaying placement of core material in the crack region till most of the settlement takes place.

Free Standard provided by BIS via BSB Edge Private Limited to Apurv Bharadiya - (apurvbharadiya44@gmail.com) 106.194.49.41.

g) Arching the dam horizontally between steep abutments.

h) Flattening the downstream slope to increase slope stability in the event of saturation from crack leakage.

j) Cutting back of steep abutment slopes.

6.2 Stability in Earthquake Zones — Dams situated in earthquake zones are likely to be subjected to additional stresses and deformation on account of earth acceleration. This needs a special treatment. Following are the principal additional factors to be considered while designing an earth dam in earthquake zones:

a) The stability of the slopes of the embankment under the extra forces set up by the lateral and vertical accelerations.

b) The settlement of loose or poorly compacted fill or foundation material leading to loss of freeboard and thereby possible overtopping.

c) The cracking of the impervious fill leading to possible failure by piping.

d) Liquefaction of deposits of loose sand in the foundation of the dam, causing cracking, sliding or actual horizontal movement of the dam.

6.2.1 Following measures are recommended against the factors listed in **6.2**:

a) The stability analysis of slopes with earthquake considerations shall be carried out in accordance with the provisions contained in IS : 7894-1975*.

b) Additional freeboard shall be provided to avoid possible overtopping due to settlement of embankment or foundation or both during an earthquake.

c) The measures recommended for control of cracking under **6.1.4** shall be adopted. In addition, provisions shall be made for discharging the maximum anticipated leakage rapidly. For this purpose, downstream zones of large quarried rock or screened gravels and cobbles are recommended. The impervious core should be made thicker for resisting the piping action. The top of the dam should be made thicker by increasing the crest width or by using flatter slopes at the top than would be required in non-seismic regions, so as to increase the path of seepage through cracks.

d) The foundation should be as compact as possible. All loose and soft material should be excavated and removed, if possible, or recompacted.

*Code of practice for stability analysis of earth dams.

Free Standard provided by BIS via BSB Edge Private Limited to Apurv Bharadiya - (apurvbharadiya44@gmail.com) 106.194.49.41.

6.3 Stability at Junctions — Junctions of earthwork with foundation, abutments, masonry structures like overflow and non-overflow dams and outlets need special attention with reference to one or all of the following criteria:

a) Good bond between earthwork and foundation,

b) Adequate creep length at the contact plane,

c) Protection of earth dam slope against scouring action, and

d) Easy movement of traffic.

6.3.1 *Junction with Foundations* — Earth dams may be founded on soil overburden or rock. For foundations on soils or non-rocky strata, vegetation like bushes, grass roots, trees, etc, should be completely removed. The soil containing organic material or dissoluble salt, should also be completely removed. After removal of these materials, the foundation surface should be moistened to the required extent and adequately rolled before placing embankment material. For rocky foundation, the surface should be cleaned of all loose fragments including semi-detached and overhanging surface blocks of rock. Proper bond should be established between the embankment and the rock surface so prepared.

6.3.2 *Junction with Abutments* — The rocky abutments should be suitably shaped and prepared in order to get good contact between the impervious core of the embankment and the rock. Overhangs, if any, should be removed. Vertical surfaces should be excavated to form moderate slopes, not less than 1 in 4 to 1 in 5. A wider impervious zone and thicker transitions are also provided sometimes at the abutment contacts to increase the length of path of seepage and to protect against erosion.

6.3.2.1 The bond between rocky or non-rocky abutments should be established as in **6.3.1**. In addition, sufficient creep length should be provided between impervious section of the dam and the abutment, so as to provide safety against piping. The creep length should be not less than 4 times the hydraulic head.

6.3.3 *Junction with Non-overflow Dam* — Junction of non-overflow masonry/concrete dam with earth dam is provided by suitable key taken sufficiently inside the earth dam. The length of key depends on creep length. The bond between the key and the earthwork should be established by proper compaction of contact layers. Sometimes these contact layers are mixed with 2 to 5 percent bentonite with liquid limit of 200 to 300 to cause expansion and hence to have tight joints. Sometimes the junction of earth dam with non-overflow dam is provided with earth retaining walls perpendicular or skew at the junction of non-overflow dam with the overflow dam. Such retaining walls shorten the length of non-overflow dam (transition length), but they themselves add to the cost.

Free Standard provided by BIS via BSB Edge Private Limited to Apurv Bharadiya - (apurvbharadiya44@gmail.com) 106.194.49.41.

The alignment of the dam and the junction may sometimes have to be modified to suit smooth transition of road on top of dam from non-overflow section to earth dam section.

6.3.4 *Junction with Outlets* — Proper bond should be provided between the earthwork and the outlet walls by providing staunching rings at intervals so as to increase the path of percolation along the contact by 20 to 30 percent.

7. SELECTION OF DAM SECTION

7.1 Earth Dam — No single type of cross section of earth dam is suited for all site conditions. The adoption of the particular type of embankment section depends upon the following factors:

a) Availability of the suitable local material in sufficient quantity within reasonable range;

b) Foundation conditions and cut-off requirements;

c) Types of earth moving machinery;

d) Diversion considerations and construction schedule;

e) Climatic conditions in relation to placement moisture content control. subsequent moisture content changes, etc; and

f) Safety with respect to stability and seepage.

7.1.1 *Zoning* — If only one type of suitable material is readily availabl nearby, a homogeneous section is generally preferred. If the materi available is impervious or semi-pervious, a small amount of pervious material is required as casing for protection against cracking. On the other hand, if it is pervious, a thin impervious membrane is required as core to form the water barrier.

7.1.1.1 A zoned dam is, however, preferred where different types of soils are available from borrow area. It also facilitates the use of compulsory excavation from foundation, approach channel, tail channel, etc. The zoned earth dam is generally composed of an impervious core bounded by transitions and/or outer casing of pervious material. In zoned earth dam, the weaker materials are often utilized most economically in the form of random zones. Random zones are generally provided below minimum drawdown level on upstream side and on downstream of inclined filter When the random zone is of relatively impervious material, horizontal filters at different elevations on upstream and downstream are provided (*see* Fig. 1A).

7.1.1.2 The zoning of earth dam as planned in the design may have to be altered or modified during execution stage in view of the following:

a) The materials estimated are not available according to requirement;

Free Standard provided by BIS via BSB Edge Private Limited to Apurv Bharadiya - (apurvbharadiya44@gmail.com) 106.194.49.41.

b) Different types of material encountered, which could not be ascertained during investigations;

c) Construction difficulties;

d) Construction schedule; and

e) New foundation features.

7.1.2 *Top Width* — The width of the dam at the crest should be fixed according to the working space required at the top. No dam should have a crest width of less than 6 m.

7.1.3 *Settlement Allowance* — At the end of construction, the crest of the dam should be suitably raised above the designed top level of the dam to allow for post-construction vertical deformation resulting from compression and/or settlement of the embankment and foundation so that there may be no reduction in the designed freeboard above the maximum reservoir level This extra height of the dam is provided in the form of a longitudinal camber over the designed top level, varying from zero at the abutments to a maximum value at the centre of gorge where the dam will be the highest and the settlement of the embankment will be the most. The extra height to be so provided to compensate for compression in the fill material should generally be between 0 2 percent and 0·4 percent of the embankment height, depending on the soil type, in respect of earth embankments and rockfill dams where the material is placed in layers and compacted with the addition of water. The deformation on account of compression in the embankment would be greater in the case of dumped rockfill. Generally, a provision of 1 to 2 percent of the embankment height above the designed top level may be provided to account for both embankment compression and foundation settlement in respect of earth and rockfill dams.

7.1.4 *Berms* — Berms have the following purposes:

a) To break the continuity of the slopes thereby reducing surface erosion in case of downstream slope,

b) To provide level surfaces for construction and maintenance operations, and

c) To prevent undermining of the lower edge of the riprap in case of upstream slope.

7.1.4.1 The berm should slope towards the inner edge to prevent rain-water from flowing over the outer edge and down the slope of dam. A slope of 1 in 50 is recommended for this purpose. A minimum berm width of 3 0 m is recommended. However, 5 to 6 m width is desirable. One berm for every vertical elevation of about 10 to 15 m is recommended. A berm is also desirable at elevation of top of rock toe.

Free Standard provided by BIS via BSB Edge Private Limited to Apurv Bharadiya - (apurvbharadiya44@gmail.com) 106.194.49.41.

7.2 Rockfill Dam

7.2.1 *Zoning* — The rockfill embankment mainly comprises impervious membrane for watertightness and supporting rockfill. Adoption of a particular type of rockfill dam is generally governed by considering the merits and demerits of each type with reference to a particular site. Separation of rockfill zone into several different zones and specifying different gradation for each zone is considerably expensive in processing of the rock to meet the requirements. Usually, it will be satisfactory to use quarry run rock in the entire rockfill zone so as to produce reasonably uniform rock embankment with free drainage characteristics.

7.2.2 *Top Width* — The criteria for top width are same as those for earth dam as described in **7.1.2**.

7.2.3 *Crest Height* — The criteria for fixing crest height are same as those for earth dam as described in **7.1.3**.

8. CHOICE OF CONSTRUCTION MATERIAL

8.1 Earth Dam — Because of huge quantities of material involved in construction of earth dam, the material must come from borrow areas and quarries close to the site. The earth dam may be designed as a homogeneous one or zoned type depending upon the qualities and quantities of the various materials available from the borrow areas and foundations. To economize the design, even erratic material that cannot be relied upon to have the consistent minimum properties needed for any zone can be utilized in random zones. It is a general practice to utilize the materials available in their natural state rather than to improve the properties of the materials by blending, mixing, screening, washing, etc. The designer should aim at maximum utilization of the material available from compulsory excavations.

8.1.1 The soils available from the borrow areas and excavation shall be identified and classified in accordance with IS : 1498-1970*.

8.1.2 Suitability of soils for construction of earth dam in accordance with IS : 1498-1970* are given in Appendix A for general guidance of the designer. These values should not be adopted as such in any given case. Recommendations regarding suitability of soils for construction of core in earthquake zones are given in Appendix B.

8.2 Rockfill Dam — The rock for main rockfill should be hard, sound and durable so as to resist excessive breakdown during handling and placing operations. In general, unweathered igneous and metamorphic rocks are suitable for rockfill, while sedimentary rocks are not desirable. Shales which slake in the presence of air and rocks which shatter into very small pieces or have high percentage of chips or dust are not suitable. The

*Classification and identification of soils for general engineering purposes (*first revision*)

Free Standard provided by BIS via BSB Edge Private Limited to Apurv Bharadiya - (apurvbharadiya44@gmail.com) 106.194.49.41.

chips and dust should not be more than 10 percent. The angular bulky rocks are preferred as against flat elongated rocks or rounded boulders. If rounded cobbles or boulders are used, they should be scattered throughout the rockfill and not concentrated in pockets.

8.2.1 Impervious material suitable for core of earth dam is also suitable for core of rockfill dam (*see* Appendix A).

8.2.2 The choice of material for rigid membranes is given in **4.10.2.**

9. INSTRUMENTATION

9.1 Earth Dams — For instrumentation in earth dams, the Indian Standards mentioned in **0.4** and report of CW and PC, instrumentation committee mentioned below may be referred:

> 'Report of the Committee on Instrumentation for Dams and Hydraulic Structures, Part I and Part II. Ministry of Irrigation and Power, Government of India, New Delhi; December 1965 '.

9.2 Rockfill Dams — Instruments to measure vertical and horizontal movements of the rockfill and pore pressures in earth core may be provided. For details IS : 7436 (Part I)-1973* may be referred.

APPENDIX A

(*Clauses* 4.2.1, 4.3.1, 4.7.2, 8.1.2 *and* 8 2.1)

SUITABILITY OF SOILS FOR CONSTRUCTION OF EARTH DAMS

Relative Suitability	*Homogeneous Dykes*	*Zoned Earth Dam*		*Impervious Blanket*
		Impervious Core	Pervious Casing	
Very suitable	GC	GC	SW, GW	GC
Suitable	CL, CI	CL, CI	GM	CL, CI
Fairly suitable	SP, SM, CH	GM, GC, SM, SC, CH	SP, GP	CH, SM, SC, GC
Poor	—	ML, MI, MH	—	—
Not suitable	—	OL, OI, OH Pt	—	—

NOTE — Refer IS : 1498-1970†.

*Guide for types of measurement for structures in river valley projects and criteria for choice and location of measuring instruments: Part I Earth and rockfill dams.

†Classification and identification of soils for general engineering purposes (*first revision*).

Free Standard provided by BIS via BSB Edge Private Limited to Apurv Bharadiya - (apurvbharadiya44@gmail.com) 106.194.49.41.

APPENDIX B

(*Clauses* 4.2.1 *and* 8.1.2)

SUITABILITY OF SOILS FOR CONSTRUCTION OF CORE OF EARTH DAM IN EARTHQUAKE ZONES

Sl No.	*Relative Suitability*	*Type of Soil*
1.	Very good	Very well graded coarse mixtures of sand, gravel and fines, D_{85} coarser than 50 mm, D_{50} coarser than 6 mm. If fines are cohesionless, not more than 20 percent finer than 75 micron IS Sieve.
2.	Good	a) Well graded mixture of sand, gravel and clayey fines, D_{85} coarser than 25 mm. Fines consisting of inorganic clay (CL with plasticity index greater than 12). b) Highly plastic tough clay (CH with plasticity index greater than 20).
3.	Fair	a) Fairly well graded, gravelly, medium to coarse sand with cohesionless fines. D_{85} coarser than 19 mm, D_{50} between 0·5 mm and 3·0 mm. Not more than 25 percent finer than 75 micron IS sieve. b) Clay of medium plasticity (CL with plasticity index greater than 12).
4.	Poor	a) Clay of low plasticity (CL and CL-ML) with little coarse fraction. Plasticity index between 5 and 8. Liquid limit greater than 25. b) Silts of medium to high plasticity (ML or MH) with little coarse fraction. Plasticity index greater than 10. c) Medium sand with cohesionless fines.
5.	Very poor	a) Fine, uniform, cohesionless silty sand, D_{85} finer than 0·3 mm. b) Silt from medium plasticity to cohesionless (ML). Plasticity index less than 10.

Free Standard provided by BIS via BSB Edge Private Limited to Apurv Bharadiya - (apurvbharadiya44@gmail.com) 106.194.49.41.

AMENDMENT NO. 1 DECEMBER 2008
TO
IS 8826 : 1978 GUIDELINES FOR DESIGN OF LARGE EARTH AND ROCKFILL DAMS

(*Pages* 3 *and* 4, *clause* **0.4**) **—** Substitute:

a) 'IS 1893 : 2004' *for* 'IS 1893-1975'.

b) 'IS 2720 (Part 35) : 1974' *for* 'IS 2720 (Part XXXV)-1976'.

c) 'IS 4999 : 1991' *for* 'IS 4999-1968'.

d) 'IS 5050 : 1992' *for* 'IS 5050-1968'.

e) 'IS 6066 : 1994' *for* 'IS 6066-1971'.

f) 'IS 7356 (Part 1) : 2002' *for* 'IS 7356 (Part 1)-1974'.

g) 'IS 7356 (Part 2) : 2003' *for* 'IS 7356 (Part 2)-1976'.

h) 'IS 7436 (Part 1) : 1993' *for* 'IS 7436 (Part 1)-1973'.

j) 'IS 8237 : 1985' *for* 'IS 8237-1976'.

(*Page* 5, *clause* **2.18**) **—** Substitute 'IS 5050 : 1992' *for* 'IS 5050-1968'.

(*Page* 11, *clause* **4.1.5**) **—** Substitute 'IS 4999 : 1991' *for* 'IS 4999-1968'.

(*Page* 13, *clauses* **4.5.1**, **4.5.2** *and* **4.6**) **—** Substitute 'IS 8237 : 1985' *for* 'IS 8237-1976'.

(*Page* 14, *clause* **4.8**) **—** Substitute 'IS 5050 : 1992' *for* 'IS 5050-1968'.

(*Page* 16, *clause* **5.1.1.1**) **—** Substitute the following for the existing:

'**5.1.1.1** Freeboard for wave run up on slope shall be provided in accordance with the provisions contained in IS 10635 : 1993 Guidelines for freeboard requirements in embankment dams.'

(*Page* 17, *clause* **5.1.3**, *third sentence*) **—** Substitute the following for the existing:

Free Standard provided by BIS via BSB Edge Private Limited to Apurv Bharadiya - (apurvbharadiya44@gmail.com) 106.194.49.41.

Amend No. 1 to IS 8826 : 1978

'Design for control of seepage through dam shall be made in accordance with provisions contained in IS 9429 : 1999 'Code of practice for drainage systems for earth and rockfill dams'.

(*Page* 17, *clause* **5.2**, *second sentence*) **—** Delete.

(*Page* 24, *clause* **8.1**) **—** Insert the following after the second sentence:

'Based on assessment of geo-technical parameters and techno-economic considerations, flyash conforming to IS 3812 : 1981 may be utilized in selected zones in the downstream casing, especially downstream of filter zone.'

(*Page* 25, *clause* **9.2**) **—** Substitute 'IS 7436 (Part 1) : 1993' *for* 'IS 7436 (Part 1)-1973'.

(WRD 9)

Reprography Unit, BIS, New Delhi, India