International Journal of Computational Intelligence Systems (2024) 17:232
https://doi.org/10.1007/s44196-024-00639-w

RESEARCH ARTICLE

Prediction of Remaining Useful Life of Aero-engines Based on CNN-LSTM-Attention

Sizhe Deng[1] · **Jian Zhou**[2]

Received: 24 June 2024 / Accepted: 19 August 2024
© The Author(s) 2024

Abstract
Accurately predicting the remaining useful life (RUL) of aircraft engines is crucial for maintaining financial stability and aviation safety. To further enhance the prediction accuracy of aircraft engine RUL, a deep learning-based RUL prediction method is proposed. This method possesses the potential to strengthen the recognition of data features, thereby improving the prediction accuracy of the model. First, the input features are normalized and the CMAPSS (Commercial Modular Aero-Propulsion System Simulation) dataset is utilized to calculate the RUL for aircraft engines. After extracting attributes from the input data using a convolutional neural network (CNN), the extracted data are input into a long short-term memory (LSTM) network model, with the addition of attention mechanisms to predict the RUL of aircraft engines. Finally, the proposed aircraft engine model is evaluated and compared through ablation studies and comparative model experiments. The results indicate that the CNN-LSTM-Attention model exhibits superior prediction performance for datasets FD001, FD002, FD003, and FD004, with RMSEs of 15.977, 14.452, 13.907, and 16.637, respectively. Compared with CNN, LSTM, and CNN-LSTM models, the CNN-LSTM model demonstrates better prediction performance across datasets. In comparison with other models, this model achieves the highest prediction accuracy on the CMAPSS dataset, showcasing strong reliability and accuracy.

Keywords RUL · CNN · LSTM · Attention · CNN-LSTM-Attention

1 Introduction

As the core propulsion system, precise prediction of the remaining life of an aeroengine can dynamically perceive future changes in its health status, which plays a crucial role in ensuring flight safety, reducing operating costs, optimizing maintenance decisions, and improving overall operating efficiency [35]. Prognostic and health management (PHM) technology is often used by researchers to estimate the remaining usable life (RUL) of aeroengines. The accurate estimation of remaining useful life relies on in-depth analysis of historical trajectory data to reveal the patterns and trends of performance degradation [10]. As technology continues to progress and its range of applications grows, how to make more accurate predictions of the remaining life of aeroengines through continuous iteration and optimization of model parameters has received widespread attention in PHM [11, 12].

Utilizing feature extraction techniques and trend prediction methods for predicting the remaining useful life (RUL) of aeroengines is a crucial step in establishing efficient prediction models. Three primary areas are covered by the standard RUL prediction models: deep learning, superficial machine learning, and statistical analysis. Traditional statistical models are built based on physical theorems or probability distributions to describe actual data or phenomena, including methods based on Wiener and Gamma processes [27], Weibull distribution [1], and Kalman filter methods [28]. For instance, Gebraeel et al. [7] used a Bayesian updating technique to link the historical and present degradation data of the same system, update the random parameters of the exponential degradation model, and determine the equipment's residual life distribution. It should be noted that while traditional statistical analysis can quickly construct a basic model for predicting the RUL of aero-engines, it has difficulties in fully considering the complexity and uncertainty in actual operations, considering the interactions and

✉ Sizhe Deng
1171680406@qq.com

1 College of Mathematics and Statistics, Kashi University, Kashi 844000, People's Republic of China

2 Research Center of China-Pakistan Economic Corridor, Kashi University, Kashi 844000, People's Republic of China

Published online: 03 September 2024

relationships between multiple parameters and indicators, and often adopts a unified model for prediction, which cannot fully reflect the performance degradation characteristics of different components, leading to inaccurate prediction results. Compared to statistical analysis, machine learning exhibits broader practical applications in RUL prediction, reducing the complexity of modeling with less human intervention and computational cost. Deep learning structures such as recurrent neural networks (RNN) and long short-term memory (LSTM) models can process long-term dependencies in time series data by introducing memory units and gating units, which may be difficult to achieve in traditional statistical analysis. The RUL of aeroengines has been commonly predicted using shallow machine learning, such as artificial neural networks (ANN) [6], extreme learning machines (ELM) [31], support vector regression (SVM) [14], and hidden Markov models (HMM) [4]. However, shallow machine learning faces challenges in predicting the RUL of aero-engines, such as reliance on manually designed feature extraction quality and limited capabilities in handling high-dimensional and redundant data. More advanced and effective technical methods need to be explored to address these issues.

Deep learning enables the acquisition of richer performance indicators, operational parameters, and environmental variables of aeroengines from monitored multi-sensor data, capturing, and simulating the complex dynamics of engine performance over time. With the rapid growth and complexity of monitored data for aero-engines, when faced with multi-sensor data (such as vibration, temperature, pressure, sound, etc.), Conventional prediction models that rely on superficial machine learning frequently fail to completely capture the in-depth, nonlinear relationships within the data. Therefore, to predict the remaining useful life (RUL) of aeroengines more accurately, a shift from shallow machine learning models to more advanced deep learning models is necessary [40]. In recent years, deep learning-based life prediction models have achieved remarkable results, demonstrating high prediction accuracy and efficiency, including convolutional neural networks (CNN) [37], autoencoders (AE) [23], deep belief networks (DBN) [22], and other methods. Xie et al. [33] utilized an ensemble network of deep learning to predict the RUL of aero-engines and fitted key parameters using the Backpropagation (BP) algorithm. Li et al. [13] proposed a novel data-driven method using a deep convolutional neural network (DCNN) to effectively extract critical features, thus achieving accuracy in RUL prediction. Ruan et al. [25] further pointed out that the CNN model possesses the characteristics of simple and efficient computation as well as high prediction accuracy. In more complex operating environments, mixed failure modes, and strong noise backgrounds, According to Chang et al. [3], prediction accuracy may be significantly increased by using long short-term memory (LSTM) to accurately capture both short- and long-term temporal relationships in time series data. Yuan et al. [34] also proposed a neural network solution based on LSTM to accurately predict and evaluate the RUL of aeroengines. Liu et al. [19] introduced an improved multi-level long short-term memory network (ILSTMC) as a novel RUL prediction model for aero-engines, demonstrating that the ILSTMC prediction model can effectively reduce the prediction error of aero-engine RUL. It should be noted that traditional CNN, LSTM, and their variants still have some limitations, especially when capturing long-distance features or building associations between non-adjacent data [38]. For instance, traditional convolution operations are limited by the size of the convolutional kernel and cannot capture dependencies between distant features in the sequence. While LSTM can handle long sequences through its internal gating mechanism, it still has limitations in constructing complex associations between non-adjacent data. Additionally, in parallel training, traditional models need to process data sequentially, making it difficult to achieve efficient parallel computation, limiting the training speed of the model and its deployment capabilities in large-scale applications. Moreover, deep learning often faces issues of information overload due to the large amount of stored information.to overcome these limitations, combining self-attention mechanisms with LSTM networks can significantly enhance the comprehensive processing ability of input sequence information. By using this technique, information processing becomes more accurate and efficient while also allowing deep learning models to automatically recognize and prioritize important aspects while stifling those that do not contribute as much, resulting in more precise analysis and prediction. The self-attention mechanism can correlate features at different positions [15], directly capturing long-distance features and associations between non-adjacent data by calculating the correlation coefficients between any two input sequence places. To precisely estimate the equipment's remaining useful life, Zhang et al. [36] fused Temporal Self-Attention Modules (TSAM) with Bidirectional Gated Recurrent Units. Liu et al. [16] proposed integrating a channel attention mechanism before Bidirectional Gated Recurrent Units for predicting the RUL of aeroengines, adjusting BiGRU's attention to information from various channels, thus improving the accuracy and efficiency of RUL prediction.

Modern aviation places greater emphasis on improving the reliability, quality, and safety of aircraft systems [21, 29]. As a critical component of an aircraft, the engine requires the further development of more precise prediction models for the remaining useful life (RUL) of aerospace engines. The adoption of hybrid methods can leverage the advantages of each method while avoiding its disadvantages, resulting in

lower regression analysis errors and degradation prediction errors, thus enhancing the overall performance, stability, and generalization ability of the model. This paper proposes an innovative combined prediction method that integrates CNN, LSTM, and Self-attention for more accurate predictions of the RUL of aerospace engines. Firstly, the dataset for the RUL of aerospace engines undergoes preprocessing to meet the input requirements of the model. Secondly, the processed data undergoes feature extraction using the CNN model, which utilizes the CNN network to deeply mine each feature, capturing the key local features in the data. Finally, a combined model based on LSTM and the self-attention mechanism (LSTM-Attention) is employed to model the extracted features. Leveraging its ability to analyze time series data, it achieves precise predictions of the RUL of aerospace engines. In summary, the contributions made in this research on the issue can be summarized as follows:

(1) The proposed model for predicting the remaining useful life (RUL) of aero-engines can extract effective information from various engine characteristics and demonstrate good performance in subsequent RUL predictions.
(2) By incorporating a self-attention mechanism into the CNN-LSTM model, the LSTM component pays more attention to the important parts of the features reconstructed by CNN during the final prediction.
(3) To prevent potential overfitting issues in predicting the RUL of engines, the Dropout method was applied, and the experimental results have proven the effectiveness of this method in the study.

2 Algorithm Theoretical Basis

2.1 CNN Model

The basic function of a CNN, which is a type of feedforward neural network, is to extract features from input data by applying several filters [24, 42]. Layer by layer, these filters extract aspects of the input data's topological structure by performing pooling and convolution operations. The retrieved features get increasingly abstract as the number of network layers increases gradually, until robust features with translation and rotation invariance are derived from the original input data.

Sparse connection and weight sharing are features of the CNN network itself. Among these, sparse connectivity lowers the number of parameters needed for model training by using spatial topology to create non-fully linked spatial connections between neighboring layers; the algorithm is kept from overfitting by using weight sharing. Furthermore, by using the local characteristics of the data, pooling techniques minimize the data dimension while enhancing feature resilience and network structure optimization.

A CNN network generally consists of an input layer, convolutional layers, pooling layers, fully connected layers, and an output layer. Early on in the CNN feature extraction process, convolutional and pooling layers are alternately used to extract features from the input data layer by layer, and typical multi-layer neural networks are almost fully implemented at the output layer. The convolution kernel of the convolutional layer convolutionizes the output feature vectors from the previous layer, and then uses nonlinear activation functions to construct the output feature vectors. The output of each layer is the convolution of its numerous input properties, which are expressed mathematically as follows:

$$x_j^l = f\left(\sum_{i \in M_j} x_i^{l-1} * k_{ij}^l + b_j^l\right) \tag{1}$$

In Eq. (1), M_j represents the input feature vector; l represents the l layer of the network; k represents the convolution kernel; b represents the network bias; x_i^l represents the output of the lth layer; and x_i^{l-1} represents the input of the lth layer. In CNNs, rectified linear units (ReLUs) are commonly selected as the nonlinear activation function. ReLU has the benefit of allowing certain neurons' output to be zero, which increases the sparsity of the network and decreases parameter dependency, hence minimizing the risk of overfitting. The following is the formulaic representation of ReLU:

$$a_i^{l+1}(j) = f\left(y_i^{l+1}(j)\right) = \max\left\{0, y_i^{l+1}(j)\right\} \tag{2}$$

In Eq. (2), $y_i^{l+1}(j)$ represents the output value of the convolution operation; $a_i^{l+1}(j)$ is the activation value of $y_i^{l+1}(j)$.

The pooling layer is a downscaling mapping of the previous layer's data. In practical applications, the max pooling operator is often adopted, which extracts local maxima from the input features, reducing the number of trainable parameters and improving the robustness of the features. The transformation function of max pooling is shown as follows:

$$P_i^{l+1}(j) = \max_{(j-1)W+1 \le t \le jW} \left\{q_i^l(t)\right\} \tag{3}$$

In Eq. (3), $q_i^l(t)$ represents the value of the tth neuron in the ith feature vector of the lth layer; W is the width of the pooling region; $P_i^{l+1}(j)$ represents the corresponding value of the $l+1$ layer neuron.

To discover the group with the highest correlation, all of the aforementioned findings are weighted and summed via the fully connected layer to arrive at the final

recognition result. Because of its distinct convolutional structure, CNN can process data more quickly by using a lot less compute and effort. This article selects one-dimensional CNN because the remaining life sequence of the aeroengine is one-dimensional data.

2.2 LSTM Model

LSTM model [8] is a popular and reliable prediction method in the field of remaining usable life prediction. A unique neural network with a memory function, the long short-term memory network (LSTM) modifies the memory state during information transmission via a "gating" mechanism. This allows for selective forgetting and retention of information within the network, allowing information from previous time steps to be transferred to cells in subsequent time steps. When compared to conventional deep learning techniques, LSTM successfully mitigates gradient disappearance to a certain degree, increasing prediction accuracy.

Specifically, LSTM consists of three parts, namely, the forget gate, the input gate, and the output gate, and their functions are as follows:

(1) The forget gate f_t controls how much information from the previous internal state c_{t-1} needs to be forgotten;
(2) The input i_t gate controls how much information from the candidate state c_t at the current moment needs to be saved.
(3) The output gate o_t controls how much information from the internal state c_t at the current moment needs to be output to the external state h_t.

The calculation formulas for the three gates are as follows:

$$\begin{aligned} f_t &= \sigma\left(W_f x_t + U_f h_{t-1} + b_f\right) \\ i_t &= \sigma\left(W_i x_t + U_i h_{t-1} + b_i\right) \\ o_t &= \sigma\left(W_o x_t + U_o h_{t-1} + b_o\right) \\ c_t &= f_t \odot c_{t-1} + i_t \odot c_t \\ h_t &= o_t \odot \tanh(c_t) \\ c_t &= \tanh\left(W_c x_t + U_c h_{t-1} + b_c\right) \end{aligned} \tag{4}$$

In Eq. (4), x_t is the input variable; c_t represented as memory unit; c_{t-1} is the memory unit of the previous moment; W_f, W_i, W_o, W_c are, respectively, the input weight vectors of the forgetting gate, the input gate, the output gate and the candidate unit; U_f, U_i, U_o, U_c are the cyclic weight vectors of each gating unit; b_f, b_i, b_o, b_c is the bias vector of each gated unit; $\sigma(\cdot)$ indicates changes in the sigmoid function; tanh is the tanh activation function. See Fig. 1 for LSTM structure diagram.

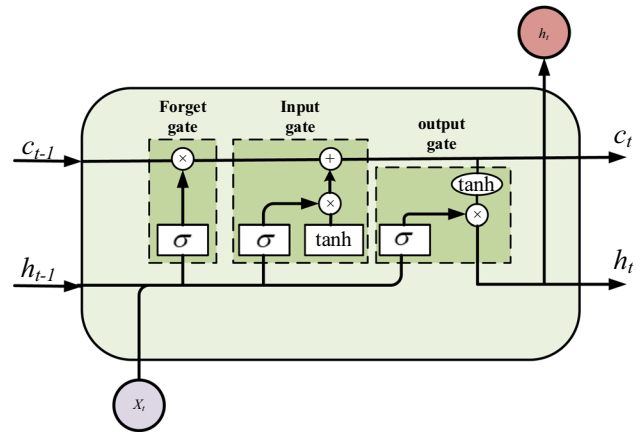

Fig. 1 LSTM neuronal structure

2.3 Attention

The essential tenet of the attention mechanism is that distinct brain areas require attention at various times. This approach may be used to efficiently lessen the focus of prediction models to other locations at a given time, thus increasing its focus on key regions. This redistribution of attention between key and non-key regions improves the model's prediction accuracy [5, 18, 32]. The attention mechanism can mitigate the situation where LSTM networks lose important information due to excessively long temporal data, by replacing random weight allocation with a probabilistic approach.

In specifically introducing the attention mechanism into a model, the first step is to take the input set as a list of feature vectors as the model's input. At the same time, the model is trained to perform dot-product training on the sample data, generating three different representation vectors for each sample: Q (query), K (key), and V (value).

$$\begin{aligned} Q &= W^Q \times I \\ K &= W^K \times I \\ V &= W^V \times I \end{aligned} \tag{5}$$

In Eq. (5), I indicates the input data and W^Q, W^K, and W^V are the weight matrices to be learned. Next, a similarity function $F(Q, K)$ is used to score the samples and obtain the attention scores. Finally, the attention scores are normalized using the softmax function to obtain the weight coefficients for each part.

$$F(Q,K) = \text{Soft max}\left(\frac{Q \times K^T}{\sqrt{dk}}\right) \tag{6}$$

In Eq. (6), $F(Q,K)$ represents the attention matrix, it represents the degree of correlation between the elements in each column; dk represents the data input dimension.

These weight coefficients are then used to perform a dot-product operation with the known value vector V, resulting in the output of the attention mechanism, attention value.

$$\text{Attention}(Q,K,V) = F(Q,K) \times V \tag{7}$$

3 Proposed Method

3.1 Model Principle and Prediction Framework

3.1.1 Model Principle

The remaining life prediction model of aero-engine built this time is shown in Fig. 2. The specific principle is as follows:

First, the RUL (remaining useful life) of the aeroengine is calculated, and various performance parameters are standardized. The processed features and the remaining useful life of the engine are then input into the model. A CNN network is used to extract and fuse the features, generating several feature maps $H_CNN = CNN(x_1, x_2, \ldots, x_n)$. Next, the feature maps and their corresponding RUL values are input into the LSTM-Attention network for prediction and the output variable is the RUL value $H_out = LSTM - Attention(H_CNN)$. Using a comparative analysis technique, the procedure determines the model's hyperparameter values. The trained model is then given the test set data to obtain the prediction results and accuracy.

To prevent overfitting of the model, the methods of dropout and early stopping are adopted, which are described as follows:

(1) Dropout [2]. Dropout can randomly discard a certain proportion of neuron weights during forward propagation, achieving the effect of model averaging ensemble and increasing sparsity, thus preventing the occurrence of co-adaptation relationships between feature detectors. In this model, a certain proportion of weights in the LSTM layer are randomly discarded.
(2) Early stopping. Determining the model parameters when the validation set error stops decreasing for consecutive iterations as the final parameters can effectively address the overfitting issue that arises during the training process.

3.1.2 Forecasting Framework

As seen in Fig. 3, the methodology for estimating an aero-engine's remaining usable life (RUL) in this article is broken down into three stages: data preprocessing, model establishment, and model training and testing. First, the sensor values are standardized and the engine's RUL is computed and segmented for the dataset. Subsequently, training, validation, and testing sets are created from the processed data. The CNN-LSTM-Attention model developed in this research is then fed the training set, and the validation set is utilized to decide when to end the training. Finally, the testing set is input into the trained model to output the final predicted value and prediction accuracy.

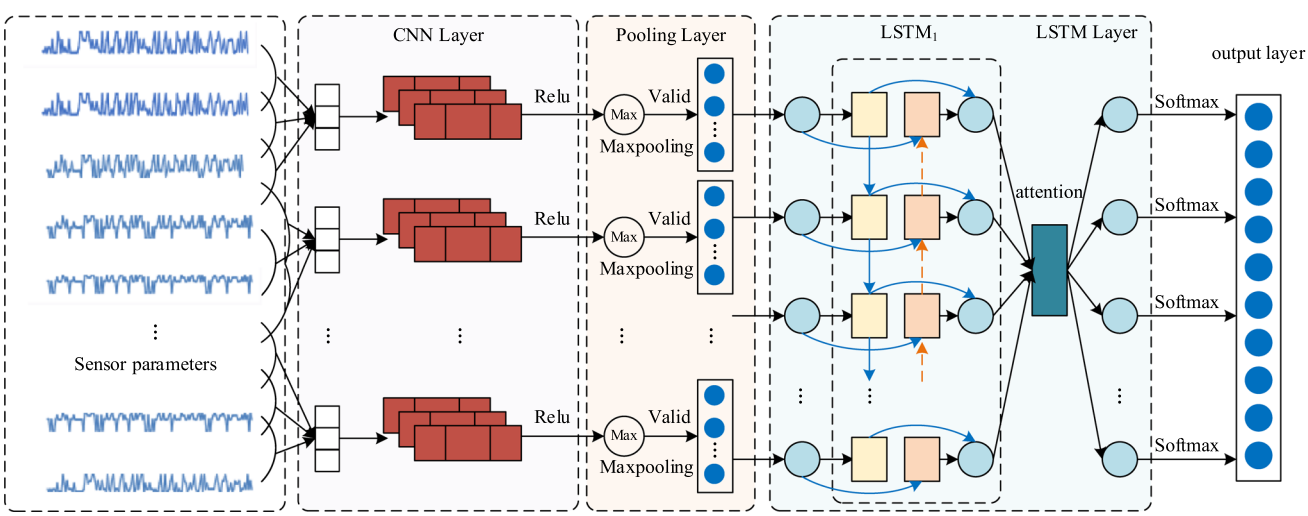

Fig. 2 Model structure diagram

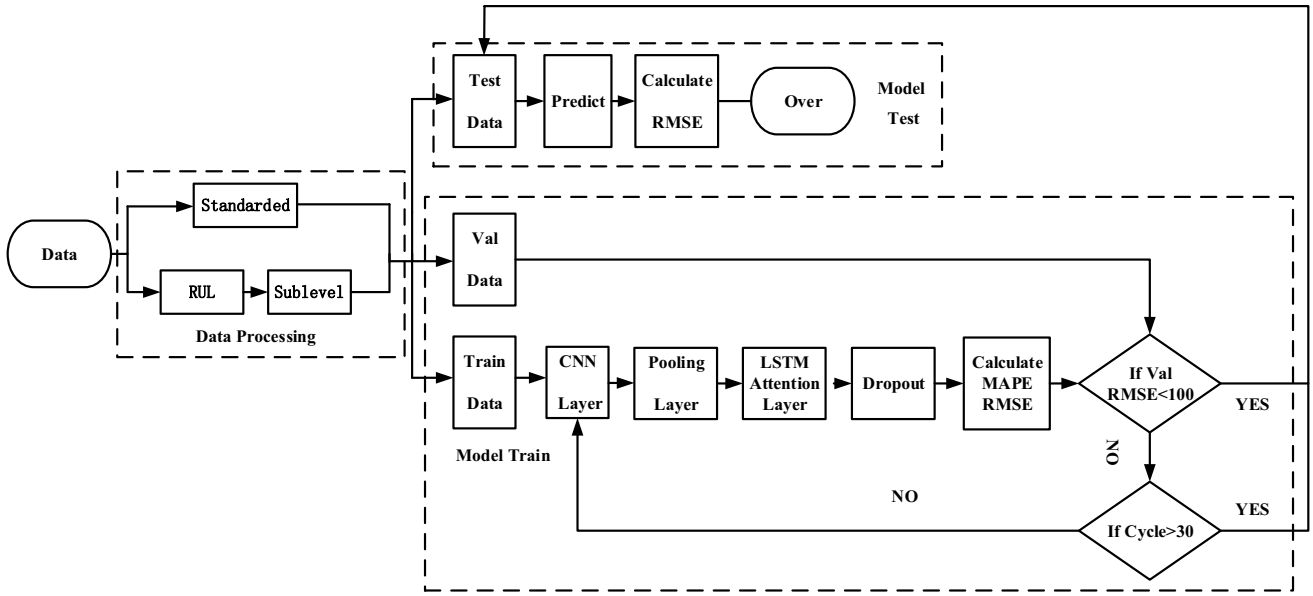

Fig. 3 Experimental flow chart

Table 1 C-MAPASS data set

Dataset	FD001	FD002	FD003	FD004
Train data	100	260	100	249
Test data	100	259	100	248
Working condition	1	6	1	6
Fault type	1	1	2	2

3.2 Introduction and Analysis of the Experimental Dataset

C-MAPSS is a turbofan engine dataset that contains degradation data of multi-source performance of turbofan engines under different operating conditions and fault modes [43]. It consists of four sub-datasets, and each dataset can be further divided into a training set, a testing set, and RUL (remaining useful life) labels for the testing set [20]. Specifically, the training set includes all state parameters of the turbofan engine from startup to a point before failure occurs; the testing set contains state parameters from startup to a certain time point before failure; The remaining useful life of the engine at the last time point in the testing set is represented by the RUL labels, which can be used to gauge how well the prediction model generalizes. Table 1 displays the fundamental data for the four datasets. It can be seen from the number of test sets and training sets in the table that the test sets and training sets of the four data sets are roughly divided into a ratio of 1:1. The Working condition of Data Set 1 and Data Set 3 is one type, while Data Set 2 and Data Set 4 are two types. In terms of fault types, Data Set 1 and Data Set 2 have the same fault type and are manifested as one type. Data Set 3 and Data Set 4 both have two fault types. To verify the robustness of the remaining life prediction model of aero-engine in this paper, Data Set 2 with multiple working conditions and single fault type is selected for focused discussion, and the other three data sets are also verified. Data Set 2 has more complex working conditions than Data Set 1 and Data Set 3 with single working condition, and has fewer fault types than Data Set 4 (Table 2).

In the C-MAPSS-FD002 dataset, each engine mainly includes three operational condition monitoring parameters (flight altitude, Mach number, and thrust lever angle) and 21 performance monitoring parameters, as shown in Fig. 2.

A visual analysis of the first nine performance parameters of Engine No. 1 from the training set of Dataset 2 is presented in Fig. 4. Compared to the engine performance parameters of Dataset 1, the parameters in Dataset 2 do not exhibit a clear degradation trend over time, which is attributed to the presence of six distinct operating conditions in Dataset 2. Consequently, when selecting a model for construction, we favor the use of a convolutional neural network (CNN) model to more fully realize feature interactions and output reconstructed features, which collectively determine the RUL.

Table 2 Definition of indicators

Serial number	Symbol	Description
1	T2	Total temperature at fan inlet
2	T24	Total temperature at LPC outlet
3	T30	Total temperature at HPC outlet
4	T50	Total temperature at LPT outlet
5	P2	Pressure at fan inlet
6	P15	Total pressure in bypass-duct
7	P30	Total pressure at HPC outlet
8	NF	Physical fan speed
9	NC	Physical core speed
10	EPR	Engine pressure ratio (P50/P2)
11	PS30	Static pressure at HPC outlet
12	PHI	Ratio of fuel flow to Ps30
13	NRF	Corrected fan speed
14	NRC	Corrected core speed
15	BPR	Bypass ratio
16	FARB	Burner fuel–air ratio
17	HT_BLEED	Bleed enthalpy
18	NF_DMD	Demanded fan speed
19	PCNFR_DMD	Demanded corrected fan speed
20	W31	HPT coolant bleed
21	W32	LPT coolant bleed

3.3 Data Preprocessing

3.3.1 Standardized Processing

Considering that the large differences in the dimensions and orders of magnitude of different indicators can affect the prediction effect of the model to a certain extent, while standardized data can help improve the convergence speed of the model. Therefore, we standardize the three operational condition monitoring parameters and 21 performance monitoring parameters, and the calculation formula is as follows:

$$Z_i = \frac{X_i - u}{\sigma} \tag{8}$$

In Eq. (8), X_i represents the ith monitoring indicator in the dataset, u, σ represent the mean and standard deviation of the ith monitoring indicator, respectively; and Z_i represents the ith monitoring indicator after standardization.

3.3.2 Life Prediction Evaluation Index

To compare the remaining useful life prediction results of different prediction models, this paper selects the commonly used regression algorithm evaluation metrics, RMSE and MAPE, as the comparative evaluation indicators. RMSE is an indicator that measures the difference between the predicted value output by the model and the true value, while MAPE is the average of absolute errors. The specific calculation formulas are as follows:

$$\mathrm{RMSE} = \sqrt{\frac{1}{n}\sum_{i=1}^{n}\left(\hat{y}_i - y_i\right)^2} \quad \mathrm{MAPE} = \frac{1}{n}\sum_{i=1}^{n}\left|\frac{\hat{y}_i - y_i}{y_i}\right| \tag{9}$$

In Eq. (9), $\hat{y}$ is the predicted life value and y is the true-life value.

3.3.3 RUL Segmentation

When modeling and predicting the RUL labels, it is necessary to consider the characteristics of the turbofan engine itself. Under normal conditions, the engine's lifetime will decay in a certain way after a period of normal operation [17]. Therefore, this paper adopts a piecewise linear model to represent the remaining useful life decay of an aeroengine. To increase the accuracy of the model prediction, it is assumed that there is no degradation phenomenon during the initial operation phase of the engine, and its lifetime remains constant. Only when it exceeds the turning point of lifetime decay, does the engine's RUL begin to degrade linearly, and its lifetime becomes the actual value. This is specifically shown in Fig. 5. In this figure, the horizontal axis represents the operating cycle, and the vertical axis represents the remaining useful life (RUL). The true RUL is represented by a dashed line, while the adjusted RUL is represented by a red line. Specifically, the adjustment operation is to set the RUL to 100 as a threshold value. When the true life is higher than 100, it is replaced with a life value of 100 and when it is lower than 100, it shows normal decline.

3.3.4 Sliding Window Processing

Due to the long-term periodicity of sensor monitoring data, a sliding window method is adopted to dynamically read data according to a certain step size and window size until the entire data sequence is traversed [39, 41]. The step size is set to 1 in the experiment, and the window size is selected through experimental design. Specifically, moving windows of sizes 30, 35, 40, and 45 are selected, and the results are shown in Fig. 6. As the window size increases, the RMSE decreases. When the window size changes from 35 to 40, the RMSE shows a significant decrease. When the window

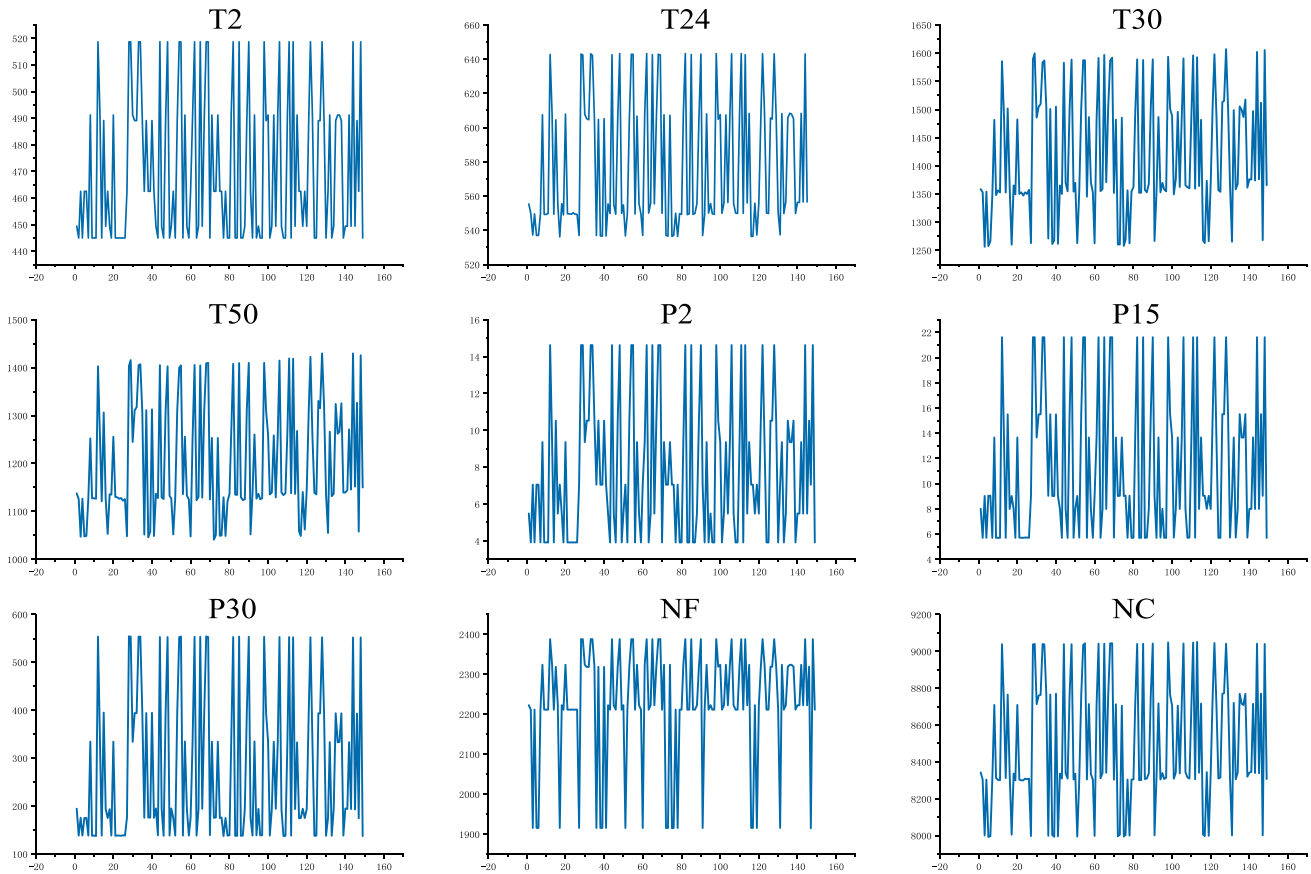

Fig. 4 Partial performance parameters

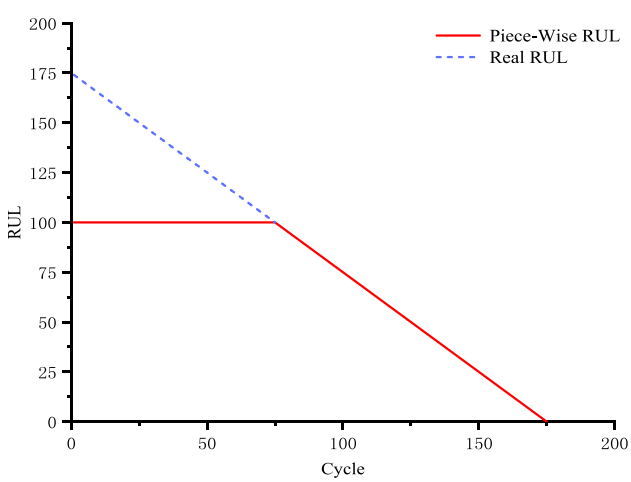

Fig. 5 Demonstration diagram of RUL segmentation processing

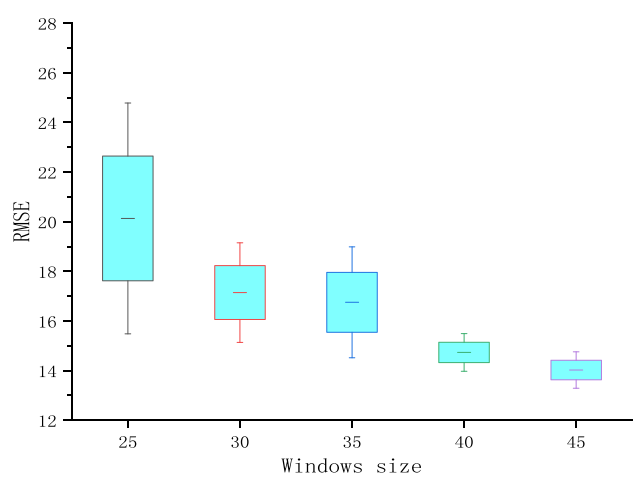

Fig. 6 Error diagram of sliding window

size changes from 40 to 45, the RMSE decreases slightly, but considering that an increase in the window size can lead to the loss of some prediction information for the remaining battery life, this paper sets the moving window size to 40.

3.4 Predictive Research and Analysis

The experimental comparison method was used to select hyperparameters in the CNN-LSTM-Attention model and the selection results are shown in Table 3.

Table 3 Model hyperparameter

Parameter name	Value
Input layer size	24
CNN layers	1
LSTM layers	1
Attention neuron	32
Convolutional kernel size	[3 1]
Numbers of convolutional kernel	36
CNN stride	1
Pooling size	[3 1]
Pooling stride	1
LSTM hidden size	64
Dropout scale	0.8
Training rounds	25
Batch size	128

A comparison of the remaining useful life (RUL) and predicted RUL of four randomly selected aeroengines from the test set is shown in Fig. 7. During the initial operation of the engines, their various sensor monitoring parameters did not exhibit significant degradation characteristics. Therefore, there is a big difference between the predicted remaining life and the original data, which is manifested as up and down fluctuations. As the number of engine operations increases, the battery exhibits degradation characteristics, and the model also demonstrates strong predictive capabilities during this period. Overall, the predicted life of a single engine is consistent with the actual life pattern, and it shows high prediction accuracy in the later stages. Therefore, the model has strong generalization capabilities in dataset 2 with varying operating conditions.

Figure 8 shows the comparison between the output prediction results of the CNN-LSTM-Attention model in the test set and the actual results in the variable working condition engine dataset. It can be seen from the figure that most of the predicted remaining lifetimes overlap with the actual remaining lifetimes, and only a few predicted values show large differences. Therefore, the prediction results are accurate and reliable.

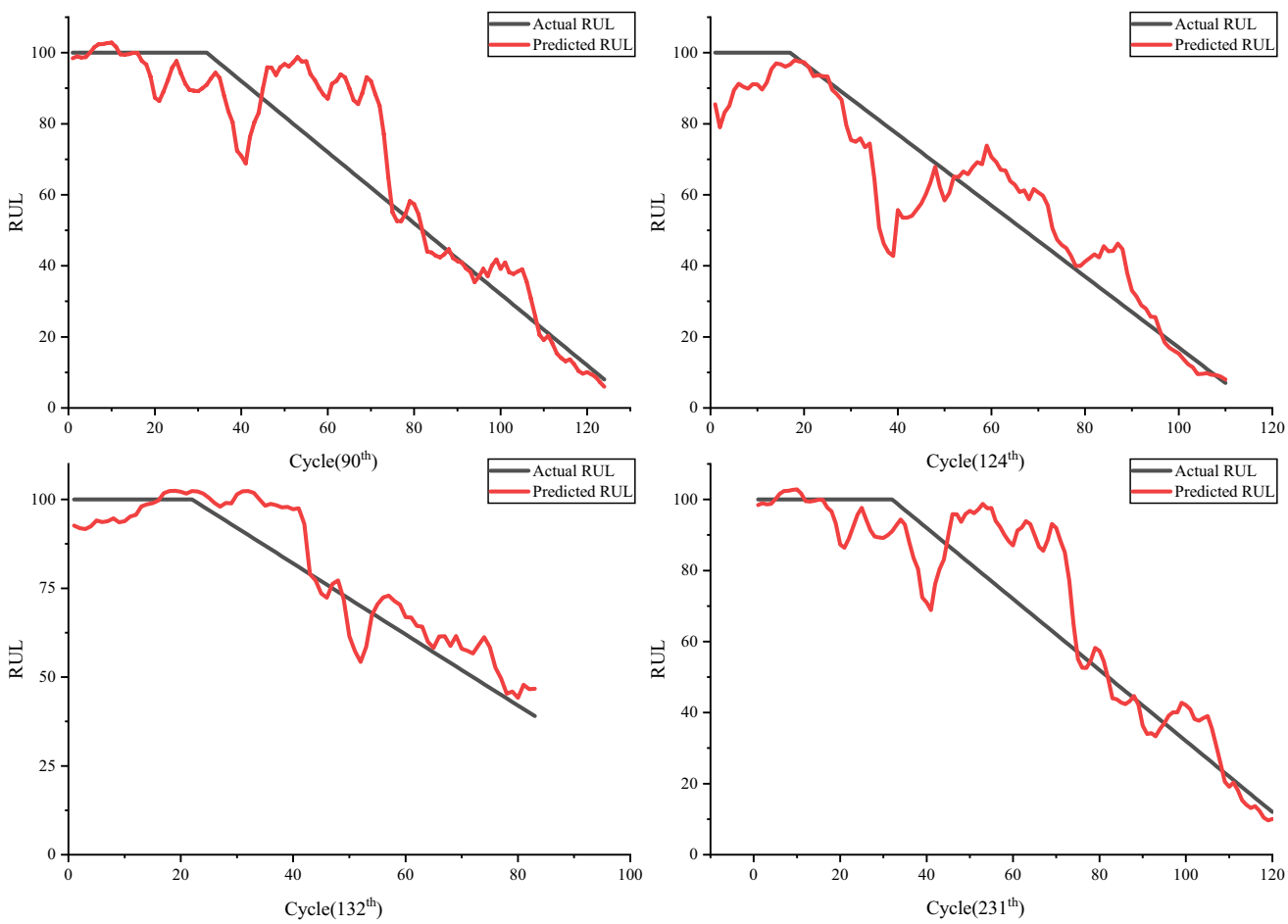

Fig. 7 Real and predicted life of 4 engines in FD002

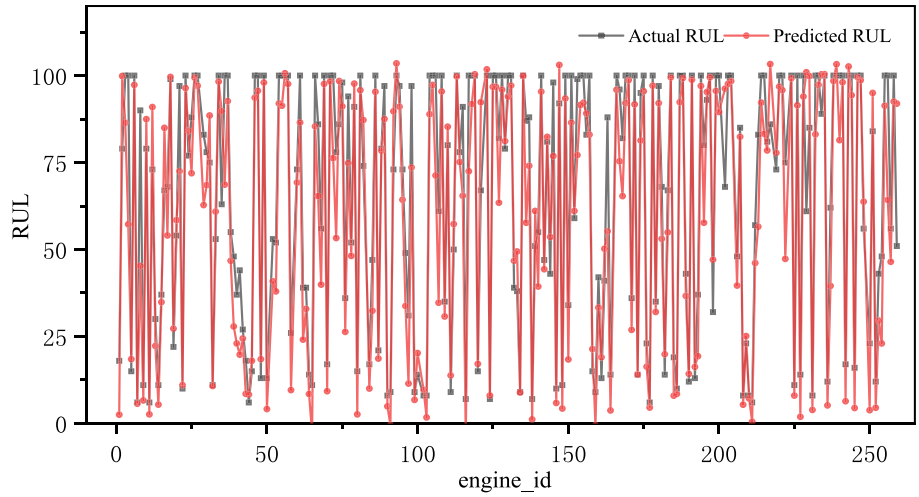

Fig. 8 Real and predicted residual life of different engines

Table 4 Prediction accuracy of different data set models

Dataset	Working condition	Fault type	RMSE	MAPE
FD001	1	1	15.977	0.161
FD002	6	1	14.452	0.139
FD003	1	2	13.907	0.115
FD004	6	2	16.637	0.130

Table 5 Ablation experiment

Model	RMSE	MAPE
CNN	21.574	0.232
LSTM	18.730	0.189
CNN-LSTM	17.879	0.183
CNN-LSTM-Attention	14.452	0.139

To further validate the model's generalization ability for the same fault, training and validation were conducted on three other datasets, and the results are shown in Table 4. The test set with the best model performance is FD003 with root mean square error (RMSE) and MAPE of 13.907 and 0.115, respectively. The accuracy of the FD004 dataset is relatively low, with RMSE and MAPE of 16.637 and 0.130, respectively. Therefore, based on the performance of the other datasets, it can be concluded that the aero-engine remaining useful life prediction model built in this paper has strong generalization ability.

3.5 Ablation Study

To verify the effectiveness of the proposed fusion algorithm for predicting the remaining useful life of aero-engines, three structures: CNN, LSTM, and CNN-LSTM were selected. With the hyperparameter settings kept unchanged, RMSE and MAPE were used as evaluation metrics for comparison. The results are shown in Table 5. As can be seen from the table, when used as individual learners, CNN, LSTM, and CNN-LSTM do not perform as well as the proposed CNN-LSTM-Attention fusion model in terms of prediction accuracy. The RMSE of the fusion model after learning is reduced by approximately 3.427 to 7.122 compared to the individual learners. Therefore, it can be concluded that the proposed fusion model for predicting the remaining useful life of aeroengines has achieved significant improvements.

Table 6 Prediction accuracy of different network models

Model	RMSE	MAPE
BP	21.868	0.262
GRU	21.762	0.223
CNN-GRU	17.863	0.178
DCNN	19.826	0.193
TCNN	18.217	0.187
CNN-LSTM-Attention	14.452	0.139

3.6 Model Comparison

To validate the performance of the CNN-LSTM-Attention model, its accuracy in predicting the remaining useful life of variable condition turbofan engines was compared with BP [2], GRU [26], LSTM [34], CNN-GRU [9], DCNN [13], and TCNN [30], as detailed in Table 6. For BP, the RMSE and MAPE in the lifetime prediction problem both reached around 30. A unique kind of recurrent neural network known as GRU uses a gating mechanism to efficiently update and choose data, resulting in prediction accuracy of 0.223 MAPE

and 21.762 RMSE. While DCNN, TCNN, and CNN-GRU all outperformed the CNN-LSTM-Attention model in terms of prediction accuracy, they fell short in terms of estimating the remaining usable life of variable condition turbofan engines.

4 Conclusion

Estimating an aeroengine's remaining usable life is essential to risk prevention, risk reduction, and improved property and human safety. Optimizing forecast accuracy can also yield more sensible recommendations for engine health management, allowing for the implementation of more sensible maintenance practices.

In response to the question of estimating an aero-engine's remaining usable life, this research suggests a prediction model based on CNN-LSTM-Attention. First, local characteristics are extracted from the aero-engine's sensor data using CNN. The deep mining of data characteristics is then realized by using the LSTM-Attention network to learn and forecast the engine's remaining usable life. Following that, investigations are carried out that compare various models of usable life remaining after ablation. The CNN-LSTM-Attention model performs well in predictions on four datasets, according to experimental results; the RMSEs of the FD001, FD002, FD003, and FD004 datasets are 15.977, 14.452, 13.907, and 16.637, respectively. This model performs better in terms of prediction accuracy on the test datasets when compared to single models and other existing network models. In conclusion, the CNN-LSTM-Attention model shows excellent accuracy and consistency when estimating an aero engine's remaining usable life.

Although the CNN-LSTM-Attention model shows strong performance in predicting the remaining service life of aero engines, the experiment still has some shortcomings. Firstly, the performance of the model on dataset 4 with multiple operating conditions and multiple faults is worse than that on other datasets. Secondly, the prediction model of residual service life of aero-engine under complex work and fault conditions is not considered. Thirdly, this paper mainly focuses on optimizing the prediction accuracy of the remaining service life of the engine from the perspective of model adaptation, and less emphasis is placed on noise reduction and related pre-processing of the data set. Therefore, this paper will optimize the model on future datasets with more failure modes and try to mine more effective information from the data itself.

Author contributions Sizhe Deng and Jian Zhou wrote the main manuscript text. All authors reviewed the manuscript.

Funding This research was funded by the Kashi University China-Pakistan Economic Corridor Research Center Foundation project (grant number 2023HX0158). The funders had no role in the design of the study, data collection and analysis, decision to publish, or preparation of the manuscript.

Data availability No datasets were generated or analyzed during the current study.

Declarations

Conflict of interest The authors declare that there are no competing interests.

Open Access This article is licensed under a Creative Commons Attribution 4.0 International License, which permits use, sharing, adaptation, distribution and reproduction in any medium or format, as long as you give appropriate credit to the original author(s) and the source, provide a link to the Creative Commons licence, and indicate if changes were made. The images or other third party material in this article are included in the article's Creative Commons licence, unless indicated otherwise in a credit line to the material. If material is not included in the article's Creative Commons licence and your intended use is not permitted by statutory regulation or exceeds the permitted use, you will need to obtain permission directly from the copyright holder. To view a copy of this licence, visit http://creativecommons.org/licenses/by/4.0/.

References

1. Ben Ali, J., Chebel-Morello, B., Saidi, L., Malinowski, S., Fnaiech, F.: Accurate bearing remaining useful life prediction based on Weibull distribution and artificial neural network. Mech. Syst. Signal Process. **56–57**, 150–172 (2015)
2. Caceres, J., Gonzalez, D., Zhou, T.T., Droguett, E.L.: A probabilistic Bayesian recurrent neural network for remaining useful life prognostics considering epistemic and aleatory uncertainties. Struct. Control. Health Monit. **28**, e2811 (2021)
3. Chang, Y.-S., Chiao, H.-T., Abimannan, S., Huang, Y.-P., Tsai, Y.-T., Lin, K.-M.: An LSTM-based aggregated model for air pollution forecasting. Atmos. Pollut. Res.Pollut. Res. **11**, 1451–1463 (2020)
4. Dong, M., He, D.: A segmental hidden semi-Markov model (HSMM)-based diagnostics and prognostics framework and methodology. Mech. Syst. Signal Process. **21**, 2248–2266 (2007)
5. Gan, F.F., Shao, H.D., Xia, B.Z.: An adaptive model with dual-dimensional attention for remaining useful life prediction of aero-engine. Knowl.-Based Syst. **293**, 111738 (2024)
6. Gebraeel, N., Lawley, M., Liu, R., Parmeshwaran, V.: Residual life, predictions from vibration-based degradation signals: a neural network approach. IEEE Trans. Ind. Electron. **51**, 694–700 (2004)
7. Gebraeel, N.Z., Lawley, M.A., Li, R., Ryan, J.K.: Residual-life distributions from component degradation signals: a Bayesian approach. IIE Trans. **37**, 543–557 (2005)
8. Hochreiter, S., Schmidhuber, J.: Long short-term memory. Neural Comput.Comput. **9**, 1735–1780 (1997)
9. Jafari, S., Byun, Y.C.: A CNN-GRU approach to the accurate prediction of batteries' remaining useful life from charging profiles. Computers **12**, 219 (2023)
10. Lee, J., Wu, F., Zhao, W., Ghaffari, M., Liao, L., Siegel, D.: Prognostics and health management design for rotary machinery

systems-reviews, methodology and applications. Mech. Syst. Signal Process. **42**, 314–334 (2014)
11. Lei, Y.G., Li, N.P., Guo, L., Li, N.B., Yan, T., Lin, J.: Machinery health prognostics: a systematic review from data acquisition to RUL prediction. Mech. Syst. Signal Process. **104**, 799–834 (2018)
12. Li, W., Zhong, X., Shao, H.D., Cai, B.P., Yang, X.K.: Multi-mode data augmentation and fault diagnosis of rotating machinery using modified ACGAN designed with new framework. Adv. Eng. Inform. **52**, 101552 (2022)
13. Li, X., Ding, Q., Sun, J.-Q.: Remaining useful life estimation in prognostics using deep convolution neural networks. Reliab. Eng. Syst. Saf.. Eng. Syst. Saf. **172**, 1–11 (2018)
14. Liang, Z., Ramakrishnan, K.R., Ng, C.-T., Zhang, Z., Fu, J.: Vibration-based prediction of residual fatigue life for composite laminates through frequency measurements. Compos. Struct. **329**, 117771 (2024)
15. Lin, L., Wu, J.L., Fu, S., Zhang, S.H., Tong, C.S., Zu, L.Z.: Channel attention & temporal attention based temporal convolutional network: a dual attention framework for remaining useful life prediction of the aircraft engines. Adv. Eng. Inform. **60**, 102372 (2024)
16. Liu, H., Liu, Z.Y., Jia, W.Q., Lin, X.K.: Remaining useful life prediction using a novel feature-attention-based end-to-end approach. IEEE Trans. Industr. Inf.Industr. Inf. **17**, 1197–1207 (2021)
17. Liu, H., Liu, Z.Y., Jia, W.Q., Lin, X.K., IEEE.: A novel deep learning-based encoder-decoder model for remaining useful life prediction. International Joint Conference on Neural Networks (IJCNN), Jul 14–19 2019 Budapest, Hungary. (2019)
18. Liu, H., Sun, Y.C., Ding, W.H., Wu, H.L., Zhang, H.Y.: Enhancing non-stationary feature learning for remaining useful life prediction of aero-engine under multiple operating conditions. Measurement **227**, 114242 (2024)
19. Liu, J., Lei, F., Pan, C., Hu, D., Zuo, H.: Prediction of remaining useful life of multi-stage aero-engine based on clustering and LSTM fusion. Reliab. Eng. Syst. Saf. **214**, 107807 (2021)
20. Liu, L., Song, X., Zhou, Z.T.: Aircraft engine remaining useful life estimation via a double attention-based data-driven architecture. Reliab. Eng. Syst. Saf. **221**, 108330 (2022)
21. Olivier, J.M., Ron, R., Price, J.C., Forrest, J.S.: Overview of the aviation industry and security in the post-9/11 world. (2016)
22. Peng, K., Pi, Y., Jiao, R., Tang, P.: Health indicator construction and remaining useful life prediction for aircraft engine. Control Theory Appl. **37**, 713–720 (2020)
23. Remadna, I., Terrissa, L.S., Al Masry, Z., Zerhouni, N.: RUL prediction using a fusion of attention-based convolutional variational autoencoder and ensemble learning classifier. IEEE Trans. Reliab. **72**, 106–124 (2023)
24. Ren, G.H., Wang, Y., Shi, Z.Y., Zhang, G.G., Jin, F., Wang, J.: Aero-engine remaining useful life estimation based on CAE-TCN neural networks. Appl. Sci.-Basel **13**, 17 (2023)
25. Ruan, D.W., Wu, Y.H., Yan, J.P., IEEE.: Remaining useful life prediction for aero-engine based on LSTM and CNN. 33rd Chinese Control and Decision Conference (CCDC), May 22–24 2021 Kunming, Peoples R China. 6706–6712. (2021)
26. Shang, Y.F., Zheng, H., Duan, S.Q., Zhao, D.Z., IEEE.: Prediction of remaining engine life based on multi-sensing fusion. 11th International Conference on Mechanical and Aerospace Engineering (ICMAE), Jul 14–17 2020 Athens, GREECE. 68–71. (2020)
27. Si, X.-S., Wang, W., Hu, C.-H., Chen, M.-Y., Zhou, D.-H.: A Wiener-process-based degradation model with a recursive filter algorithm for remaining useful life estimation. Mech. Syst. Signal Process. **35**, 219–237 (2013)
28. Simon, D., Simon, D.L.: Constrained Kalman filtering via density function truncation for turbofan engine health estimation. Int. J. Syst. Sci. **41**, 159–171 (2010)
29. Strohmeier, M., Schäfer, M., Smith, M., Lenders, V., Martinovic, I.: Assessing the impact of aviation security on cyber power. 8th International Conference on Cyber Conflict - Cyber Power (CyCon), May 31-Jun 03 2016 Tallinn, Estonia. 223–241. (2016)
30. Wang, H.K., Cheng, Y. Song, K.: Remaining useful life estimation of aircraft engines using a joint deep learning model based on TCNN and transformer. Comput. Intell. Neurosci. 2021, 5185938 (2021). https://doi.org/10.1155/2021/5185938
31. Wang, Q., Sun, C., Li, Y.L., Liu, Y.C.: Numerical simulation of erosion characteristics and residual life prediction of defective pipelines based on extreme learning machine. Energies **15**, 3750 (2022)
32. Wang, X., Li, Y., Xu, Y.X., Liu, X.D., Zheng, T., Zheng, B.: Remaining useful life prediction for aero-engines using a time-enhanced multi-head self-attention model. Aerospace **10**, 80 (2023)
33. Xie, C., Zhang, P., Yan, Z.: Correlation analysis of aeroengine operation monitoring using deep learning. Soft. Comput.. Comput. **25**, 551–562 (2021)
34. Yuan, M., Wu, Y.T., Lin, L., IEEE.: Fault diagnosis and remaining useful life estimation of aero engine using LSTM neural network. IEEE/CSAA International Conference on Aircraft Utility Systems (AUS), Oct 10–12 2016 Beijing, Peoples R China. 135–140. (2016)
35. Zhang, H., Liu, E.H., Zhang, B., Miao, Q.: RUL prediction and uncertainty management for multisensor system using an integrated data-level fusion and UPF approach. IEEE Trans. Ind. Inf. **17**, 4692–4701 (2021)
36. Zhang, J.S., Jiang, Y.C., Wu, S.M., Li, X., Luo, H., Yin, S.: Prediction of remaining useful life based on bidirectional gated recurrent unit with temporal self-attention mechanism. Reliab. Eng. Syst. Saf. **221**, 108297 (2022)
37. Zhang, Q., Liu, Q., Ye, Q.: An attention-based temporal convolutional network method for predicting remaining useful life of aero-engine. Eng. Appl. Artif. Intell. **127**, 107241 (2024)
38. Zhang, Z.G.: Evolution paths of green economy modes and their trend of hypercycle economy. Chin. J. Popul. Resour. Environ. **20**, 105860 (2022)
39. Zhao, C.Y., Huang, X.Z., Li, Y.X., Li, S.J.: A novel Cap-LSTM model for remaining useful life prediction. IEEE Sens. J. **21**, 23498–23509 (2021)
40. Zhao, K., Jia, Z., Jia, F., Shao, H.D.: Multi-scale integrated deep self-attention network for predicting remaining useful life of aero-engine. Eng. Appl. Artif. Intell. **120**, 105860 (2023)
41. Zhou, Z.K., Yang, L.C., Wang, Z., Yao, Y.T., IEEE.: Remaining useful life prediction of aero-engine using CNN-LSTM and mRMR feature selection. 4th International Conference on System Reliability and Safety Engineering (SRSE), Dec 15–18 2022 Electr Network. 41–45. (2022)
42. Zhu, J.Y., Ma, J., Wu, J.D.: A regularized constrained two-stream convolution augmented transformer for aircraft engine remaining useful life prediction. Eng. Appl. Artif. Intell. **133**, 108161 (2024)
43. Saxena, A., Goebel, K.: Turbofan Engine Degradation Simulation Data Set; NASA Ames Prognostics Data Repository. NASA Ames: Moffett Field, CA, USA (2008)

Publisher's Note Springer Nature remains neutral with regard to jurisdictional claims in published maps and institutional affiliations.