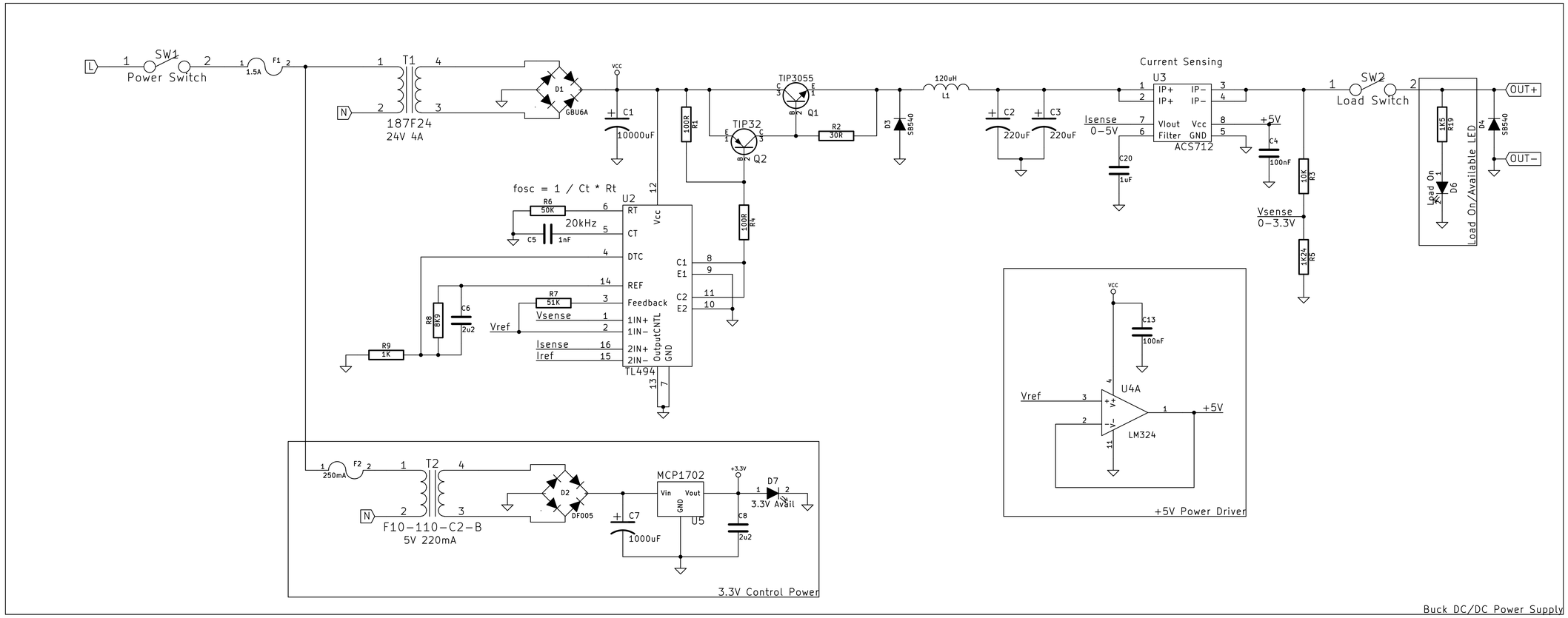

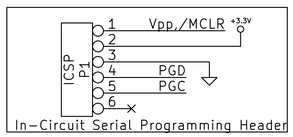

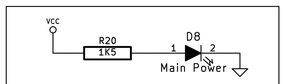

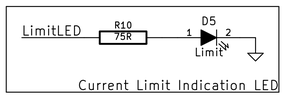

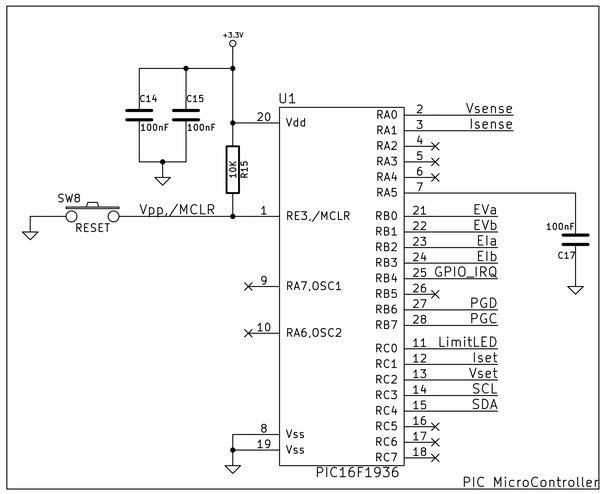

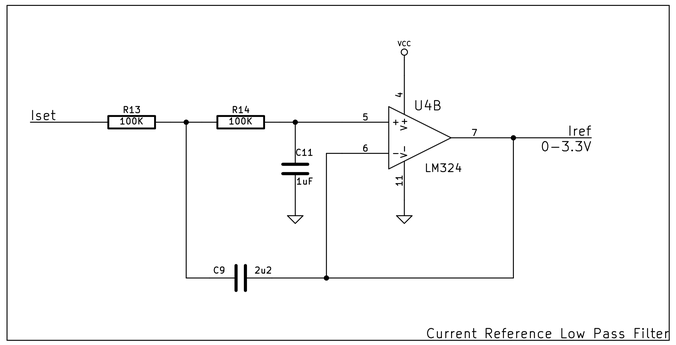

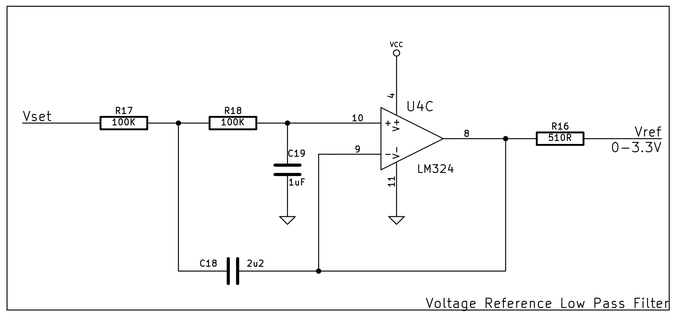

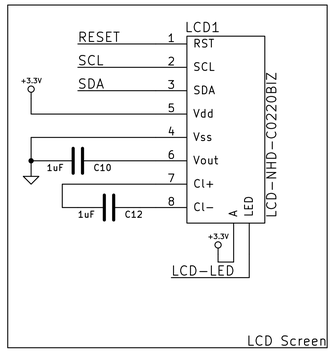

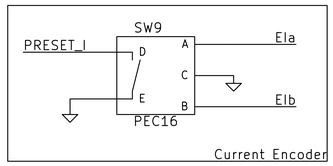

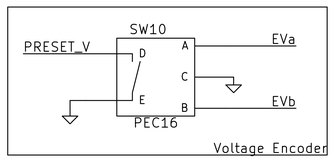

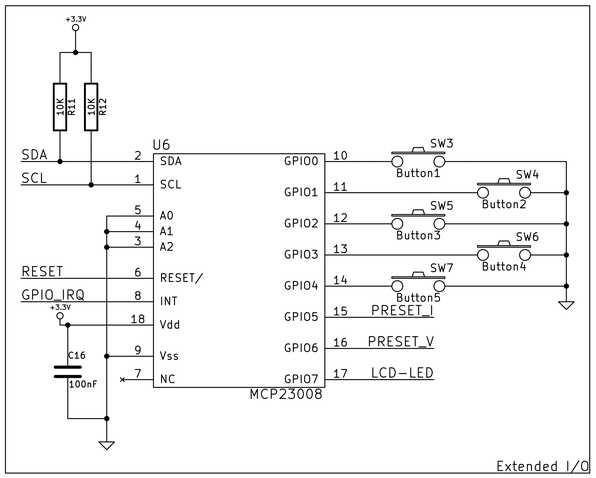

Skyler Brandt

AquaPic

File: 0-30V, 0-3A Adjustable Power Supply.sch

Sheet: /

Title: 0-30V, 0-3A Adjustable Power Supply

Size: A3	Date: 15 nov 2013	**Rev: 1**
KiCad E.D.A. eeschema (2013-05-31 BZR 4019)-stable		Id: 1/1