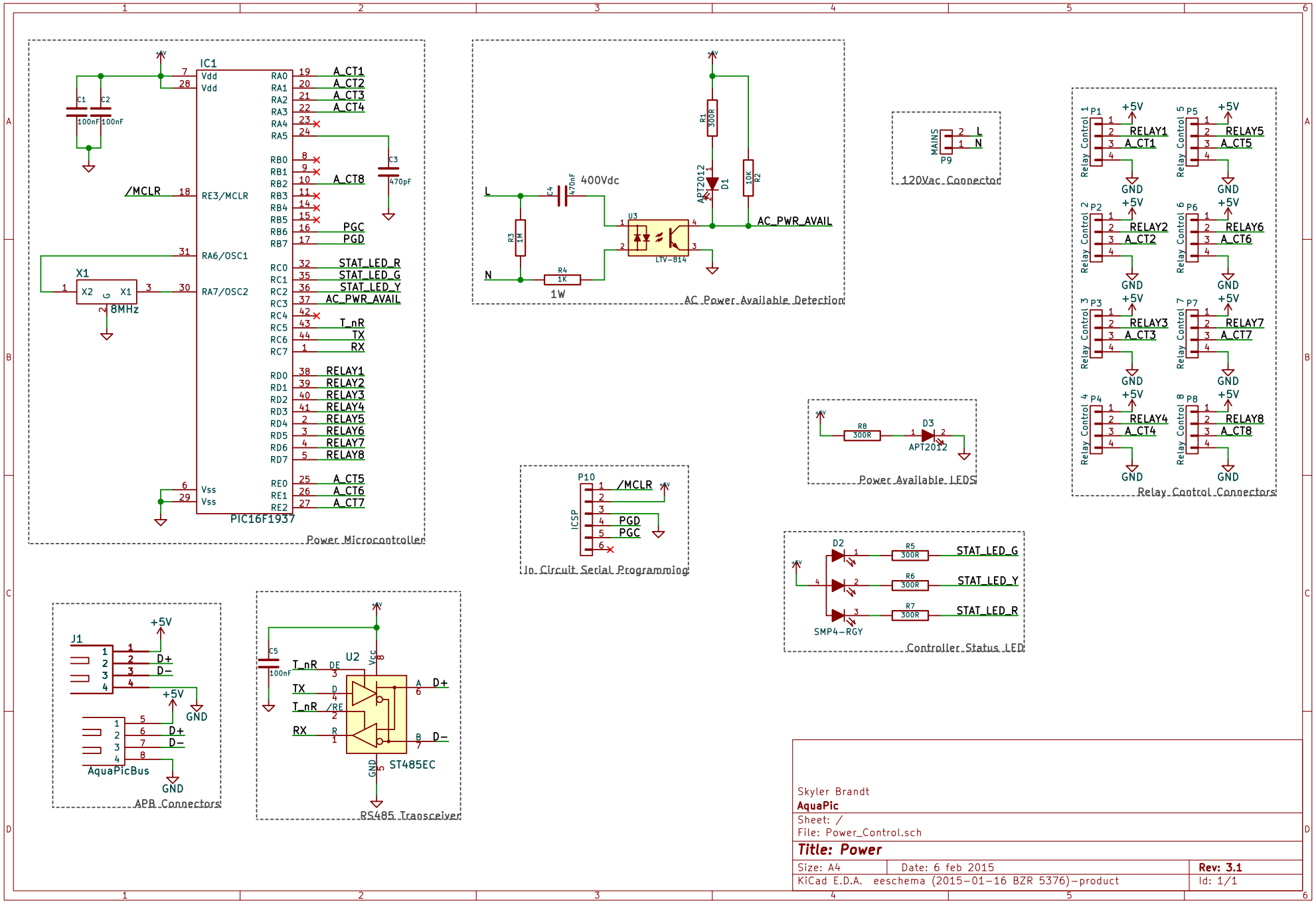

Skyler Brandt

AquaPic

Sheet: /

File: Power_Control.sch

Title: Power

Size: A4	Date: 6 feb 2015	**Rev: 3.1**
KiCad E.D.A. eeschema (2015-01-16 BZR 5376)-product		Id: 1/1