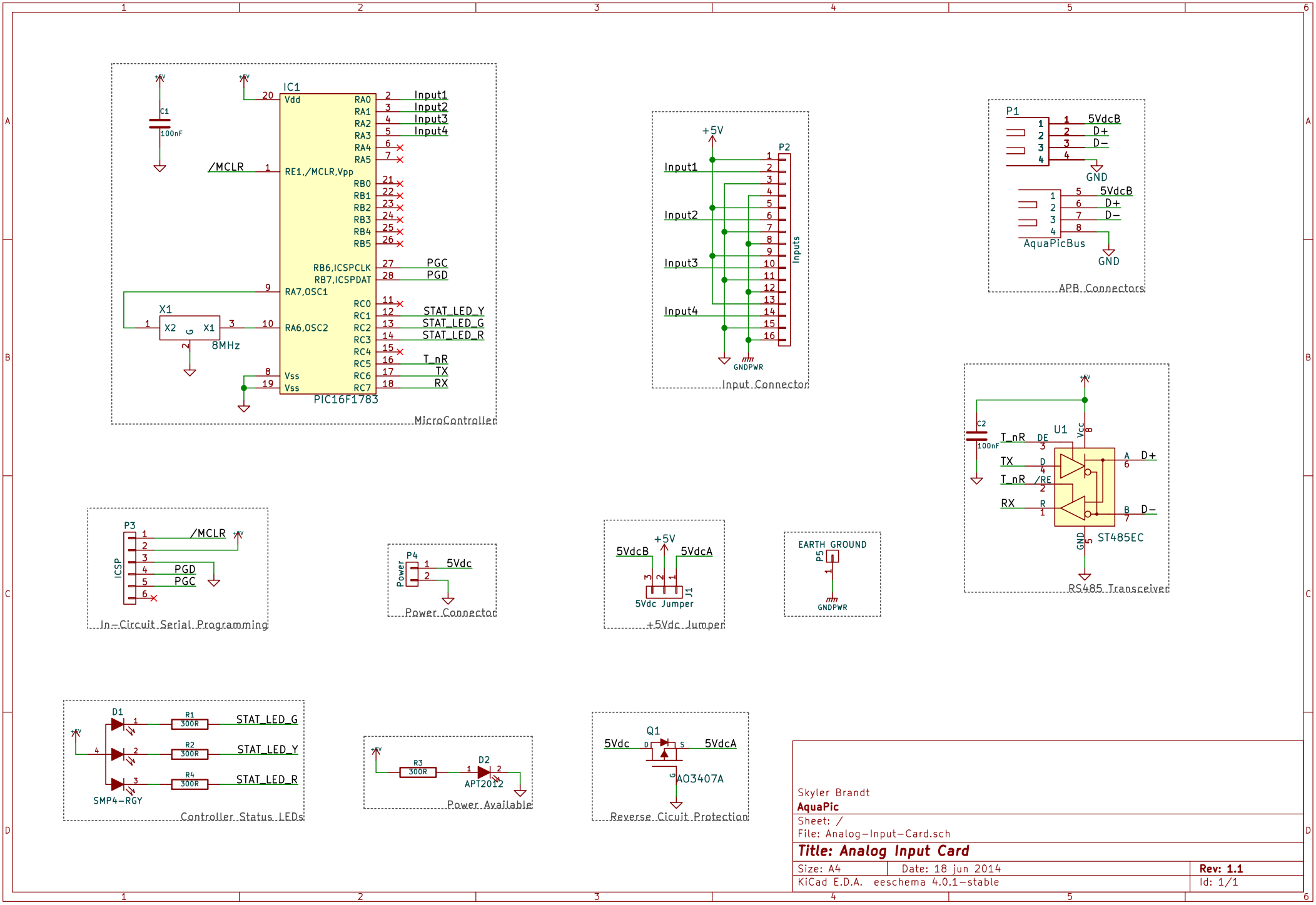
IC1
PIC16F1783
Vdd
Vss
Vss
RA0
RA1
RA2
RA3
RA4
RA5
RE1,/MCLR,Vpp
RB0
RB1
RB2
RB3
RB4
RB5
RB6,ICSPCLK
RB7,ICSPDAT
RA7,OSC1
RA6,OSC2
RC0
RC1
RC2
RC3
RC4
RC5
RC6
RC7
Input1
Input2
Input3
Input4
/MCLR
PGC
PGD
STAT_LED_Y
STAT_LED_G
STAT_LED_R
T_nR
TX
RX
C1
100nF
X1
8MHz
MicroController
+5V
P2
Inputs
GNDPWR
Input Connector
P1
5VdcB
D+
D−
GND
AquaPicBus
APB Connectors
C2
U1
Vcc
DE
/RE
A
B
GND
ST485EC
RS485 Transceiver
P3
ICSP
In−Circuit Serial Programming
P4
Power
5Vdc
Power Connector
5VdcA
J1
5Vdc Jumper
+5Vdc Jumper
EARTH GROUND
P5
D1
R1
R2
R4
300R
SMP4−RGY
Controller Status LEDs
R3
D2
APT2012
Power Available
Q1
AO3407A
Reverse Cicuit Protection
Skyler Brandt
AquaPic
Sheet: /
File: Analog−Input−Card.sch
Title: Analog Input Card
Size: A4
Date: 18 jun 2014
Rev: 1.1
KiCad E.D.A. eeschema 4.0.1−stable
Id: 1/1