Electronics design III
Exercise work

Design of Operational Transgonductance Amplifier in 45 nm CMOS Technology

General

The goal of the design work is to design OTA amplifier, which is shown in Fig.1, according to the specification. In addition your task is to design suitable bias circuit for OTA (use the same bias circuit as have been used in electronics design II. **The bias circuit consists of a resistor which can be thought to be an off-chip resistor so you don't have to add it to your layout). In addition, a load capacitance is a high capacitive load at the input of the next stage so it can be added only to the test bench of simulation.**

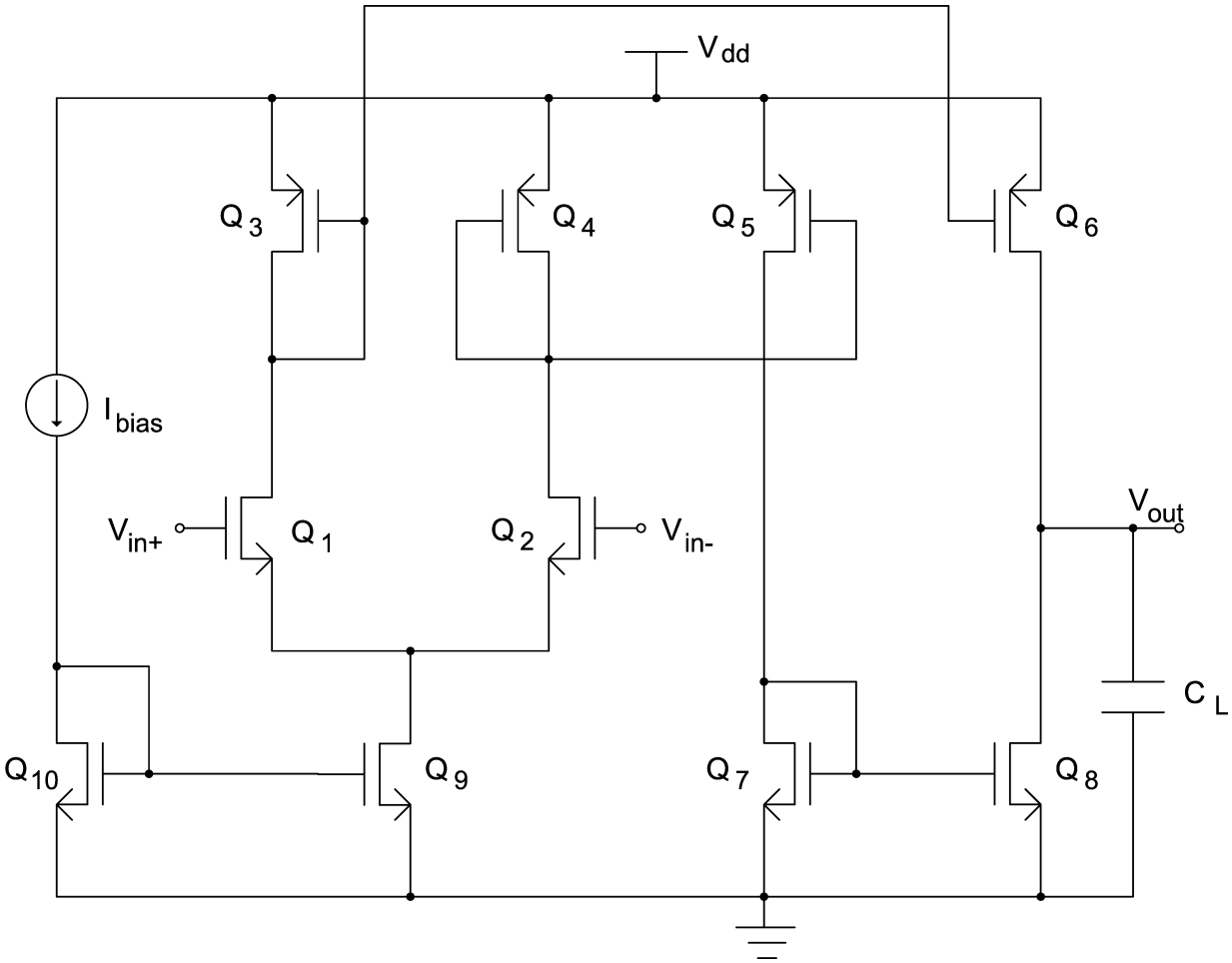

Fig 1. OTA.

The design work is done by using Cadence IC design environment. Technology used is 45 nm generic CMOS technology.

1. Phases of the design work

1. Define the parameters/values of the component using the small signal equation of the

MOS transistors and the specification of the OTA (g_m, C_{gs}, r_{ds}, I_d and etc.) In addition you need to solve the equation of the amplifier gain, SR and etc to define sizes and parameters of the components. This have to be done by using hand calculation. Define also the current of the bias circuit to be suitable for the OTA. (use the bias circuit used in the design work of Electronics design II).

2. Simulate the amplifier to check that specifications are achieved. Use AC, DC and transient simulation (help from design work of Electronics design II).
3. Draw the layout of the circuit. Use good practice when drawing layout: matching, size, etc. Make the necessary checks for layout (DRC, Design Rule Check and LVS, Layout Versus Schematic).
4. Final task is to make Post-layout simulations to analyze the effect of parasitic capacitances and resistances.
5. **Report has to give simulation results which show that specifications can be achieved. In addition, figures of the schematic and layout have to attached on the final report. Attach also the figures which shows the DRC and LVS summary that show you have successfully complete those. The results of the post-layout simulation have to be compared to schematic ones.**

2. Specifications of the OTA

Specification of the OTA is presented in Table 1. In addition the output load capacitance is 10 pF. Negative power supply is 0 i.e. gnd.

Table 1.

Vdd	3 V
Gain A	>39 dB eli >90 V/V
Unity gain bandwidth ft	>10 MHz
Slew rate SR	>10 MV/s
Phase margin PM	>60º
Output linear range	[0,6 – 2,2]
Input common mode range	[1,5 – 2,3]
Input to output current ratio K	2

Process parametres used in hand calculation is shown in Table 2.

Table 2. Process parametres

	V_t (V)	**$K_p = \mu \cdot C_{ox}$ ($\mu A/V^2$)**	**λ (@ L=3um)**
NMOS	0,49	300	0,06
PMOS	-0,51	250	0,056
C_{ox}	**5 fF/ μm^2**		

2.1 Designing OTA-amplifier

You can find information how to design OTA- amplifier on the course book ”*Analog integrated circuit design, D.A. Johns and K. Martin”* on the chapter 6.5 and Exercise 2 task 3. Hand calculations are rough estimations and the simulator uses more accurate equations and models. So by hand calculation the designer can find approximate values and the simulator is used to define more accurate values to achieve specification. Hand calculations are helpful to understand the operation of the circuit so that a designer can modify easier the performance by chancing the right parameters to find out proper result when using simulator.

When you are sizing the parameters use smaller or bigger values than the specifications gives, for example ft = 12 MHz and SR = 12 MV/s

At the beginning define the g_m of the input transistor by using the equation of the ft of the OTA. Use the equation of the SR to solve the wanted bias current. When you know the bias current and g_m of the circuit, the W/L of the input transistor can be solved (USE L = 0.4um when sizing the input transistors). After that you can use the equation of the gain of the OTA to solve r_{out} of the OTA and thus you can solve also the L of the output transistor (USE L = 3um when sizing the output transistors). With output linear range the W of the output transistors can be solved (You can also use some small W/L ratio for example 2 or 3 at the output and check if it will give prober output linear range. Minimum W/L ratio is placing non dominant poles at the higher frequencies and thus this procedure will give the best PM). Using the specification of the input common mode range the minimum size of the diode connected PMOS transistors can be solved (Again you can now size those diode connected PMOS transistors based on current gain factor 2 and then calculate if input common mode range is achieved). Remenber also that lower limit of input common mode is affected by the size of the bias transistor. The amplifier has an one dominant pole at the output and three non-dominant poles. Among these three non-dominant poles, the one which located at the drain of the transistor Q3, has the lowest frequency.

Choose proper size and unit element for matched components already in schematic so that you can then easily make your layout. For example input transistors should be matched so if your size of the transistors 10/1 select unit element size 5/1 and connect two transistors parallel. You can select amoun of transistor in schematic as follows: *instance name* (below fig.): M0<x:0>, where x+1 is the amount of parallel components. In fig there is 2 transistor in parallel. Cadence do not understand net connected to this kind of transistor if you do not name it so name the net as follows:*Create->Wire Name* and write wanted net name and select net by mouse click. After that when schematic is ready make a symbol of it. Remember that only NMOS transistors can be matched together with NMOS transistors and PMOS transistors with PMOS for example differential input pair has to have matched component and M0 and M1 has to be matched and also PMOS transistors M3 and M4 has to be matched to have prober mirror factor. Section 2.3 Drawing a layout shows the basic idea of matching.

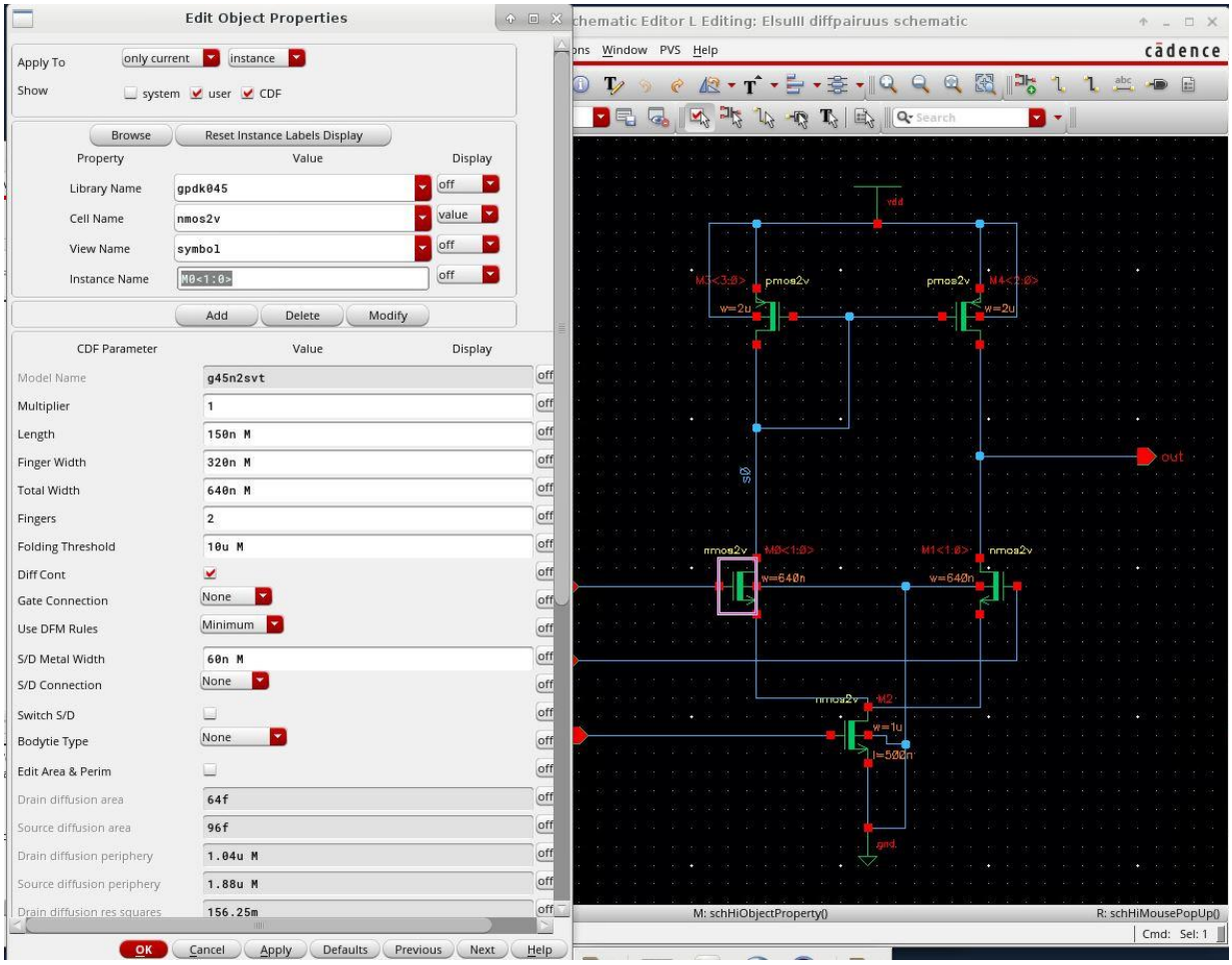

2.2 Simulations

After hand calculation the operation of the circuit is verified by simulation. Simulations are based on exercise work of the electronics design II and you can check those notes in Optima. Here is the required simulations which can be used to meet the specifications:

1. **DC-simulation is used to solve operating points.**
2. **AC-simulation is used to simulate PM and f_t and check the stability of the amplifier in all feedback factors.**
3. **Transient simulation is used to solve SR in step response.**
4. **Output linear range with DC-sweep.**
5. **Input common mode range with DC-sweep.**

2.3 Drawing the layout

After the simulation of the schematic, the layout of the amplifier and bias circuit can be drawn. About the IC-circuit functionality point of view it is very important how the layout is drawn. Good design practicies is shown below:

1. **matching** (minimization of the difference between matched devices)
2. **guard rings shielding** (minimization of the disturpances and cross-talks etc.))
3. **good floorplan** especially mixed-signal circuits (minimization of the disturpances and cross-talks etc.)
4. **placing pins** (minimization of the inductancies of the bonding wires)

The good reference is the book: *The Art of Analog Layout*. Also good practice can be found in course book and internet. In fig 1. general matching issues are presented.

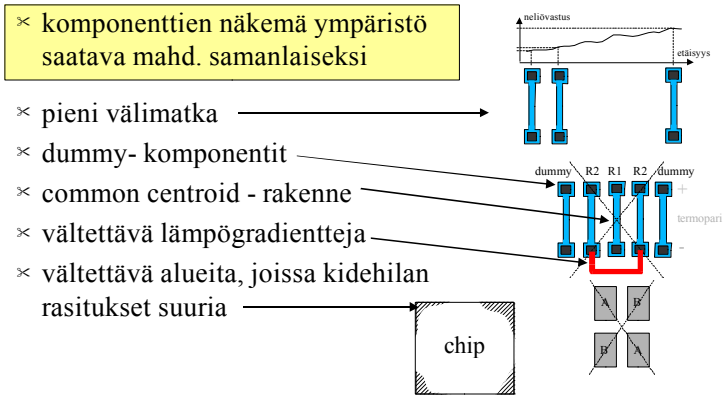

Fig. 1. matching

NOTE! You have to use at least Dummy and common-centroid structures! So already in schematic divide matched devices to several parallel unit elements which you can then laid out using common centroid structures.

In Fig. 2 one example of the common centroid structure is shown where two matched MOS transistors (W1=2 um, W2= 16 um and L1,2 are same). Now the best solution is to divide the bigger transistor to 8 part so that the width of the unit element is 2 um. Thus all transistors are equal in size and now the bigger transistor have to be formed by connecting those eight in parallel. To achieve common centroid structure the smaller transistor is placed in middle and eight unit elements of the bigger transistor is placed next to it on the both side as shown in fig. 2. To achieve even better matching dummy transistors should be placed both side of the row and the size of the dummies should be same as matched unit element. All terminals of the dummies should be connected to vdd or gnd depending on the type of the transistor (PMOS or NMOS, respectively).

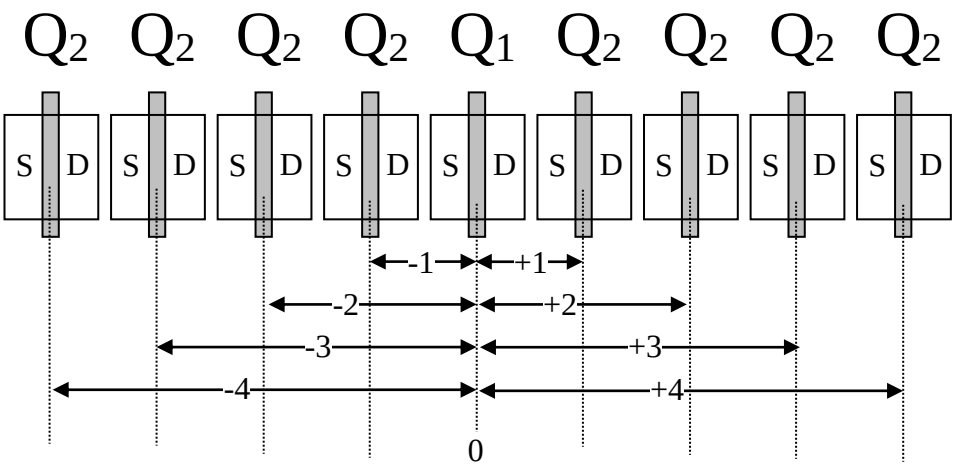

p1=0
p2=((-4)+(-3)+(-2)+(-1)+1+2+3+4)/8=0

ts. p1=p2 ≡ common-centroid

One-sentence explanation (memorize this)
Common-centroid layout places matched devices symmetrically so that process gradients cancel, resulting in superior matching and stable analog performance.

Fig. 2. Example of the common-centroid structure.

In Fig. 3 common-centroid structure with dummy gate is presented. There is two equal size transistors. This structure is suitable for transistors which have even number unit element. Also structures which have more rows arw possible when for example more unit elements structure is used.

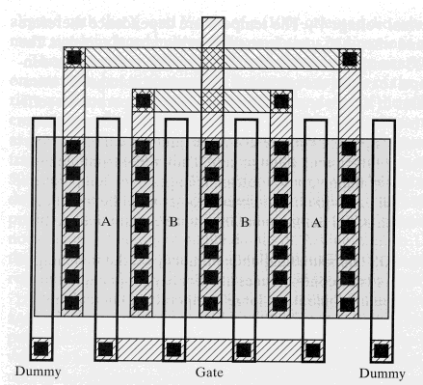

Fig. 3. Common-centroid –MOS with dummy-gate.

2.4. Layout checks.

After finishing the layout a couple of checks should be made. The first one is DRC (design rule Checks). DRC checks that all drawn layers are suitable for fabrication. For example that two metal layers are suitable distance to each other. During layout phase it is good practice to make DRC ones in while when working to see if some components are too close each other.
After finishing layout and error free DRC designer have to make LVS-check (Layout Versus Schematic). LVS checks that schematic and layout are matched.

2.5. Post-layout-simulation

Post-layout simulation is used to verify that circuit is also working properly with parasitic capacitances and resistances. Before post-layout simulation parasitic components have to be formed using QRC in Cadence. Needed post-layout simulation in this work is shown below:

1. **AC-simulation used to simulate f_t and phase margin with all possible feedback factor ie. with unit feedback.**
2. **Step response with transient simulation to see SR.**

Compare results to schematic simulations.