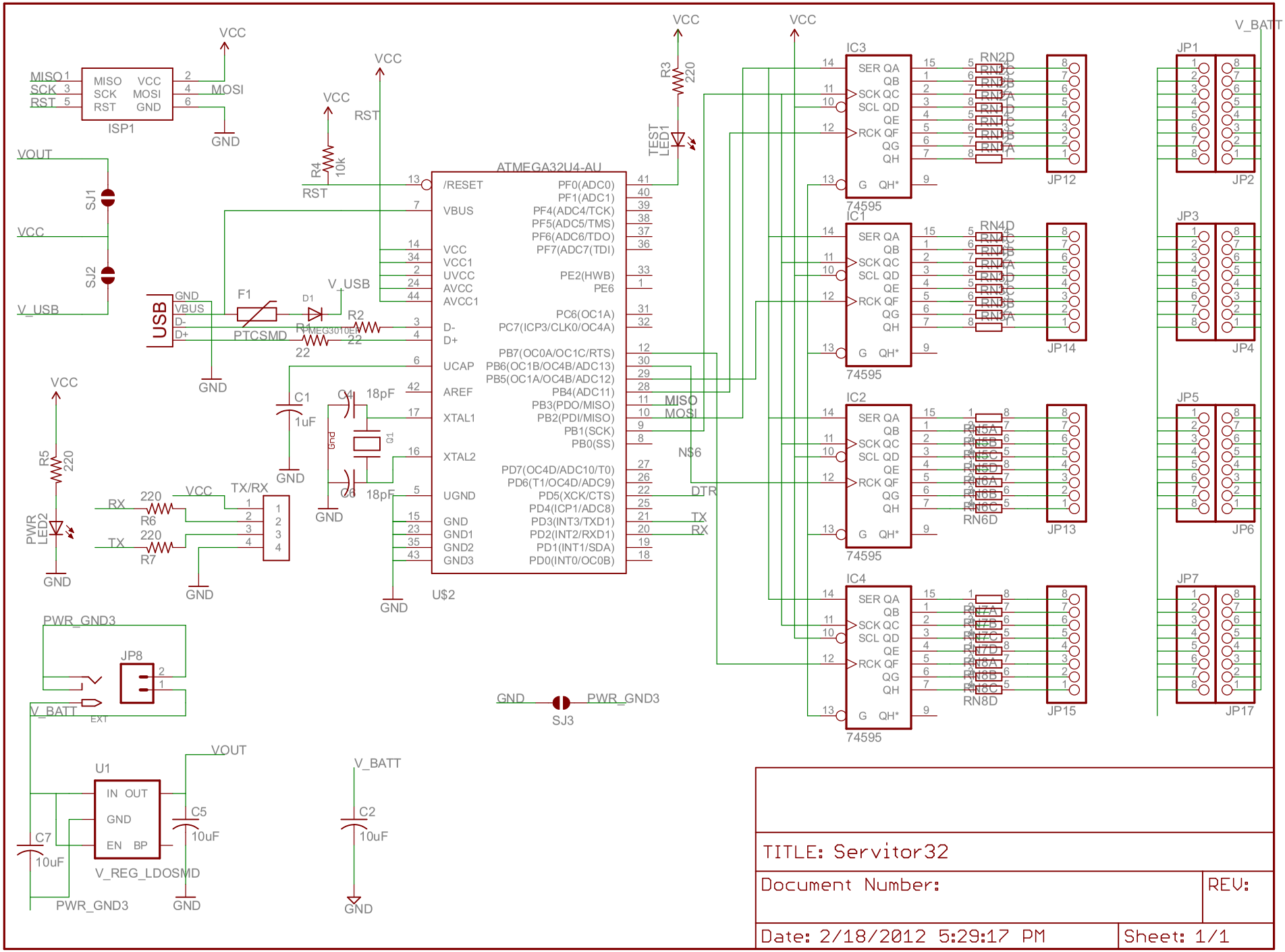

TITLE: Servitor32

Document Number:

REV:

Date: 2/18/2012 5:29:17 PM

Sheet: 1/1