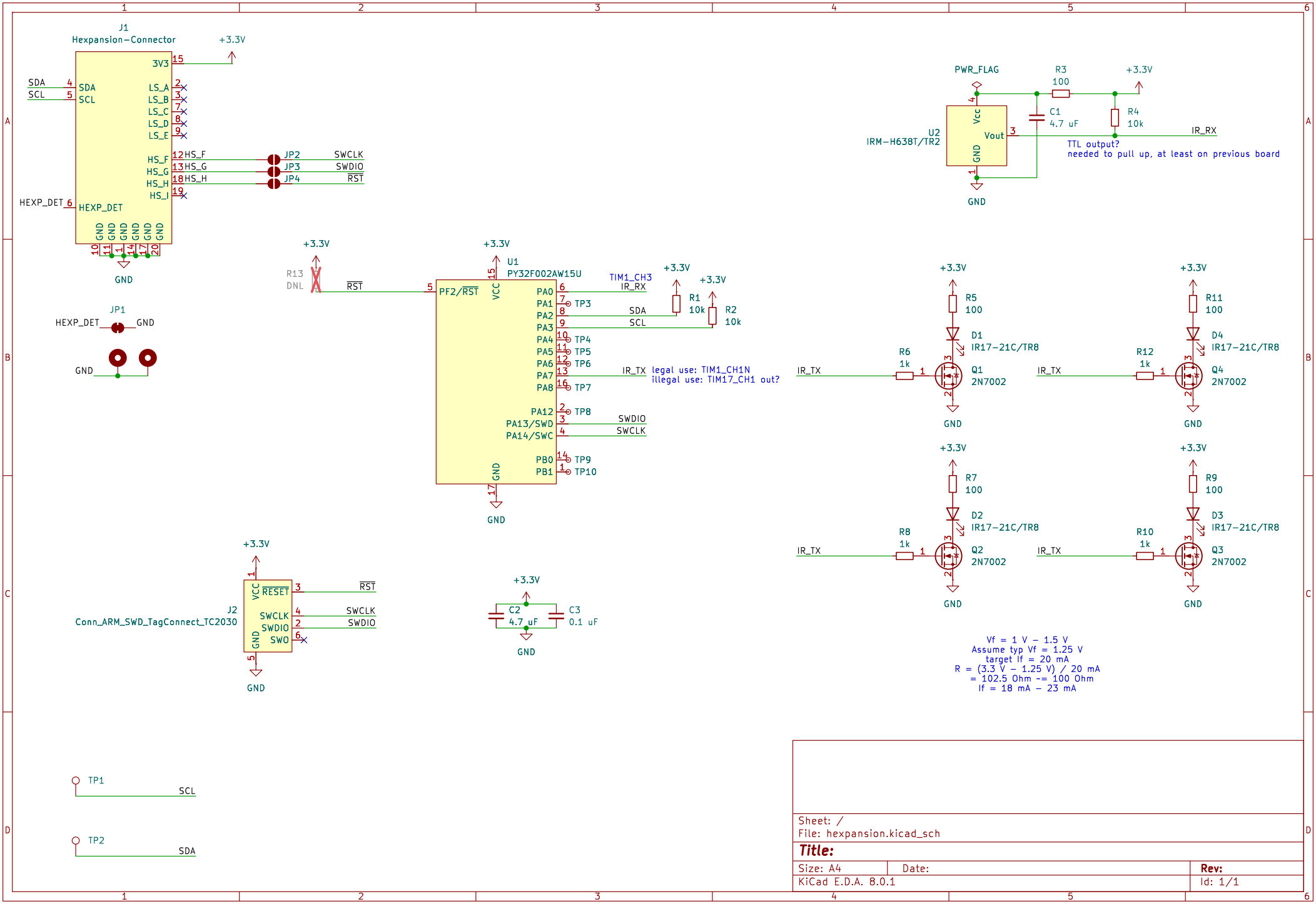
J1
Hexpansion-Connector
+3.3V
3V3
SDA
SCL
LS_A
LS_B
LS_C
LS_D
LS_E
HS_F
HS_G
HS_H
HS_I
HEXP_DET
GND
JP2
JP3
JP4
SWCLK
SWDIO
RST
PWR_FLAG
R3
100
R4
10k
C1
4.7 uF
U2
IRM-H638T/TR2
Vcc
Vout
IR_RX
TTL output?
needed to pull up, at least on previous board
R13
DNL
U1
PY32F002AW15U
PF2/RST
VCC
PA0
PA1
PA2
PA3
PA4
PA5
PA6
PA7
PA8
PA12
PA13/SWD
PA14/SWC
PB0
PB1
TIM1_CH3
TP3
TP4
TP5
TP6
TP7
TP8
TP9
TP10
R1
10k
R2
10k
legal use: TIM1_CH1N
illegal use: TIM17_CH1 out?
JP1
R5
100
D1
IR17-21C/TR8
R6
1k
Q1
2N7002
R11
100
D4
IR17-21C/TR8
R12
1k
Q4
2N7002
R7
100
D2
IR17-21C/TR8
R8
1k
Q2
2N7002
R9
100
D3
IR17-21C/TR8
R10
1k
Q3
2N7002
J2
Conn_ARM_SWD_TagConnect_TC2030
RESET
SWO
C2
4.7 uF
C3
0.1 uF
Vf = 1 V - 1.5 V
Assume typ Vf = 1.25 V
target If = 20 mA
R = (3.3 V - 1.25 V) / 20 mA
= 102.5 Ohm ~= 100 Ohm
If = 18 mA - 23 mA
TP1
TP2
Sheet: /
File: hexpansion.kicad_sch
Title:
Size: A4
Date:
Rev:
KiCad E.D.A. 8.0.1
Id: 1/1