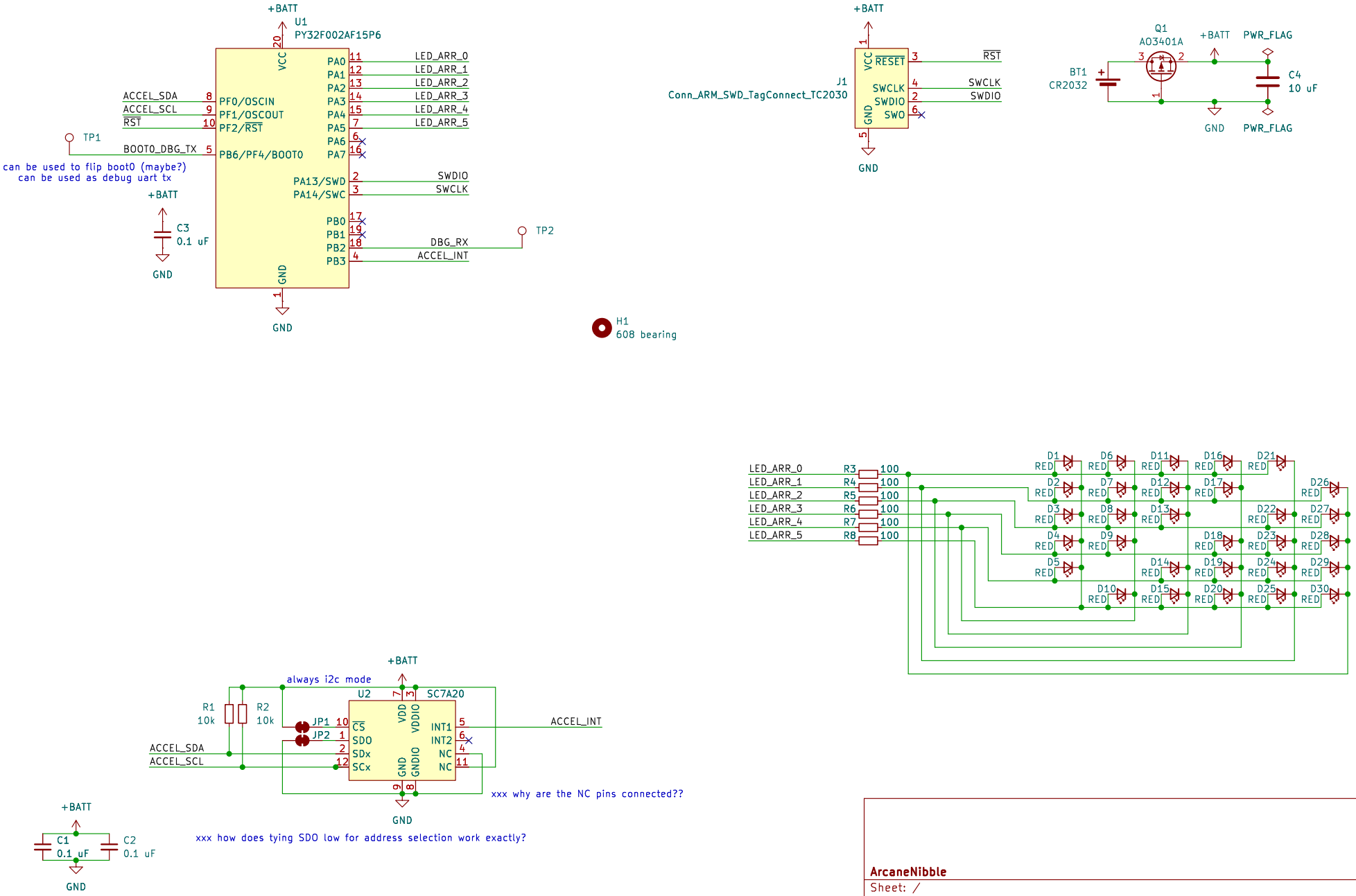


**ArcaneNibble**

Sheet: /

File: puya-spinner.kicad_sch

**Title: PY32 POV spinner demo**

| | | |
|---|---|---|
| Size: A4 | Date: 2024-08-18 | Rev: A |
| KiCad E.D.A. 8.0.1 | | Id: 1/1 |