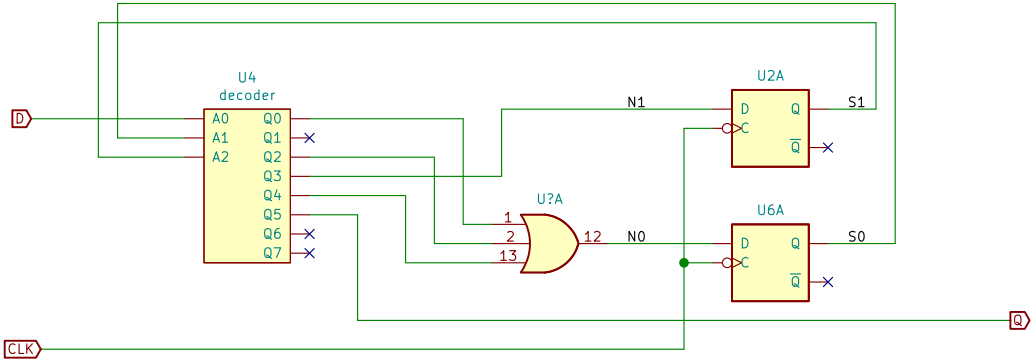

Sheet: /
File: fsm.sch

Title: Mealy Message Recognizer

Size: User	Date:	Rev:
KiCad E.D.A. kicad 5.1.5+dfsg1-2build2		Id: 1/1