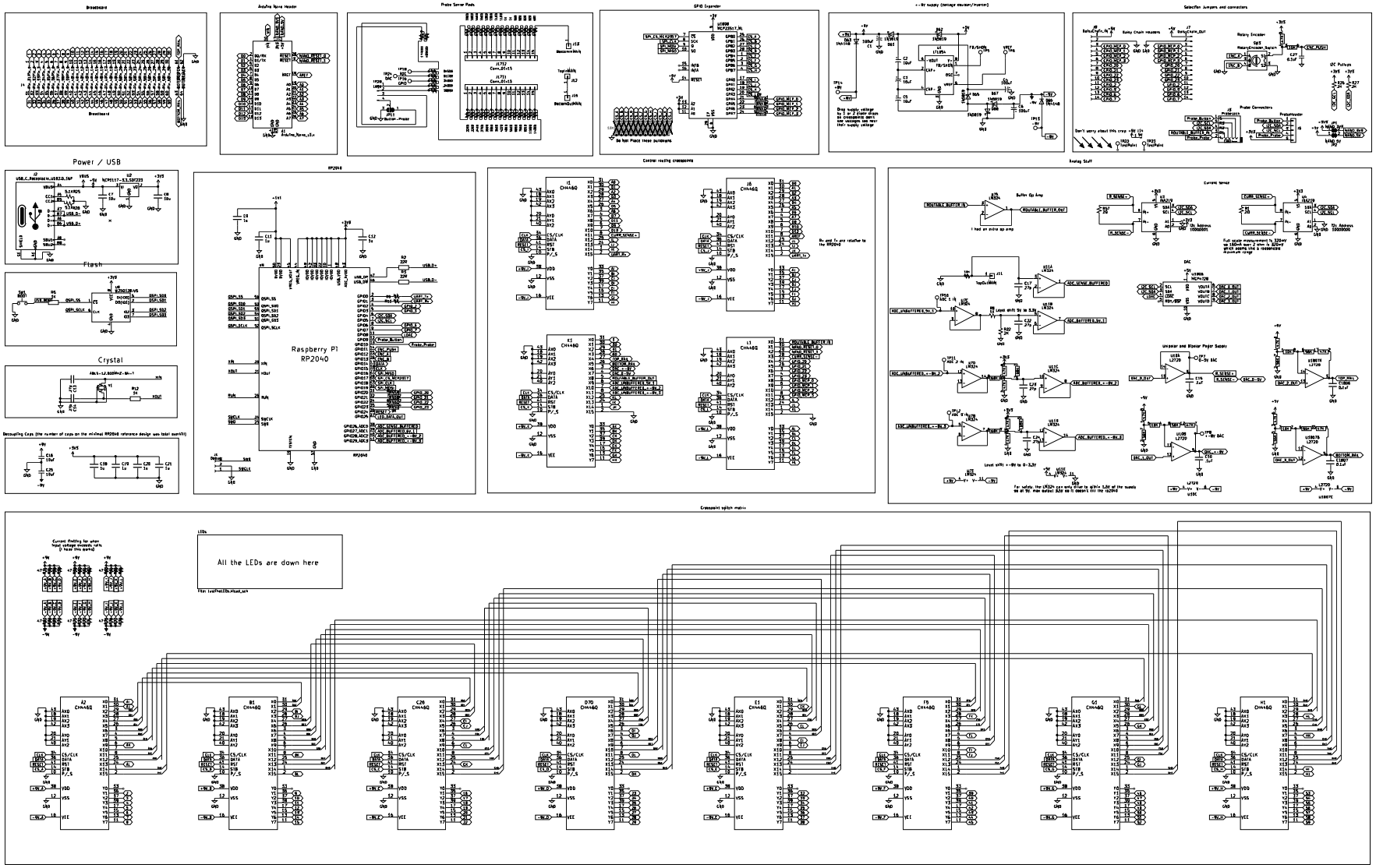

KevinCappuccio Kevin Santa Cappuccio Antihydrohs Tim Sheet: / File: JumperlessV5mini.kicad_sch	
Title: Jumperless V5	
Size: A1 Date: 2024-06-15	Rev: 5.2
KiCad 7.0.9, 8.0.2-1	Id: 1/2

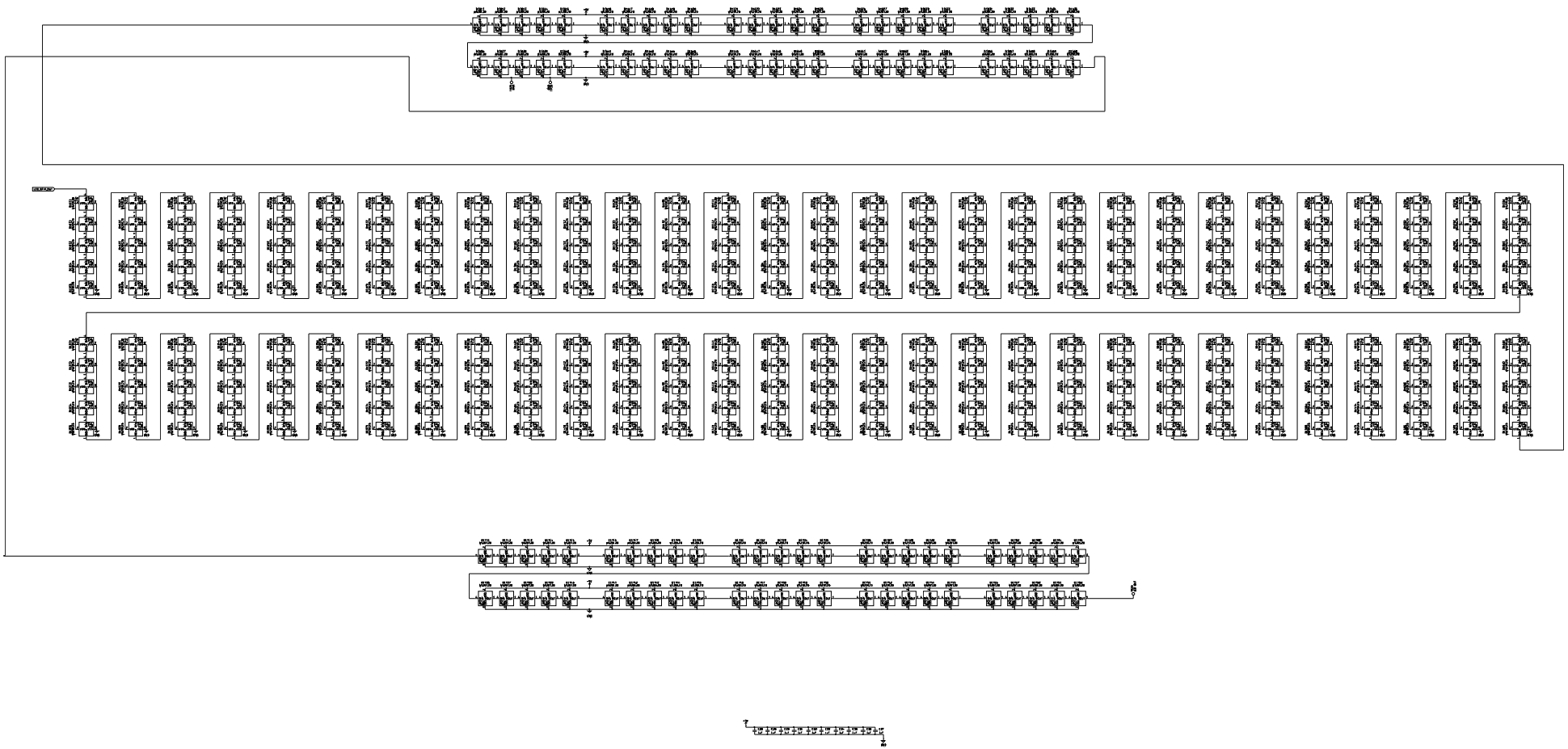

Key-Cabeza/A
Key-Serie Cabeza/A
Cabeza/A.Tos
Cabeza/A.Tos
File: AUTOCELDLMAS.LST
Title: Jumpertines V3
Date/Hr ____: 2001/05-06:23
Date/Fax Wait: ____ Rev/Ed
16 3/4