Sample Report for Laboratory #1: Basic Electrical Measurements and Modeling

Anthony S. Deese, Ph.D.
Electric Circuits Laboratory I (ENG214)
The College of New Jersey
Department of Electrical and Computer Engineering (ECE)

http://www.anthonydeese.com

Introduction and Background

(note: students should use the bullets below as a guide for their conclusion)

- **Objective(s):** The students should identify the objective of this experiment, in their own words. If one objective does not exist, define a small set of objectives.
- **Why is this Important?** – The students should describe why this experiment is important. Remember, that "because the teacher is making me for a grade" is not an acceptable answer. Perhaps the assignment will prepare students for future work in this or other courses.
- **Theory and Background** – The students should provide the reader with any background information relevant to understanding their report. Are there any schematics or equations that are relevant? Where are they?

Procedure and Analysis

(**note:** report should be written in third-person)

Step #1: The laboratory instructions ask the student team to determine accuracy and precision of their station's digital multi-meter (DMM) as defined by the manufacturer. As such, they performed a Google search for the appropriate datasheet (Agilent 34401A). The following values were provided.

(**note:** make sure to provide proper titles and column labels with units for all tables)

Table 1: Measurement Error vs. Measurement Type and Operating Point for Agilent 34410A Digital Multi-meter

Function	Operating Point	Measurement Error in % (at Room Temp)
DC Voltage	100mV	0.003
	1V	0.002
	10V	0.0015
	100V	0.002
	1kV	0.002
Resistance	100Ohm	0.003
	10kOhm	0.002
	1MOhm	0.002
	100MOhm	0.3
DC Current	10mA	0.005
	100mA	0.01
	1A	0.05
	3A	0.1

http://www.anthonydeese.com

(**note:** please list out all questions and answers for grading)

- **Question #1:** What is the overall measurement error when measuring voltage, current, and resistance? Is the error affected by the meter range?
- **Answer #1:** The average percentage errors for voltage, resistance, and current are 0.0015%, 0.002% and 0.01% respectively. However, a more accurate description is provided in Table 1. It is apparent that error is dependent on operating point because Table 1 is defined with consideration of operating point.

(**note:** discuss objective of the next step, test setup, and any relevant observations about it)

Step #2: Next, the laboratory instructions ask the student team to observe the measurement error of the Agilent digital multi-meter via utilization of a calibrated voltage regulator (available in the store room). They constructed a test setup composed of DC voltage source, 12V voltage regulator, and DMM. It is shown in the figures below. The voltage regulator has a predicted output of 11.9159V_{DC} (this value is assumed to be exact). The DC voltage source was set to output 14V_{DC}.

(**note:** provide illustrations of your work when possible)

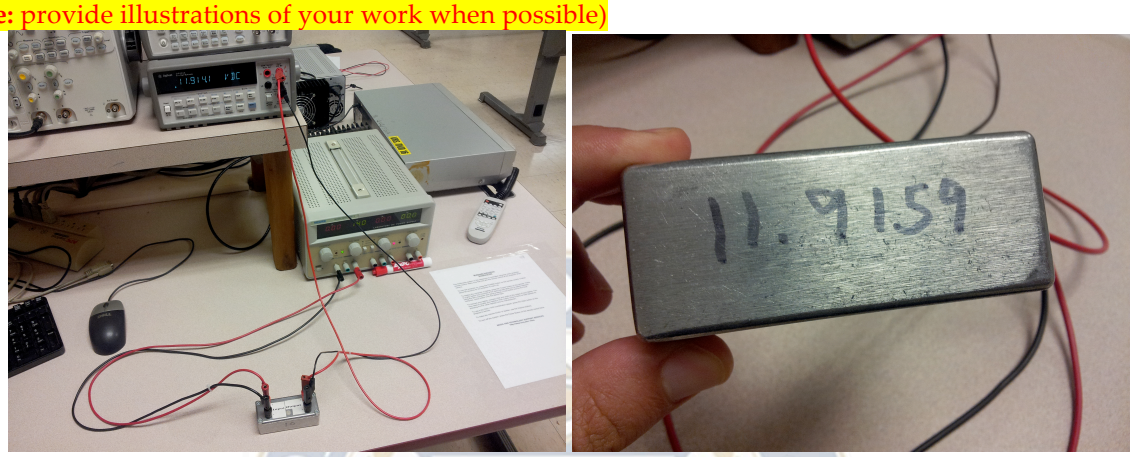

Figure 1: Voltage Regulator Test Setup Consisting of DC Power Supply, 12V Voltage Regulator (with Expected Output of 11.9159V_{DC}), and Digital Multimeter

(**note:** discuss your observations and show your calculations)

The student team observed a measured voltage of 11.9142V_{DC}. Using this value, measurement error is calculated below.

(1) measurement error = | expected – observed | / expected = | 11.9159 – 11.9142 | / 11.9159
measurement error = 0.0142665%

(**note:** highlight important points in bold and site sources of error)

- **Question #2:** Is the difference between measured voltage and the regulator's reference voltage with the expected measurement error range.
- **Answer #2:** This value of measurement error **is not within the expected range of 0.0015%** for voltage close to 10V. This excess may be attributed to mislabeling of the regulator's output voltage or need for calibration of the DMM.

Step #3: Skipped in example…

(**note:** state any and all equations you use in the lab)

Step #4: Next, the laboratory instructions ask the student team to deserve a voltage divider capable of accepting an 8V input and generating a 2V output with tolerance of 10%. For this purpose, they utilized the voltage divider model described below.

http://www.anthonydeca.com

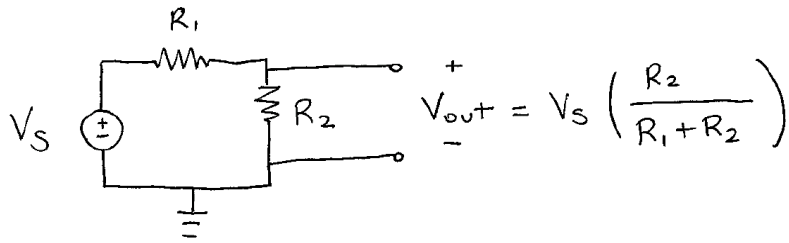

Figure 2: General Schematic for Voltage Divider

(2) Vout = Vin (R2 / R1 + R2)

The students utilize (2) to calculate the resistances R1 and R2 required to generate the appropriate input-output voltage ratio.

(3) $2V = 8V \left(\frac{R_2}{R_1 + R_2} \right)$ We will assume $R_2 = 1k$

defined source voltage

desired output voltage

$$2V = 8V \left(\frac{1000\Omega}{R_1 + 1000\Omega} \right)$$

$$2V(R_1 + 1000\Omega) = 8000\,V\Omega$$

$$2V \times R_1 + 2000\,V\Omega = 8000\,V\Omega$$

$$2V \times R_1 = 6000\,V\Omega$$

$$R_1 = 3000\,\Omega$$ ← solution for R_1

(**note:** hand-calculations are ok)

The students then determined the following values of R1 and R2 would attenuate Vin by ¼: R1 = 3*kOhm*, R2 = 1*kOhm*. Because the tolerance of these resistors is 10%, the expected error in the output voltage may be calculated as shown below.

http://www.anthonydeese.com

$$(4)\quad V_{out} = 8V\left(\frac{1000 \pm 100}{\underbrace{3000 \pm 300}_{R_1} + \underbrace{1000 \pm 100}_{R_2}}\right)$$

NOTE THAT FOUR CASES / EXTREMES EXIST

$$① \quad V_{out} = 8V\left(\frac{1000+100}{4000+400}\right) = 2V$$

$$② \quad V_{out} = 8V\left(\frac{1000-100}{4000+400}\right) = 1.6364V$$

$$③ \quad V_{out} = 8V\left(\frac{1000+100}{4000-400}\right) = 2.4445V$$

$$④ \quad V_{out} = 8V\left(\frac{1000-100}{4000-400}\right) = 2V$$

FOR 10% RESISTOR TOLERANCES, THE FOLLOWING RANGE EXISTS

$$V_{out} = \underbrace{1.6364V}_{18.1\%\ \text{error}} \rightarrow \underbrace{2.4445V}_{22.2\%\ \text{error}}$$

- **Question #4:** Calculate the expected error (+/- range from 2 volts) in the output voltage of the divider based on the tolerance of the resistors to justify your design.
- **Answer #4:** Equation (4) demonstrates that the expected range of output is **1.6364*V*DC to 2.4445*V*DC** for resistor tolerance of 10%.

(**note:** include measured values of all resistors)

Step #5: Next, the laboratory instructions ask the student team to construct the voltage divider as well as measure any and all resistance values. They utilized a DC voltage source, 1k (aka. 0.98710k) and 3k (aka. 2.9926k) resistors, and DMM. The DC source was set to 8V exactly. The students' test setup is shown below.

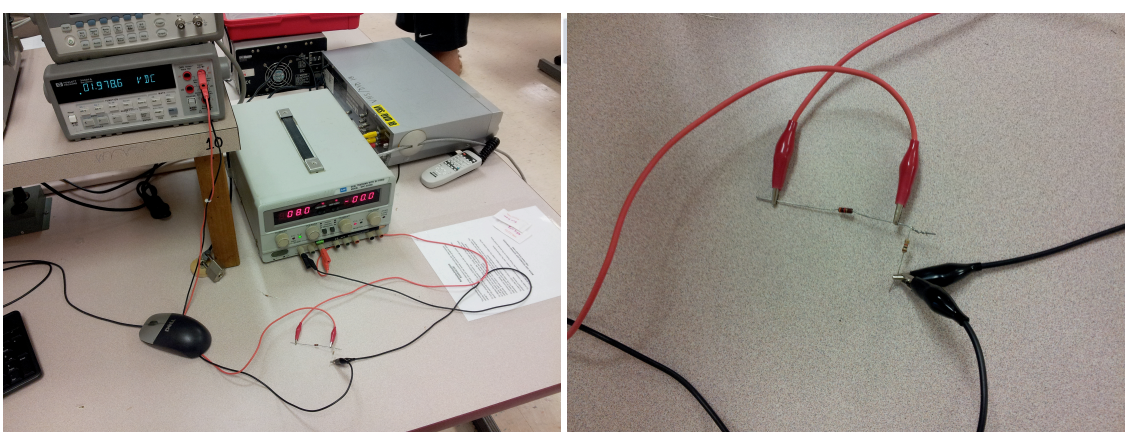

Figure 3: Voltage Divider Test Setup Described in Figure 2 Consisting of DC Power Supply, 0.98710*kOhm* and 2.9926*kOhm* Resistors, and Digital Multimeter

They calculate the expected value of the divider output to be 1.984033V_{DC}, calculated from (3). However, they actually observed an output of 1.9788V_{DC}.

(5) Vout = 8.0 (0.98710 / (0.98710 + 2.9926)) = 8.0 (0.248033) = 1.98427V_{DC}

- **Question #5:** How does the voltage measured compare with the calculated voltage based on the nominal resistor values and the measured resistor values?
- **Answer #5:** An error of **0.284**% is calculated in (6), below.

error = | expected − observed | / expected

the group calculated output of ~~1.9788~~ V_{DC} 1.984033

the group observed output of 1.9788V_{DC}

error = | 1.984033 − 1.9788 | / 1.984033

error = 0.00284 = 0.284 %

(6)

(**note:** draw schematics when necessary)

Step #6: Next, the laboratory instructions ask the student team to examine how the multi-meter affects the voltage divider circuit. As such, they drew the schematics below that, unlike others, consider the internal resistance of the DMM.

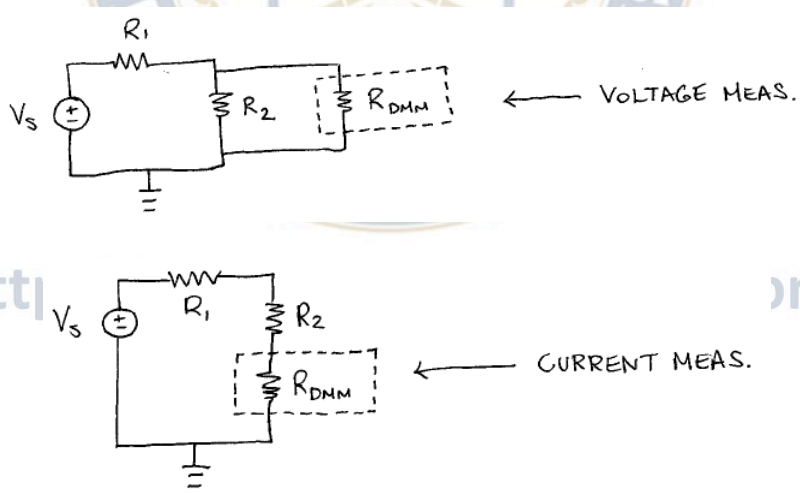

Figure 4: Schematics Demonstrating the Effect of Measurement Resistance (aka. Internal Resistance of the DMM) on Output Voltage of Voltage Divider Circuit

Next, they defined the output of the voltage divider with consideration of R_{DMM} for both voltage and current (7) measurement cases.

$$V_{out} = V_s \left(\frac{R_2 \| R_{DMM}}{R_1 + R_2 \| R_{DMM}} \right)$$

$$V_{out} = V_s \left(\frac{R_2 + R_{DMM}}{R_1 + R_2 + R_{DMM}} \right)$$

this equation assumes placement of R_{DMM}

(7)

(**note:** sometimes you need to think independently and determine what figure or graph illustrates idea)
Next, they graphed these relationships to demonstrate how RDMM affects gain in both voltage and current measurement case. The configuration and parameters shown in **???** are assumed.

(**note:** the title should read – dependent variable vs. independent variable for circuit X with parameters Y, Z, etc…)
(**note:** a graph should have axis labels with units as well as proper legend, if needed)

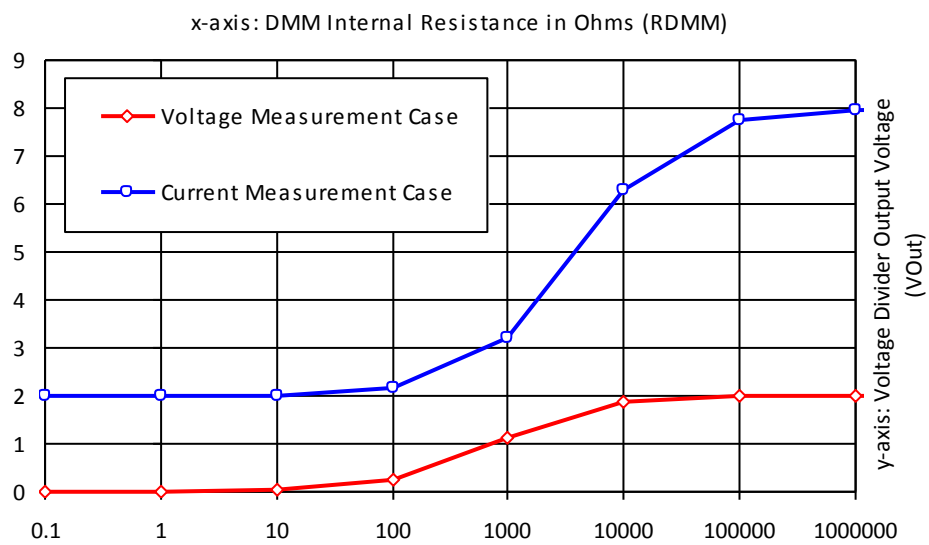

http://www.anthonygeese.com

Figure 5: Output Voltage (V_{out}) vs. DMM Internal Resistance (R_{DMM}) for both Voltage and Current Measurement Cases of the Voltage Divider Shown in Figure 2 with R1 = 3*kOhms* and R2 = 1*kOhms*

- **Question #6:** How does the multi-meter affect (load) the circuit when used as a voltmeter? What would be the affect of a load resistance on your voltage divider's performance? Over what load resistance range could your voltage divider's design specification (+/- 10%) be maintained?
- **Answer #6:** When used as a voltmeter, the ideal value of the DMM's internal resistance is infinity. Figure 5 demonstrates that **as RDMM drops from infinity, the output of the voltage divider drops to zero.** From examining this graph, it seems as if the voltage divider could maintain an output with 10% of the desired (2*V*) for **any value of R_{DMM} greater than 10k.**

Step #7: Next….

Conclusion

(note: students should use the bullets below as a guide for their conclusion)

- **Background and Research:** The students should describe areas that they studied in order to complete the lab report. In this paragraph, they should refer heavily to **specific schematics and theoretical equations** in the body of the report by equation and figure number.
    - In the students' eyes, what were the **objective(s)** of the laboratory experiment?
- **Hypothesis:** If one exists, clearly state the hypothesis of your experiment.
- **Procedure:** The students should discuss the steps they took to complete the lab. In this paragraph, they should refer heavily to **specific schematics and test setup photos** in the body of the report by figure number.
    - What **problems** did students encounter? Examples include equipment failure or problems with the lab document.
    - What **suggestions** do students have? Examples include changes to the test setup or utilization of more advanced analysis techniques.
    - What step in the lab did the student find **most interesting**?
- **Analysis and Results:** The students should discuss the quality of their results as well as conclusions to be drawn from them. In this paragraph, they should refer heavily to **specific tables and graphs** in the body of the report by figure number.
    - Did the lab generate **viable results**? Can the experimenter distinguish trends from noise and other random forces? Why?
    - Does observed data **match the expected** (generating via theoretical calculation or simulation)? If not, what potential **sources of error** exist? For example, does the experiment require components with lesser parameter tolerances.
    - What is the student's **most interesting** observation from the data? Why?
- **Closing Ideas:** The students should tie together ideas from the different sections described above. They should address higher-level concepts directly related to the lab's hypothesis (if applicable) as well as its effect on their education and understanding of electrical engineering.
    - What lessons do students **take away** from this experiment?
    - How will this experiment help students excel in the lecture of this as well as **future classes?**
    - What are the students' **most positive and negative** comments regarding this experiment?

In this lab assignment, the student team examines several introductory topics in the field of electrical engineering including utilization of laboratory hardware, voltage and current measurement, voltage division, battery storage, and system modeling. And, because many of these topics had not yet been addressed in lecture, the students were required to perform background research and acquire the models presented in Figure 2 as well as (1) and (2). The main objective of this laboratory assignment is introduction to the field of electrical engineering; as such, students were required to perform a number of diverse yet relevant tasks.

The student team performed, essentially, four tasks: 1) observe the measurement error of the digital multi-meter, 2) design and implement a resistive voltage divider, 3) quantify the effect of measurement resistance on a basic electrical system, and 4) test and model a basic AA battery. They encountered minimal difficulties in completing this assignment. However, it should be noted that the measurement error of the DMM in Armstrong 128 is significantly higher than the expected. This may be observed from comparison of Table 1 and (1). Because the team was initially confused by this unexpected result, they performed this same step several times, slowing their progress. The student team has several suggestions to improve this assignment in the future. One suggestion is to reevaluate the length of the assignment; it was difficult for students with minimal experience in circuit design and implementation to complete the

http://www.anthonydeese.com

procedure in two weeks (as required). A second suggestion is to possibly reorder the steps. Many students in the first week of the class do not have a prototyping circuit board and, as such, have difficulty completing steps #4 through #7. Perhaps, they could be moved to the end. The student team especially enjoyed the work completed in step #13. It was very interesting to observe, over 15 minutes, exactly how the performance of a battery degrades with time as it loses energy.

Overall, the quality of the students' results for assignment #1 is high. They did not acquire any data that lacked order or was dominated by stochastic processes like noise. The student team present their observations related to: 1) measurement error of the digital multi-meter in (1), 2) performance of a resistive voltage divider in (5) and (6), 3) the effect of measurement resistance on this voltage divider in Figure 5, and 4) the short as well as long-term behavior of an AA battery in Figure X. Overall, their observations matched the expected or theoretical values. One exception, however, is the measurement error of the digital multi-meter itself, an issue is discussed in the paragraph above. Throughout the course of this assignment, the student team realized that several sources of error including: 1) excessive measurement error associated with DMM, 2) tolerance of component parameters associated with voltage regulator and resistors, and 3) human error. Because they are learning about proper construction of electric circuits, the students still cause many of the erroneous data points they observe. This laboratory assignment has given the team a number of skills etc…

THE COLLEGE OF NEW JERSEY
http://www.anthonydeese.com