REVISION RECORD			
LTR	ECO NO:	APPROVED:	DATE:

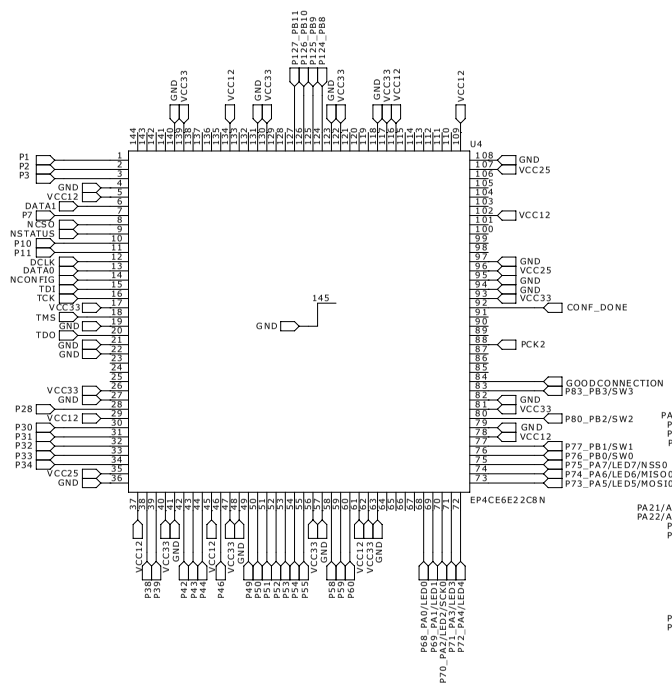

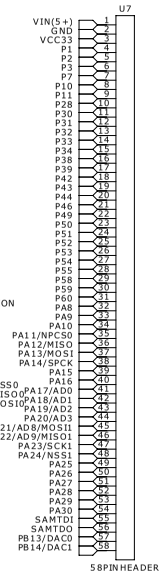

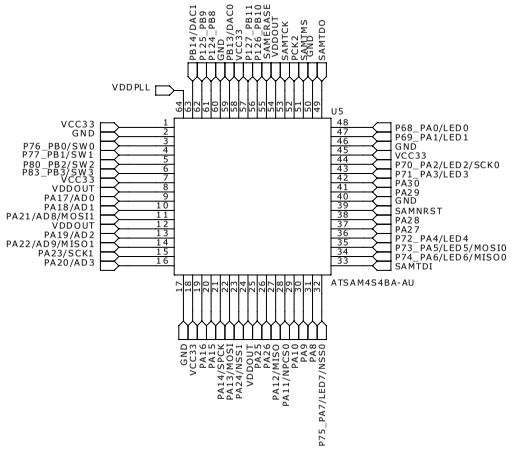

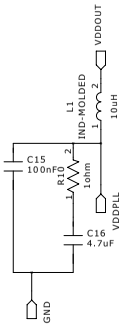

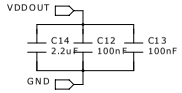

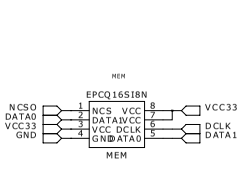

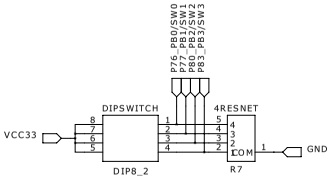

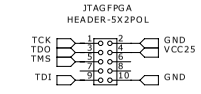

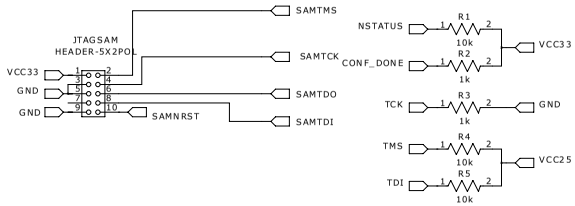

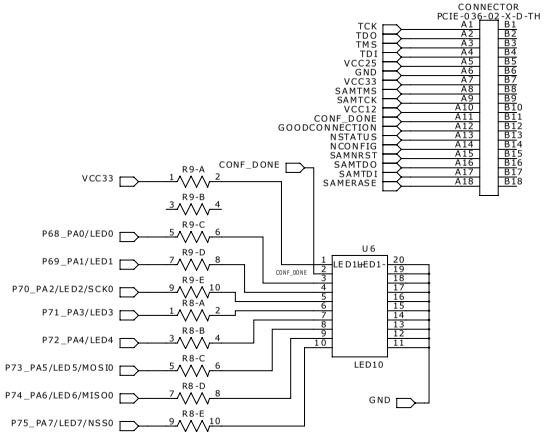

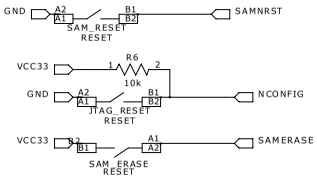

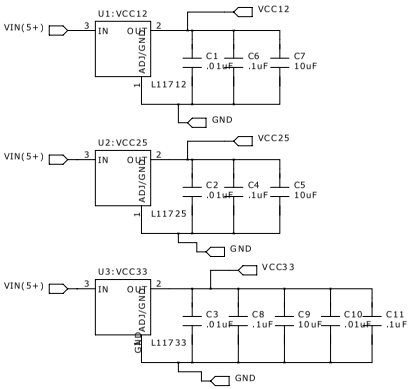

COMPANY:	HMC Engineering		
TITLE:	uMudd Mark V.1		
DRAWN: K. Pezeshki	DATED: November 27th, 2018		
CHECKED: K. Pezeshki	DATED:		
QUALITY CONTROL:	DATED:		
RELEASED:	DATED:		
CODE:	SIZE: C	DRAWING NO:	REV: 5
SCALE:		SHEET: 1 OF 1	