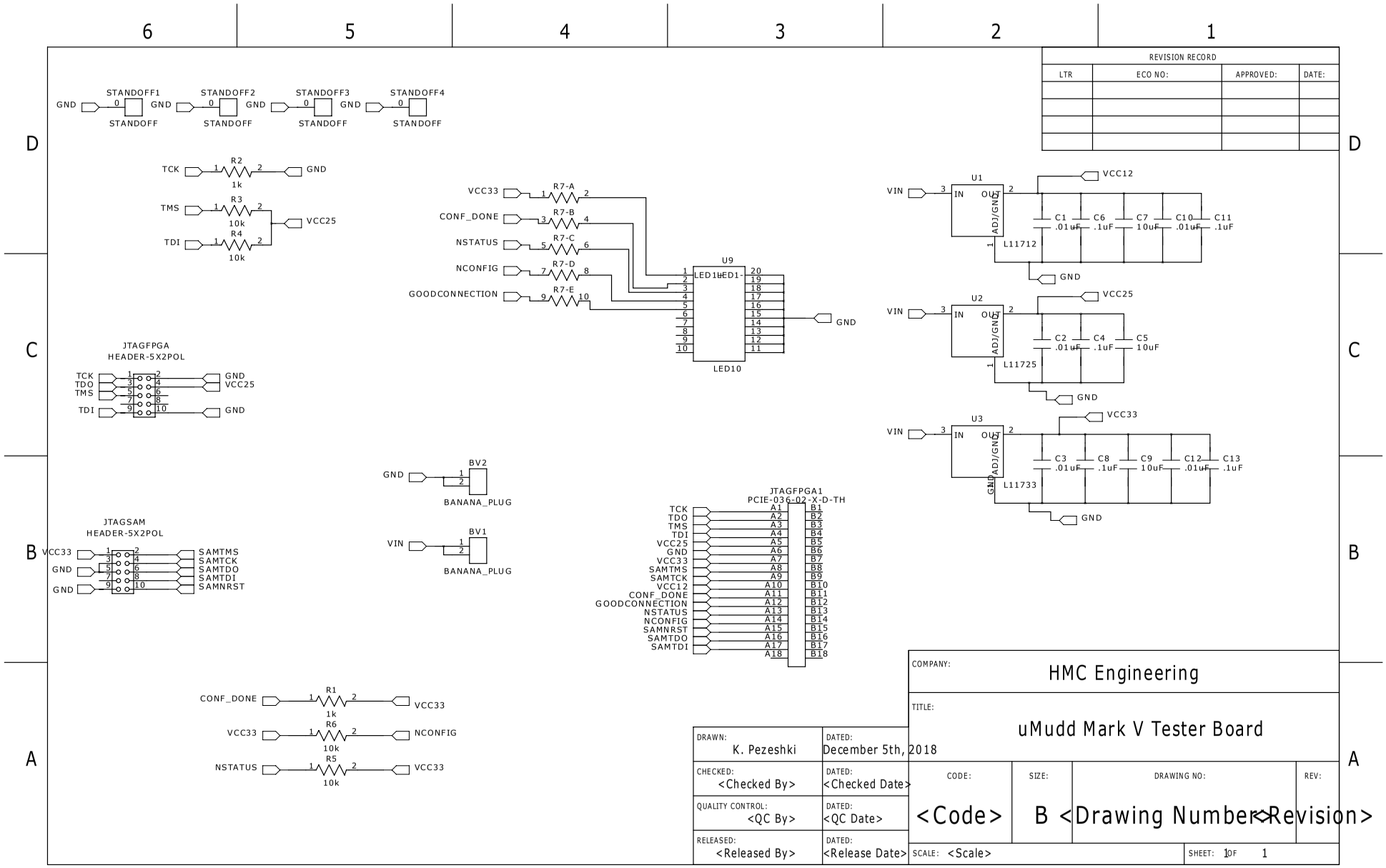
STANDOFF1
STANDOFF2
STANDOFF3
STANDOFF4
STANDOFF
GND
TCK
TMS
TDI
R2
1k
R3
10k
R4
10k
VCC25
VCC33
CONF_DONE
NSTATUS
NCONFIG
GOODCONNECTION
R7-A
R7-B
R7-C
R7-D
R7-E
U9
LED10
U1
U2
U3
VIN
VCC12
L11712
L11725
L11733
C1 .01uF
C6 .1uF
C7 10uF
C10 .01uF
C11 .1uF
C2 .01uF
C4 .1uF
C5 10uF
C3 .01uF
C8 .1uF
C9 10uF
C12 .01uF
C13 .1uF
JTAGFPGA
HEADER-5X2POL
TDO
JTAGSAM
HEADER-5X2POL
SAMTMS
SAMTCK
SAMTDO
SAMTDI
SAMNRST
BV2
BV1
BANANA_PLUG
JTAGFPGA1
PCIE-036-02-X-D-TH
R1
1k
R6
10k
R5
10k
REVISION RECORD
LTR
ECO NO:
APPROVED:
DATE:
COMPANY:
HMC Engineering
TITLE:
uMudd Mark V Tester Board
DRAWN:
K. Pezeshki
DATED:
December 5th, 2018
CHECKED:
<Checked By>
DATED:
<Checked Date>
QUALITY CONTROL:
<QC By>
DATED:
<QC Date>
RELEASED:
<Released By>
DATED:
<Release Date>
CODE:
<Code>
SIZE:
B
DRAWING NO:
<Drawing Number>
REV:
<Revision>
SCALE: <Scale>
SHEET: 1 OF 1