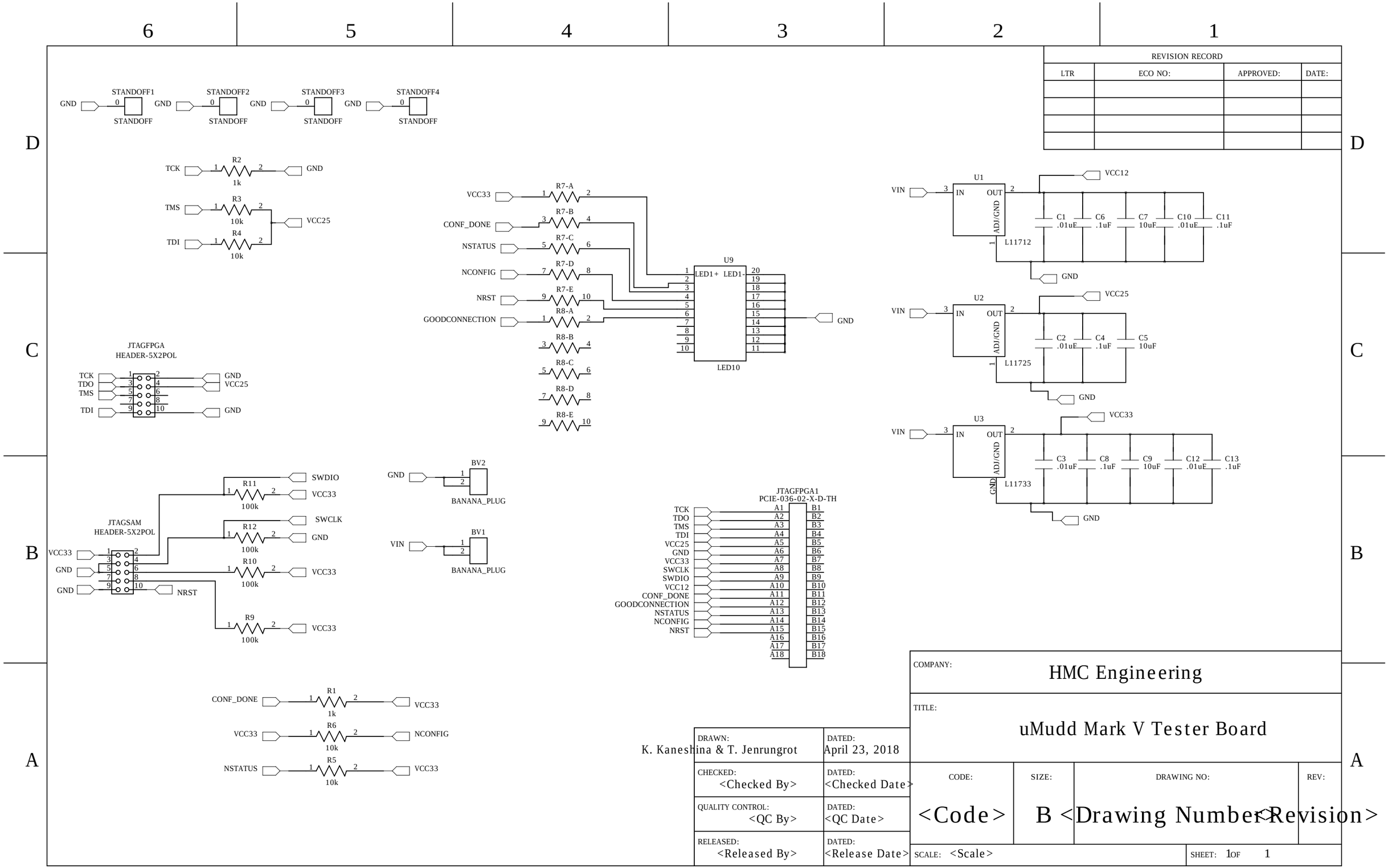
6
5
4
3
2
1
D
C
B
A
STANDOFF1
STANDOFF2
STANDOFF3
STANDOFF4
STANDOFF
GND
R2
1k
R3
10k
R4
10k
TCK
TMS
TDI
VCC25
JTAGFPGA
HEADER-5X2POL
TDO
VCC25
R7-A
R7-B
R7-C
R7-D
R7-E
R8-A
R8-B
R8-C
R8-D
R8-E
VCC33
CONF_DONE
NSTATUS
NCONFIG
NRST
GOODCONNECTION
U9
LED1+
LED1-
LED10
U1
U2
U3
IN
OUT
ADJ/GND
L11712
L11725
L11733
VIN
VCC12
C1 .01uF
C6 .1uF
C7 10uF
C10 .01uF
C11 .1uF
C2 .01uF
C4 .1uF
C5 10uF
C3 .01uF
C8 .1uF
C9 10uF
C12 .01uF
C13 .1uF
JTAGSAM
HEADER-5X2POL
R11
R12
R10
R9
100k
SWDIO
SWCLK
BV2
BV1
BANANA_PLUG
JTAGFPGA1
PCIE-036-02-X-D-TH
R1
R6
R5
10k
NCONFIG
REVISION RECORD
LTR
ECO NO:
APPROVED:
DATE:
COMPANY:
HMC Engineering
TITLE:
uMudd Mark V Tester Board
DRAWN:
K. Kaneshina & T. Jenrungrot
DATED:
April 23, 2018
CHECKED:
<Checked By>
DATED:
<Checked Date>
QUALITY CONTROL:
<QC By>
DATED:
<QC Date>
RELEASED:
<Released By>
DATED:
<Release Date>
CODE:
<Code>
SIZE:
B
DRAWING NO:
<Drawing Number>
REV:
<Revision>
SCALE: <Scale>
SHEET: 1 OF 1