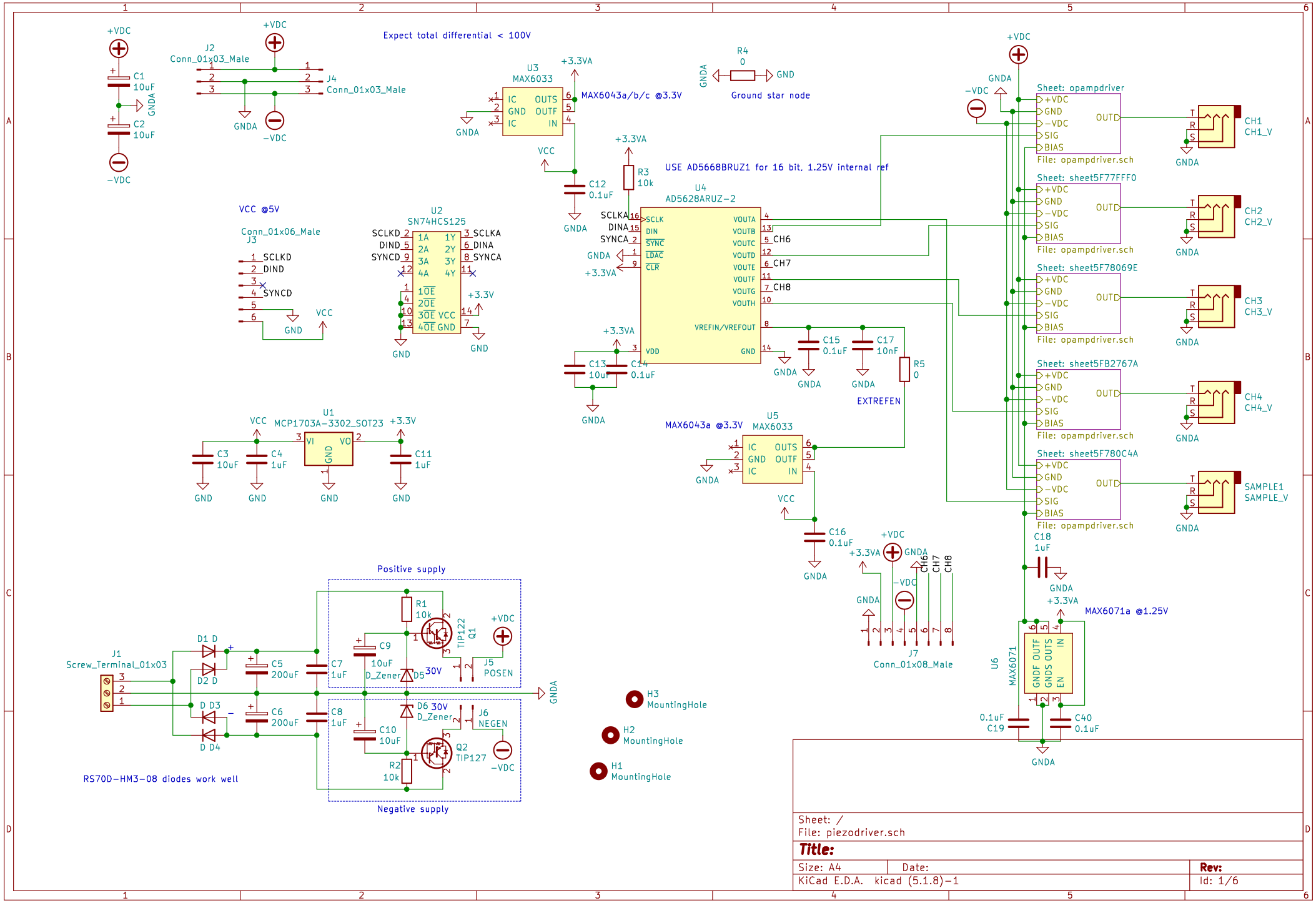
Expect total differential < 100V
+VDC
C1 10uF
C2 10uF
GNDA
−VDC
J2 Conn_01x03_Male
J4 Conn_01x03_Male
U3 MAX6033
IC GND IC OUTS OUTF IN
+3.3VA
MAX6043a/b/c @3.3V
VCC
C12 0.1uF
R4 0
GND
Ground star node
R3 10k
USE AD5668BRUZ1 for 16 bit, 1.25V internal ref
U4 AD5628ARUZ-2
SCLK DIN SYNC LDAC CLR VDD
VOUTA VOUTB VOUTC VOUTD VOUTE VOUTF VOUTG VOUTH
VREFIN/VREFOUT
CH6 CH7 CH8
C13 10uF
C14 0.1uF
C15 0.1uF
C17 10nF
R5 0
EXTREFEN
VCC @5V
Conn_01x06_Male J3
SCLKD DIND SYNCD
U2 SN74HCS125
SCLKA DINA SYNCA
1A 1Y 2A 2Y 3A 3Y 4A 4Y
1OE 2OE 3OE 4OE VCC GND
+3.3V
U1 MCP1703A-3302_SOT23
VI VO GND
C3 10uF
C4 1uF
C11 1uF
MAX6043a @3.3V
U5 MAX6033
C16 0.1uF
Sheet: opampdriver
+VDC GND −VDC SIG BIAS OUTD
File: opampdriver.sch
Sheet: sheet5F77FFF0
Sheet: sheet5F78069E
Sheet: sheet5FB2767A
Sheet: sheet5F780C4A
CH1 CH1_V
CH2 CH2_V
CH3 CH3_V
CH4 CH4_V
SAMPLE1 SAMPLE_V
C18 1uF
MAX6071a @1.25V
U6 MAX6071
GNDF OUTF GNDS OUTS EN IN
0.1uF C19
C40 0.1uF
J7 Conn_01x08_Male
Positive supply
J1 Screw_Terminal_01x03
D1 D D2 D D D3 D D4
C5 200uF
C6 200uF
C7 1uF
C8 1uF
C9 10uF
C10 10uF
D_Zener D5 30V
D6 30V D_Zener
R1 10k
R2 10k
TIP122 Q1
Q2 TIP127
J5 POSEN
J6 NEGEN
Negative supply
RS70D-HM3-08 diodes work well
H3 MountingHole
H2 MountingHole
H1 MountingHole
Sheet: /
File: piezodriver.sch
Title:
Size: A4
Date:
Rev:
KiCad E.D.A. kicad (5.1.8)-1
Id: 1/6

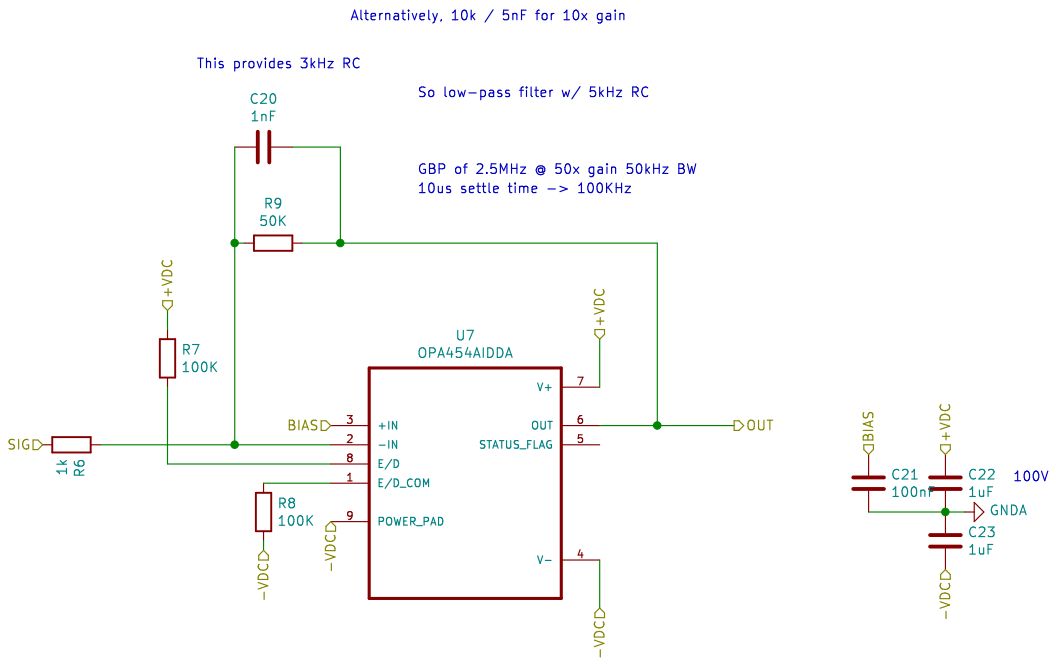

Sheet: /opampdriver/
File: opampdriver.sch

Title:

Size: A4	Date:	Rev:
KiCad E.D.A. kicad (5.1.8)-1		Id: 2/6

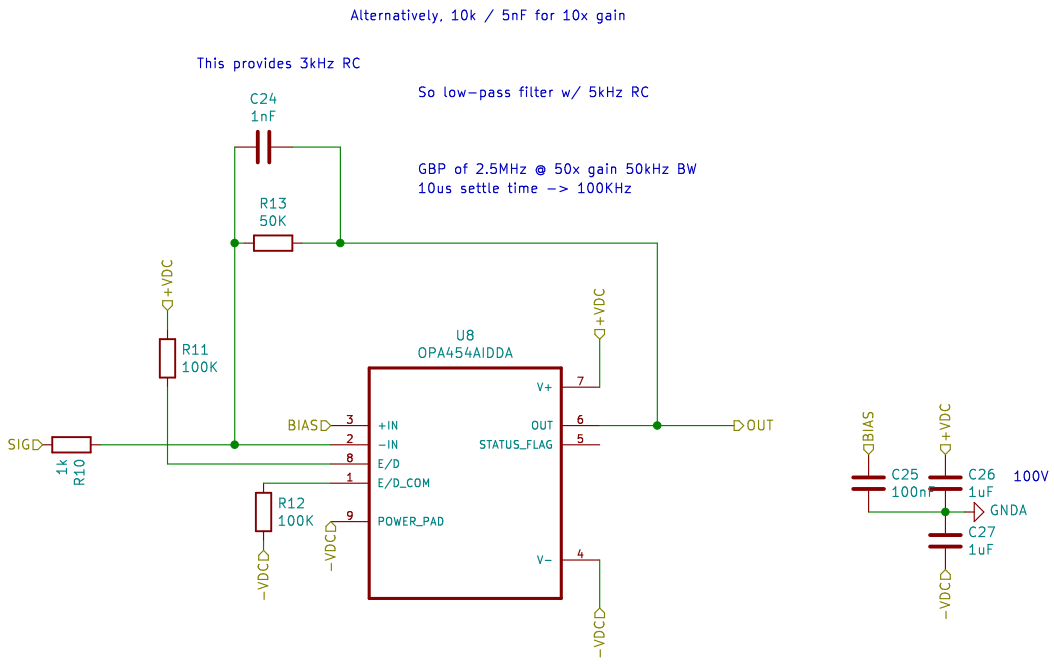

Sheet: /sheet5F77FFF0/
File: opampdriver.sch

Title:

Size: A4	Date:	**Rev:**
KiCad E.D.A. kicad (5.1.8)-1		Id: 3/6

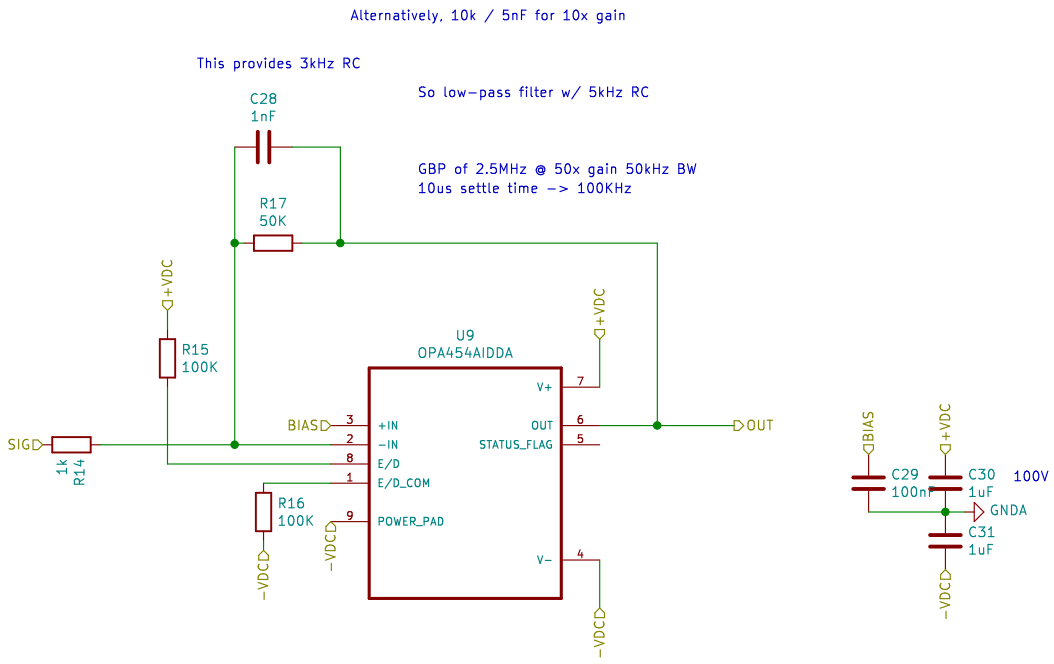

Sheet: /sheet5F78069E/
File: opampdriver.sch

Title:

Size: A4	Date:	Rev:
KiCad E.D.A. kicad (5.1.8)-1		Id: 4/6

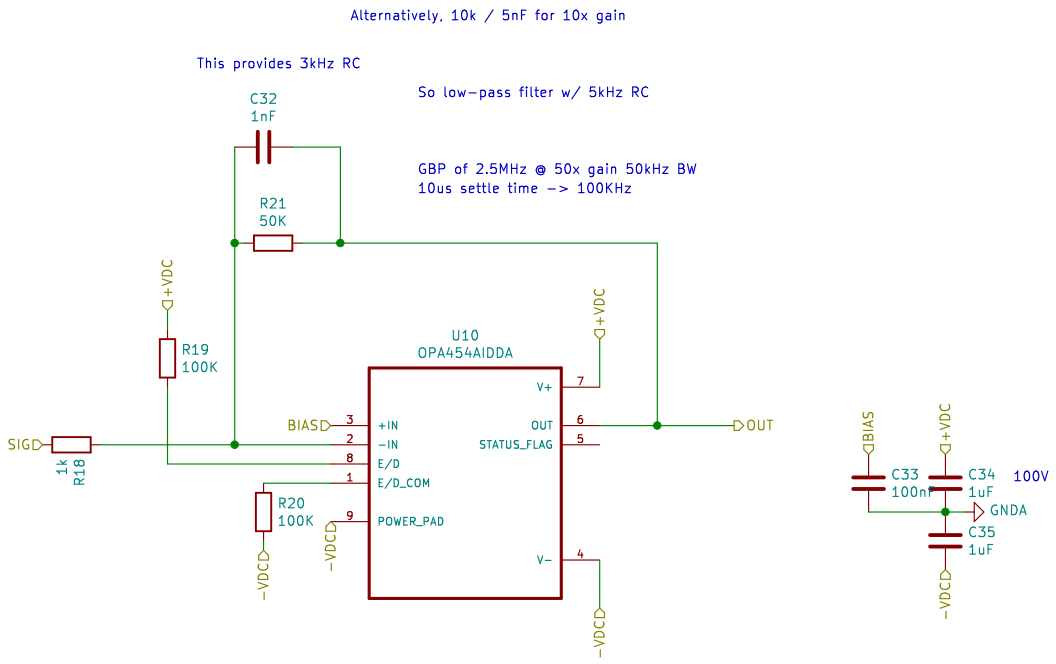

Sheet: /sheet5F780C4A/
File: opampdriver.sch

Title:

Size: A4	Date:	Rev:
KiCad E.D.A. kicad (5.1.8)-1		Id: 5/6

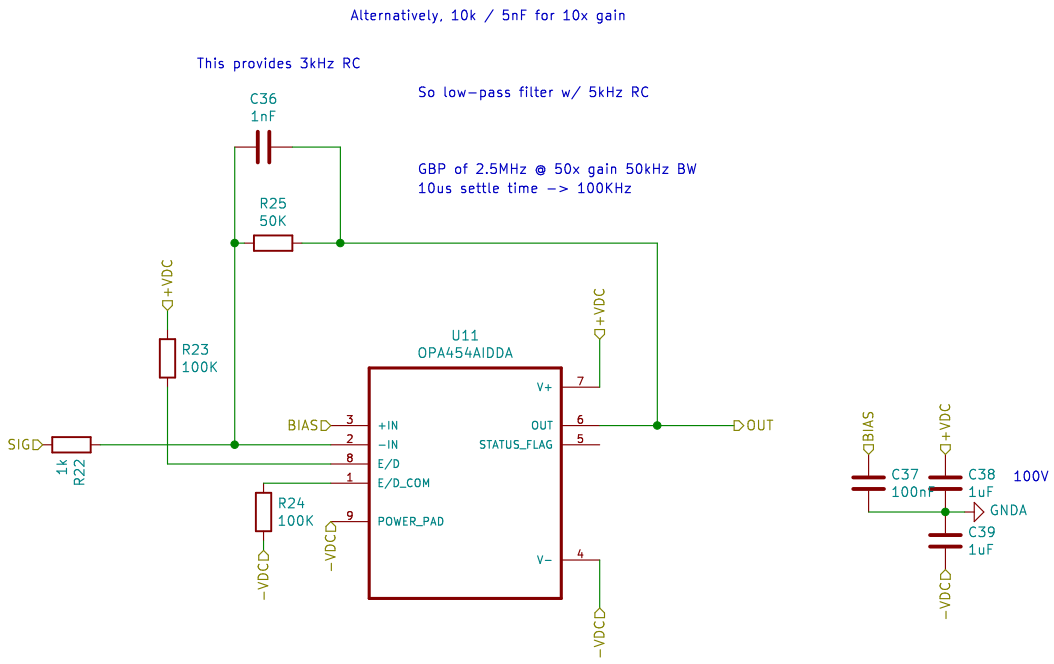

Sheet: /sheet5FB2767A/
File: opampdriver.sch

Title:

Size: A4	Date:	Rev:
KiCad E.D.A. kicad (5.1.8)-1		Id: 6/6