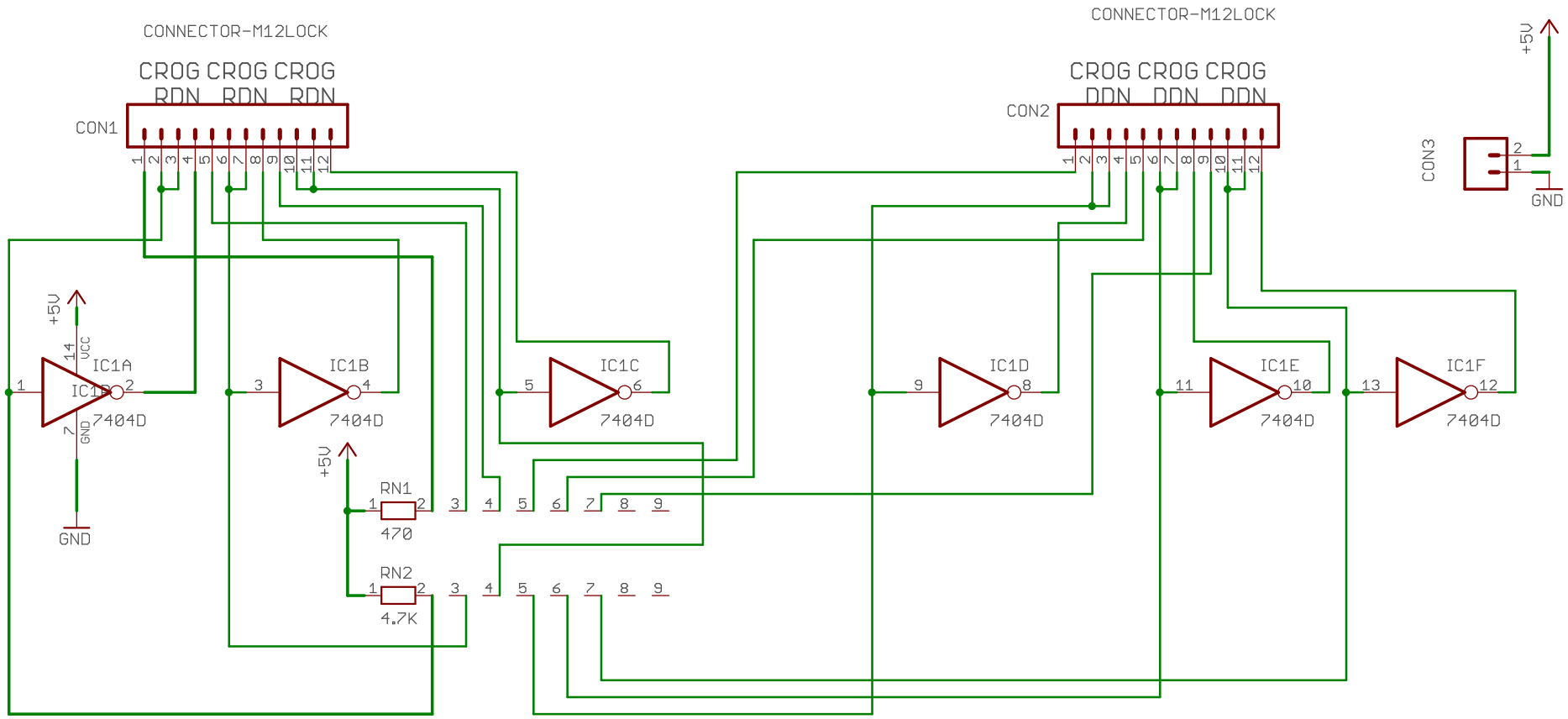

Board Boilerplate

open hardware

A Template for Eagle Projects

File: MRCS-Occupancy-Display	V 1.0
Author: Seth Neumann, Allison Dendy	R A
Date: 9/19/2023 7:59 PM	Sheet: 1/1