THIS DRAWING IS THE PROPERTY OF ANALOG DEVICES INC. IT IS NOT TO BE REPRODUCED OR COPIED, IN WHOLE OR IN PART, OR USED IN FURNISHING INFORMATION TO OTHERS, OR FOR ANY OTHER PURPOSE DETRIMENTAL TO THE INTERESTS OF ANALOG DEVICES.
THE EQUIPMENT SHOWN HEREON MAY BE PROTECTED BY PATENTS OWNED OR CONTROLLED BY ANALOG DEVICES.

RELAY CONTROL CHART

CONTROL	CODE	DEVICE	FUNCTION	CONNECTOR

REVISIONS			
REV	DESCRIPTION	DATE	APPROVED
	ENG - NO PN		

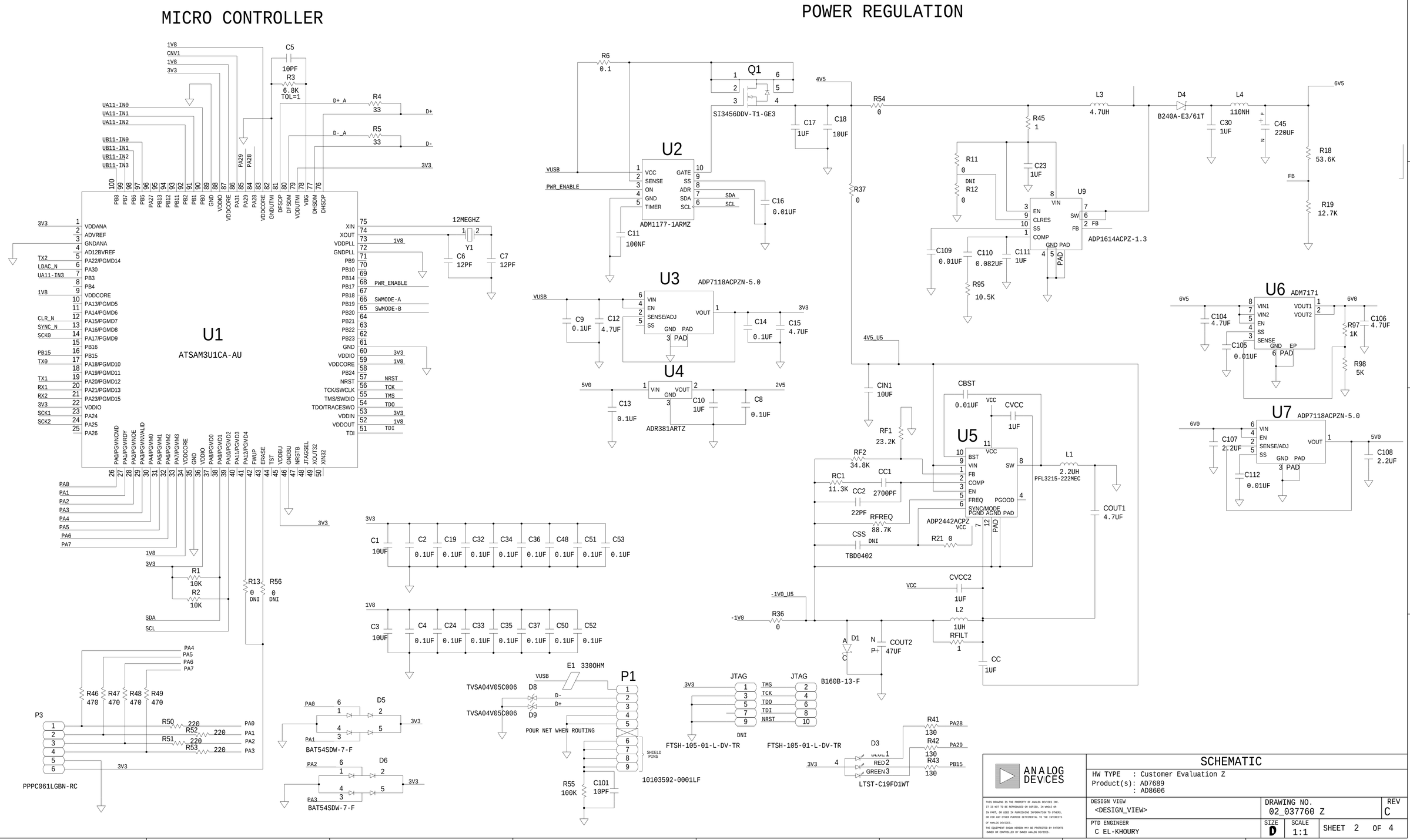

ANALOG FRONT END CHANNEL A

REVISIONS			
REV	DESCRIPTION	DATE	APPROVED

CONVERTERS

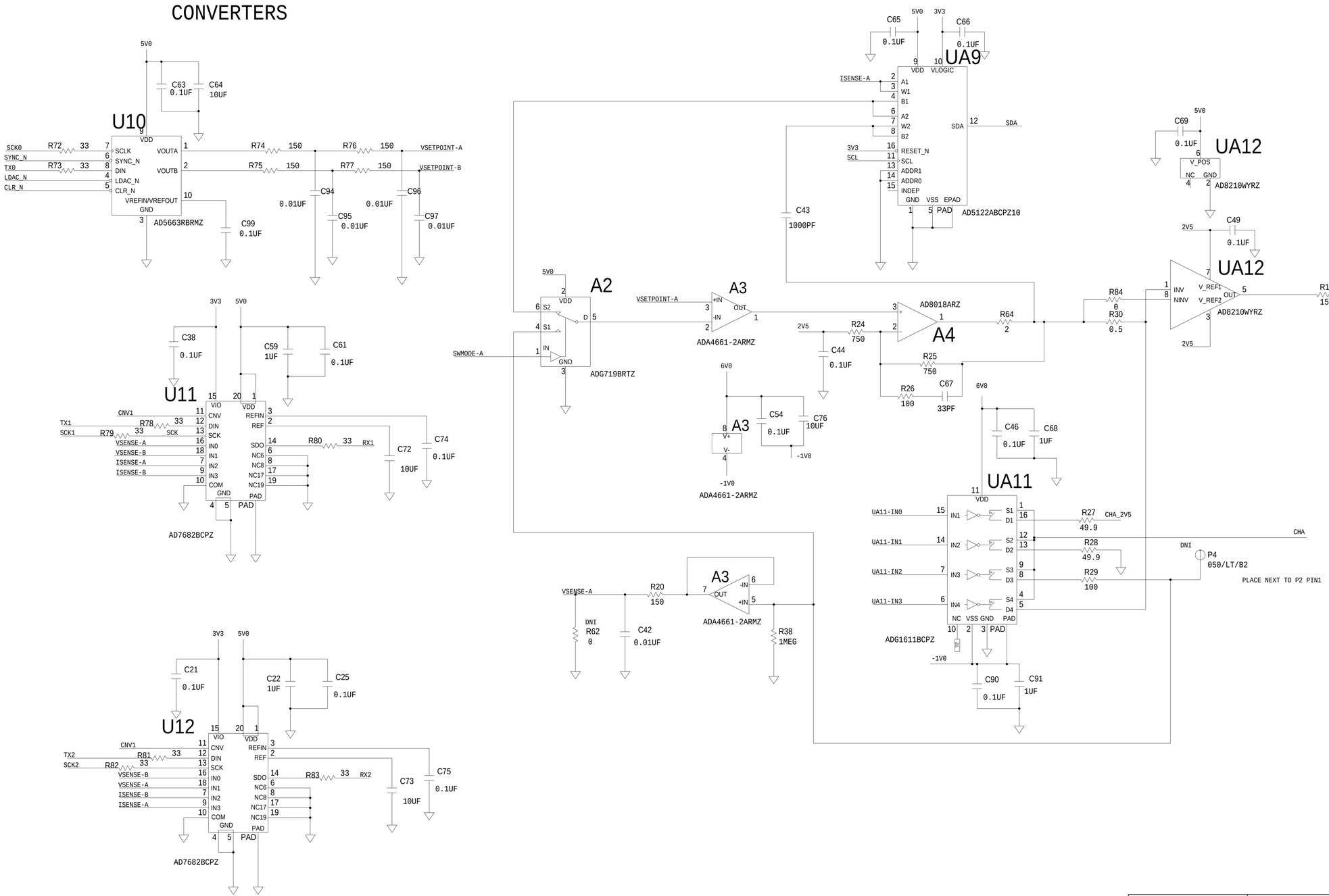

ANALOG DEVICES

SCHEMATIC

HW TYPE : Customer Evaluation Z
Product(s): AD7689
: AD8606

THIS DRAWING IS THE PROPERTY OF ANALOG DEVICES INC.
IT IS NOT TO BE REPRODUCED OR COPIED, IN WHOLE OR IN PART, OR USED IN FURNISHING INFORMATION TO OTHERS, OR FOR ANY OTHER PURPOSE DETRIMENTAL TO THE INTERESTS OF ANALOG DEVICES.
THE EQUIPMENT SHOWN HEREIN MAY BE PROTECTED BY PATENTS OWNED OR CONTROLLED BY OWNED ANALOG DEVICES.

DESIGN VIEW	DRAWING NO.	REV
<DESIGN_VIEW>	02_037760 Z	C

PTD ENGINEER	SIZE	SCALE	SHEET
C EL-KHOURY	D	1:1	3 OF 4

REVISIONS			
REV	DESCRIPTION	DATE	APPROVED

ANALOG FRONT END CHANNEL B

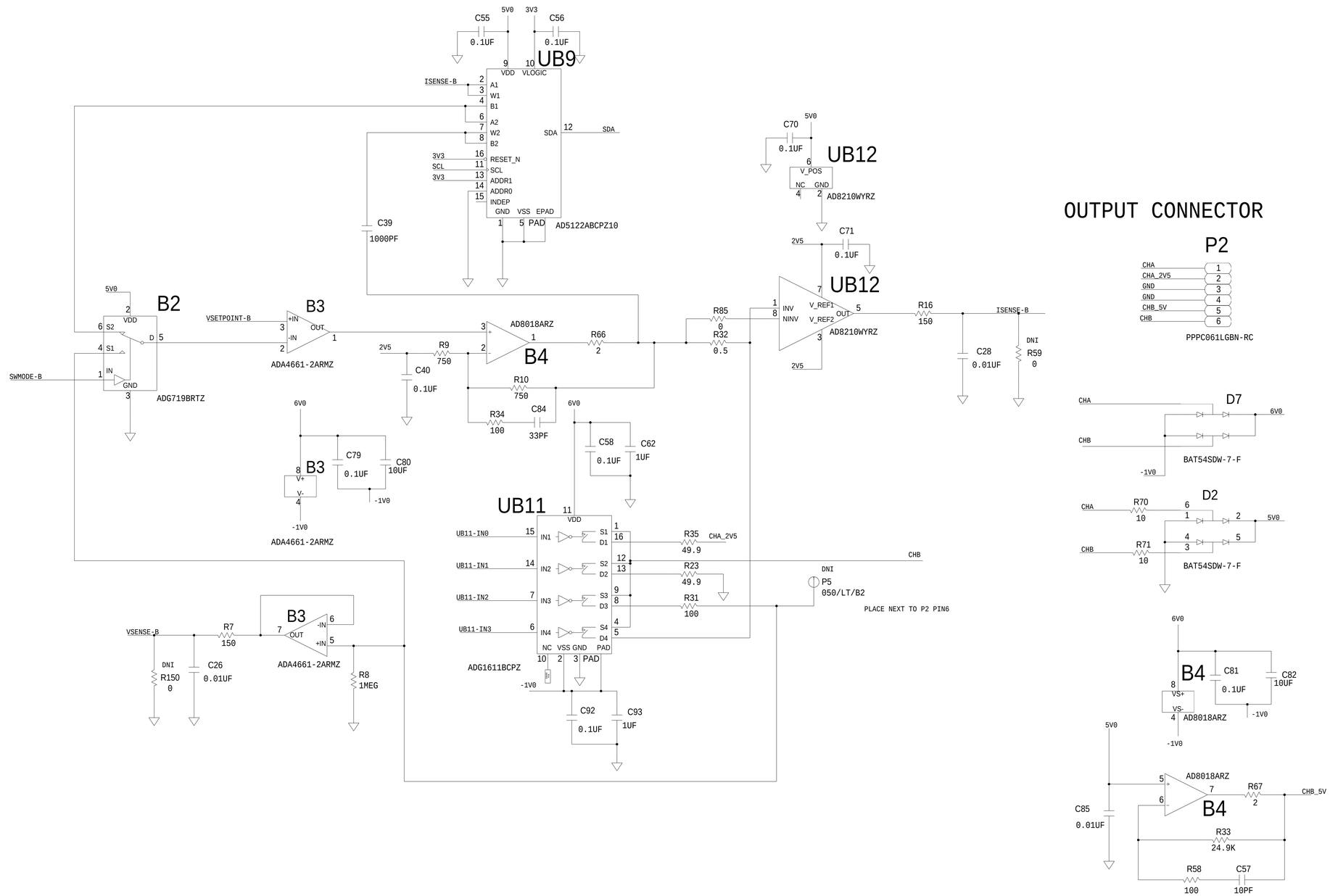

ANALOG DEVICES

THIS DRAWING IS THE PROPERTY OF ANALOG DEVICES INC
IT IS NOT TO BE REPRODUCED OR COPIED, IN WHOLE OR
IN PART, OR USED IN FURNISHING INFORMATION TO OTHERS,
OR FOR ANY OTHER PURPOSE DETRIMENTAL TO THE INTERESTS
OF ANALOG DEVICES.
THE EQUIPMENT SHOWN HEREON MAY BE PROTECTED BY PATENTS
OWNED OR CONTROLLED BY OWNED ANALOG DEVICES.

SCHEMATIC

HW TYPE : Customer Evaluation Z
Product(s): AD7689
: AD8606

DESIGN VIEW	DRAWING NO.	REV
<DESIGN_VIEW>	02_037760 Z	C
PTD ENGINEER: C EL-KHOURY	SIZE D / SCALE 1:1	SHEET 4 OF 4