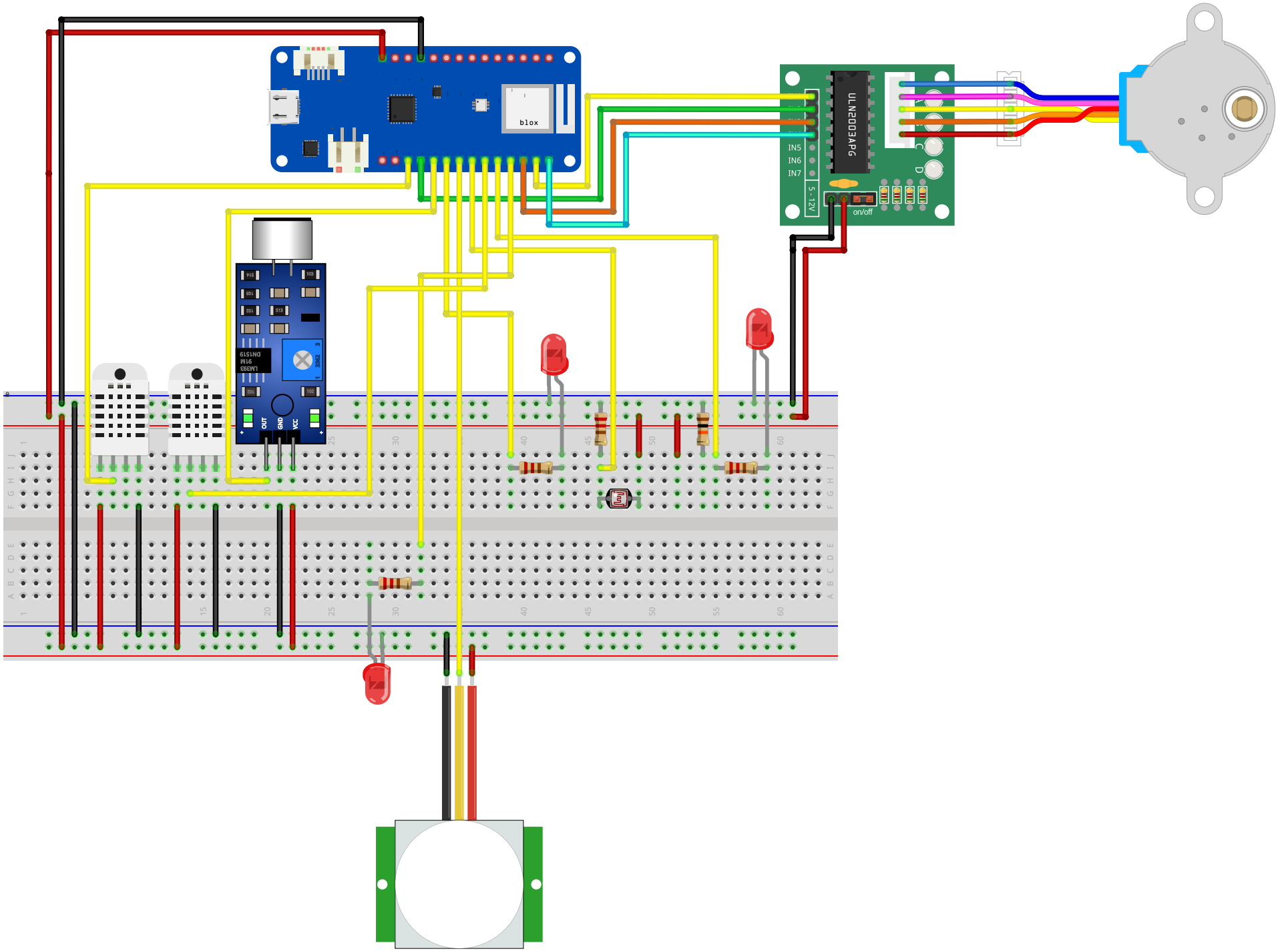
blox
ULN2003APG
IN5
IN6
IN7
5 - 12V
on/off
LM393
9TM
DN1519
OUT
GND
VCC

fritzing