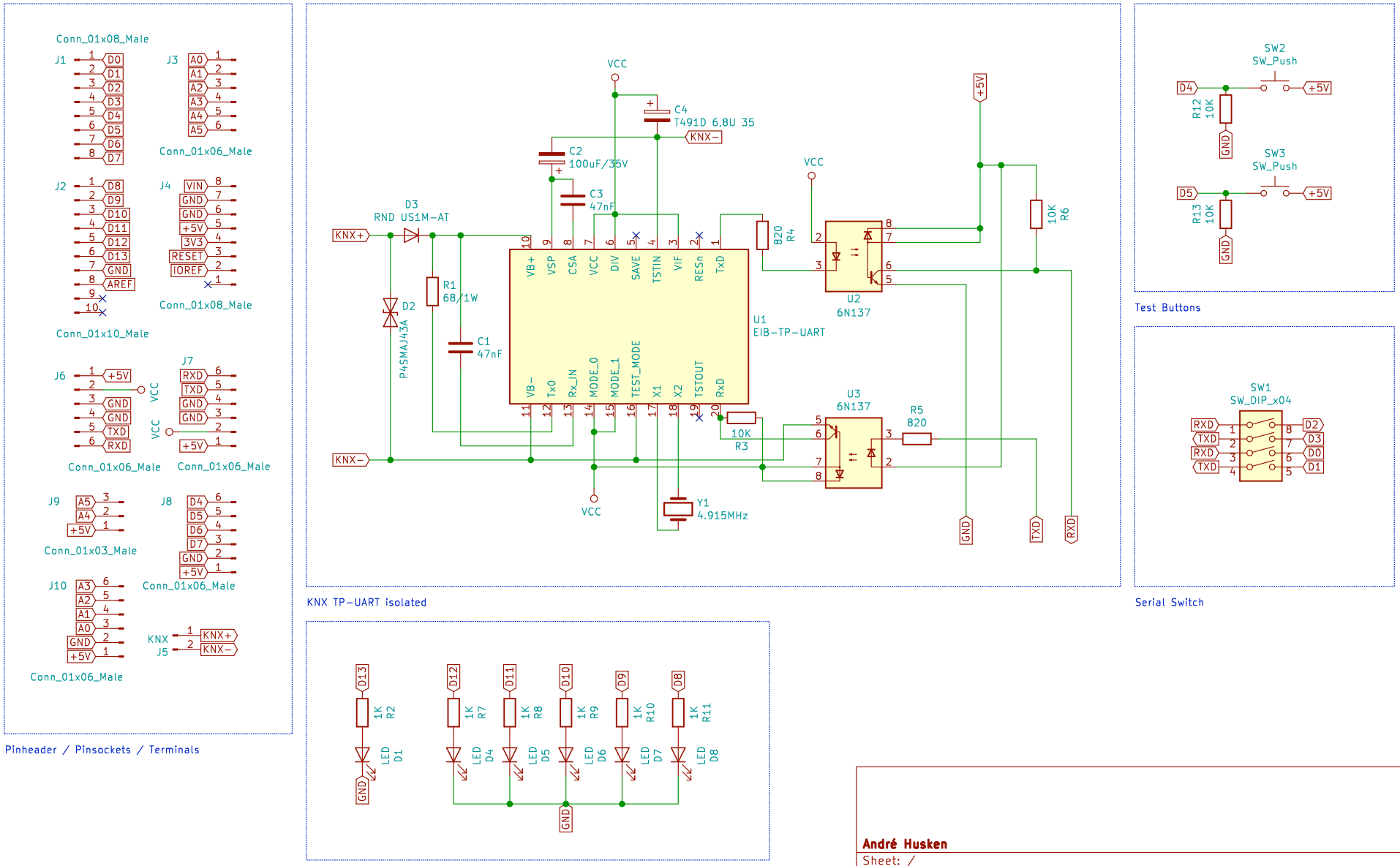

André Husken

Sheet: /

File: Arduino_KNX_Schield.sch

Title: Arduino Uno KNX Shield

Size: A4	Date: 2021	**Rev: 2.1**
KiCad E.D.A. eeschema (5.1.2-1)-1		Id: 1/1