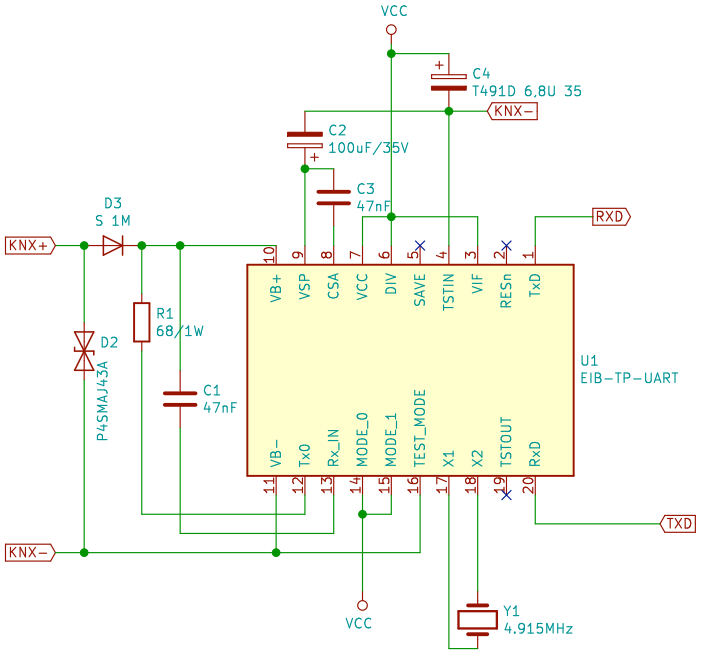

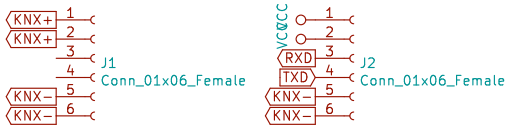

www.arduino−smarthome.de

André Husken

Sheet: /

File: KNX_BCU.sch

Title: KNX TP−UART BCU

Size: A4	Date: 2021	**Rev: V.1.0**
KiCad E.D.A. kicad (5.1.2−1)−1		Id: 1/1