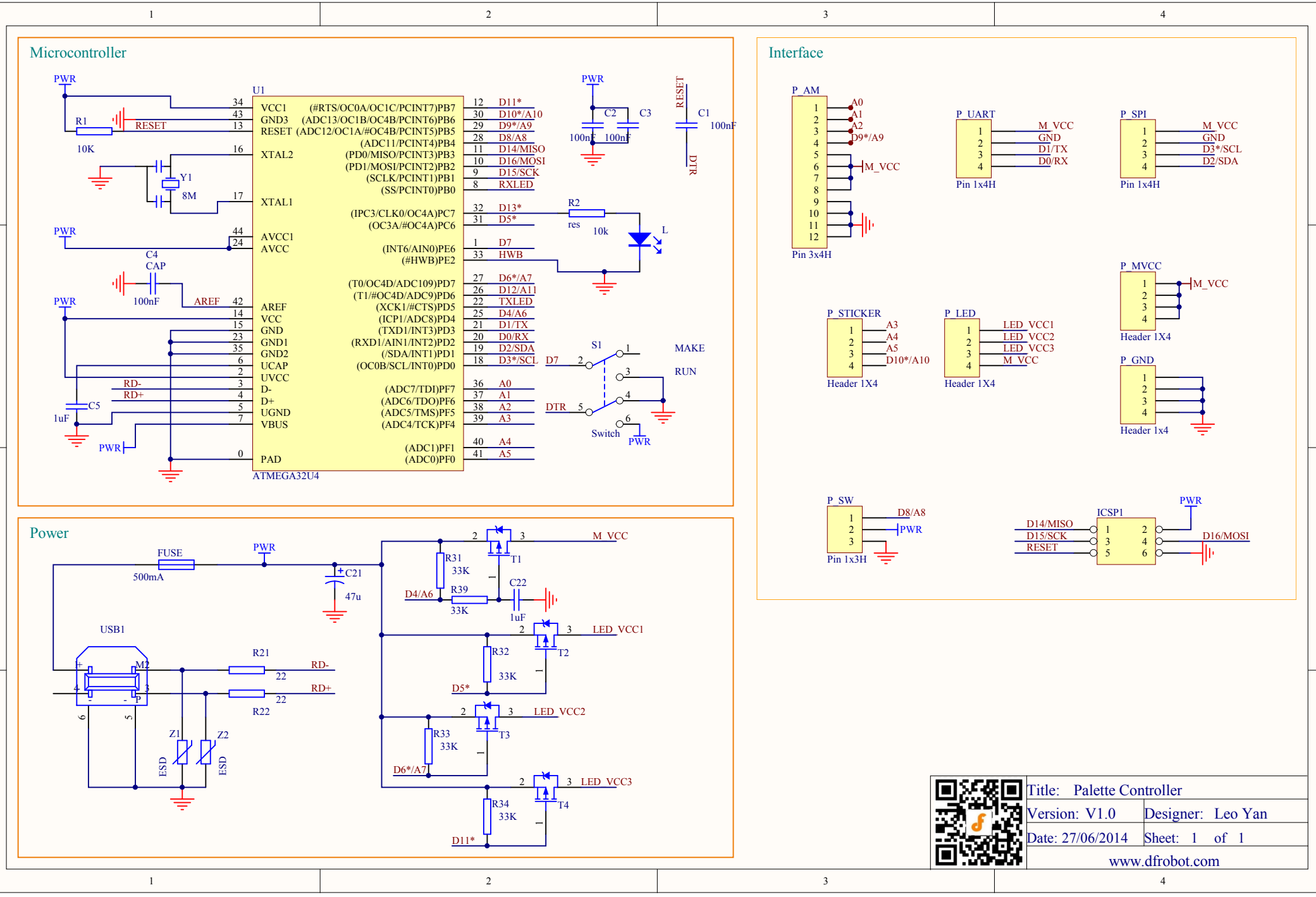
Microcontroller
U1
ATMEGA32U4
VCC1 (#RTS/OC0A/OC1C/PCINT7)PB7
GND3 (ADC13/OC1B/OC4B/PCINT6)PB6
RESET (ADC12/OC1A/#OC4B/PCINT5)PB5
(ADC11/PCINT4)PB4
XTAL2 (PD0/MISO/PCINT3)PB3
(PD1/MOSI/PCINT2)PB2
(SCLK/PCINT1)PB1
(SS/PCINT0)PB0
XTAL1
(IPC3/CLK0/OC4A)PC7
(OC3A/#OC4A)PC6
AVCC1
AVCC
(INT6/AIN0)PE6
(#HWB)PE2
(T0/OC4D/ADC109)PD7
(T1/#OC4D/ADC9)PD6
AREF (XCK1/#CTS)PD5
VCC (ICP1/ADC8)PD4
GND (TXD1/INT3)PD3
GND1 (RXD1/AIN1/INT2)PD2
GND2 (/SDA/INT1)PD1
UCAP (OC0B/SCL/INT0)PD0
UVCC
D- (ADC7/TDI)PF7
D+ (ADC6/TDO)PF6
UGND (ADC5/TMS)PF5
VBUS (ADC4/TCK)PF4
(ADC1)PF1
PAD (ADC0)PF0
D11* D10*/A10 D9*/A9 D8/A8 D14/MISO D16/MOSI D15/SCK RXLED
D13* D5*
D7 HWB
D6*/A7 D12/A11 TXLED D4/A6 D1/TX D0/RX D2/SDA D3*/SCL
A0 A1 A2 A3 A4 A5
PWR
R1 10K
RESET
Y1 8M
C4 CAP 100nF
AREF
C5 1uF
RD- RD+
C2 100nF
C3 100nF
C1 100nF
R2 res 10k
L
S1
MAKE
RUN
Switch
D7
DTR
Interface
P_AM
Pin 3x4H
A0 A1 A2 D9*/A9 M_VCC
P_UART
Pin 1x4H
M_VCC GND D1/TX D0/RX
P_SPI
Pin 1x4H
M_VCC GND D3*/SCL D2/SDA
P_MVCC
Header 1X4
M_VCC
P_STICKER
Header 1X4
A3 A4 A5 D10*/A10
P_LED
Header 1X4
LED_VCC1 LED_VCC2 LED_VCC3 M_VCC
P_GND
Header 1x4
P_SW
Pin 1x3H
D8/A8 PWR
ICSP1
D14/MISO D15/SCK RESET D16/MOSI
Power
FUSE 500mA
C21 47u
USB1
R21 22 RD-
R22 22 RD+
Z1 Z2 ESD
T1 T2 T3 T4
M_VCC LED_VCC1 LED_VCC2 LED_VCC3
R31 33K D4/A6
R39 33K
C22 1uF
R32 33K D5*
R33 33K D6*/A7
R34 33K D11*
Title: Palette Controller
Version: V1.0
Designer: Leo Yan
Date: 27/06/2014
Sheet: 1 of 1
www.dfrobot.com