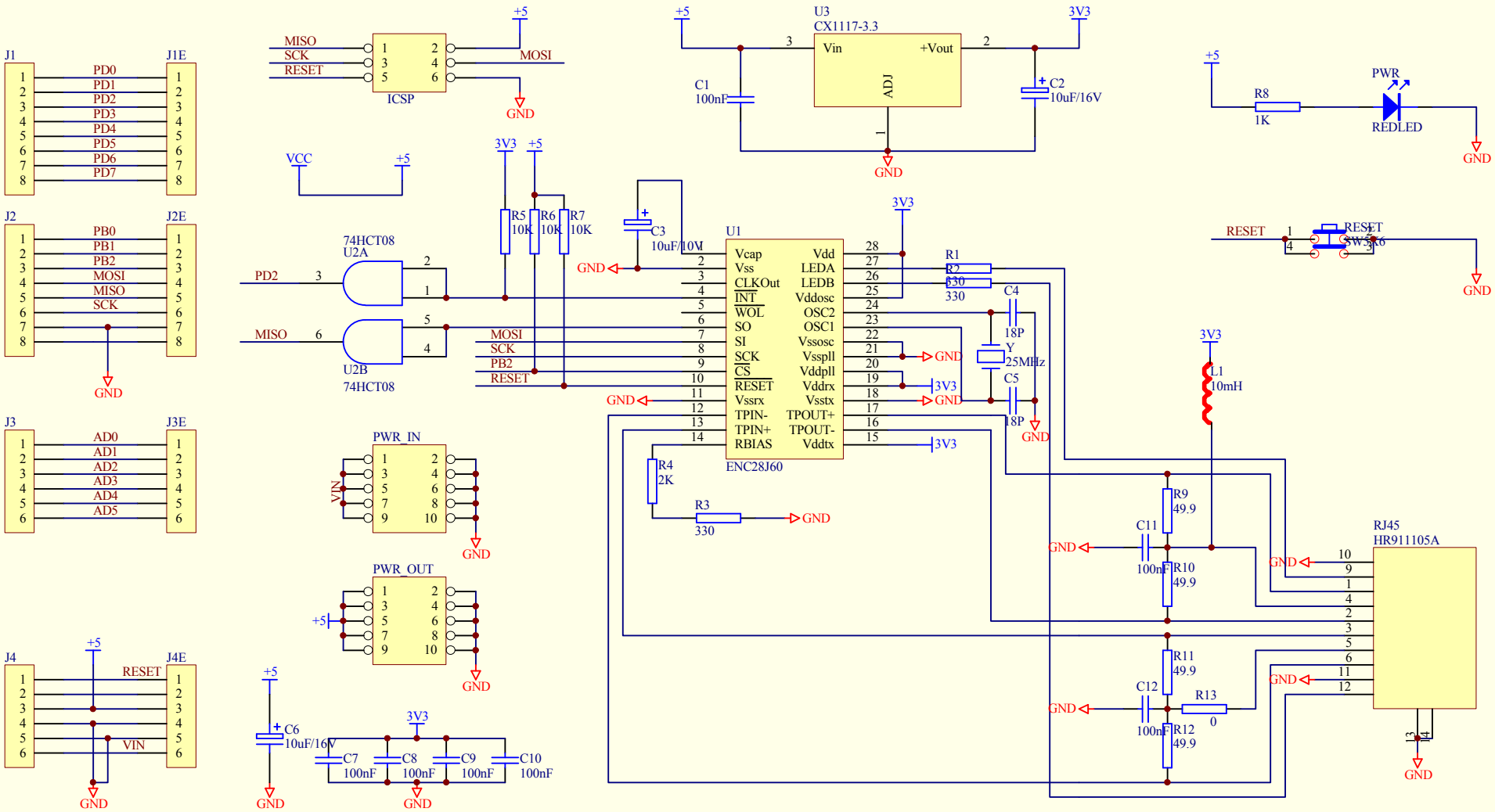

Title		
Size A4	Number	Revision
Date: 27-Feb-2009		Sheet of
File: D:\plan\产品记录\arduino\arduino_NGDM0016.DDB		Drawn By: