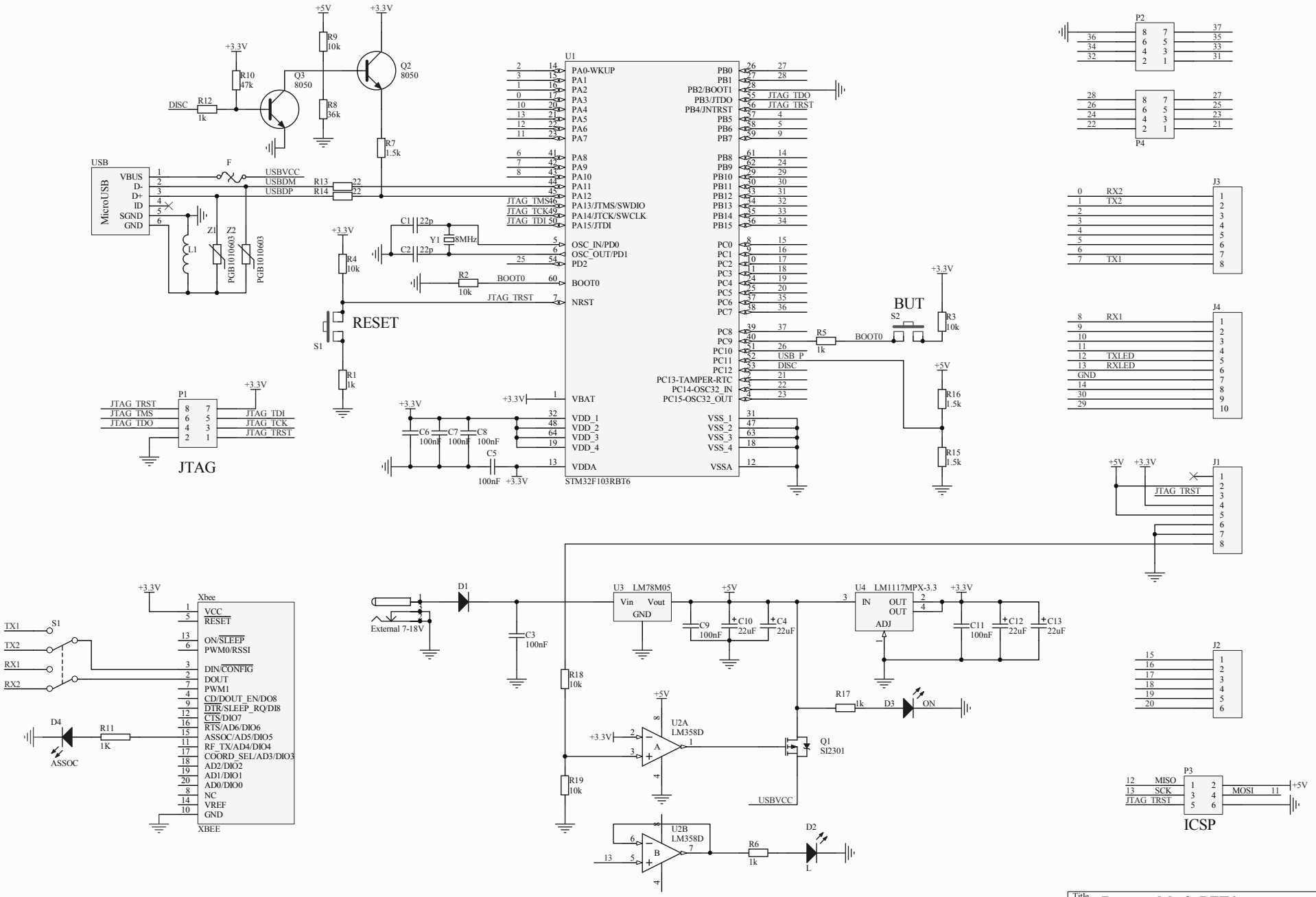
USB
MicroUSB
VBUS
D-
D+
ID
SGND
GND
F
USBVCC
USBDM
USBDP
R13
R14
L1
Z1
Z2
PGB1010603
PGB1010603
+5V
+3.3V
R9
10k
R8
36k
R7
1.5k
Q2
8050
Q3
8050
R10
47k
DISC
R12
1k
U1
STM32F103RBT6
PA0-WKUP
PA1
PA2
PA3
PA4
PA5
PA6
PA7
PA8
PA9
PA10
PA11
PA12
PA13/JTMS/SWDIO
PA14/JTCK/SWCLK
PA15/JTDI
JTAG_TMS
JTAG_TCK
JTAG_TDI
OSC_IN/PD0
OSC_OUT/PD1
PD2
BOOT0
NRST
VBAT
VDD_1
VDD_2
VDD_3
VDD_4
VDDA
VSS_1
VSS_2
VSS_3
VSS_4
VSSA
PB0
PB1
PB2/BOOT1
PB3/JTDO
PB4/JNTRST
PB5
PB6
PB7
PB8
PB9
PB10
PB11
PB12
PB13
PB14
PB15
PC0
PC1
PC2
PC3
PC4
PC5
PC6
PC7
PC8
PC9
PC10
PC11
PC12
PC13-TAMPER-RTC
PC14-OSC32_IN
PC15-OSC32_OUT
JTAG_TDO
JTAG_TRST
USB_P
DISC
C1
22p
C2
22p
Y1
8MHz
R2
10k
R4
10k
RESET
S1
R1
1k
C6
100nF
C7
100nF
C8
100nF
C5
100nF
BUT
S2
R3
10k
R5
1k
R16
1.5k
R15
1.5k
P1
JTAG
JTAG_TRST
JTAG_TMS
JTAG_TDO
JTAG_TDI
JTAG_TCK
JTAG_TRST
P2
P4
J3
RX2
TX2
TX1
J4
RX1
TXLED
RXLED
GND
J1
JTAG_TRST
External 7-18V
D1
C3
100nF
U3 LM78M05
Vin
Vout
GND
C9
100nF
C10
22uF
C4
22uF
U4 LM1117MPX-3.3
IN
OUT
OUT
ADJ
C11
100nF
C12
22uF
C13
22uF
R17
1k
D3
ON
Q1
SI2301
USBVCC
R18
10k
R19
10k
U2A
LM358D
U2B
LM358D
R6
1k
D2
L
J2
Xbee
XBEE
VCC
RESET
ON/SLEEP
PWM0/RSSI
DIN/CONFIG
DOUT
PWM1
CD/DOUT_EN/DO8
DTR/SLEEP_RQ/DI8
CTS/DIO7
RTS/AD6/DIO6
ASSOC/AD5/DIO5
RF_TX/AD4/DIO4
COORD_SEL/AD3/DIO3
AD2/DIO2
AD1/DIO1
AD0/DIO0
NC
VREF
GND
TX1
TX2
RX1
RX2
S1
D4
ASSOC
R11
1K
P3
ICSP
MISO
SCK
JTAG_TRST
MOSI
Title
Dreamer Maple RET6
Size
A3
Number
Revision
1.0
Date:
2014-5-21
Sheet of
File:
D:\产品记录\..\Dreamer Maple RET6.Schdoc
Drawn By: