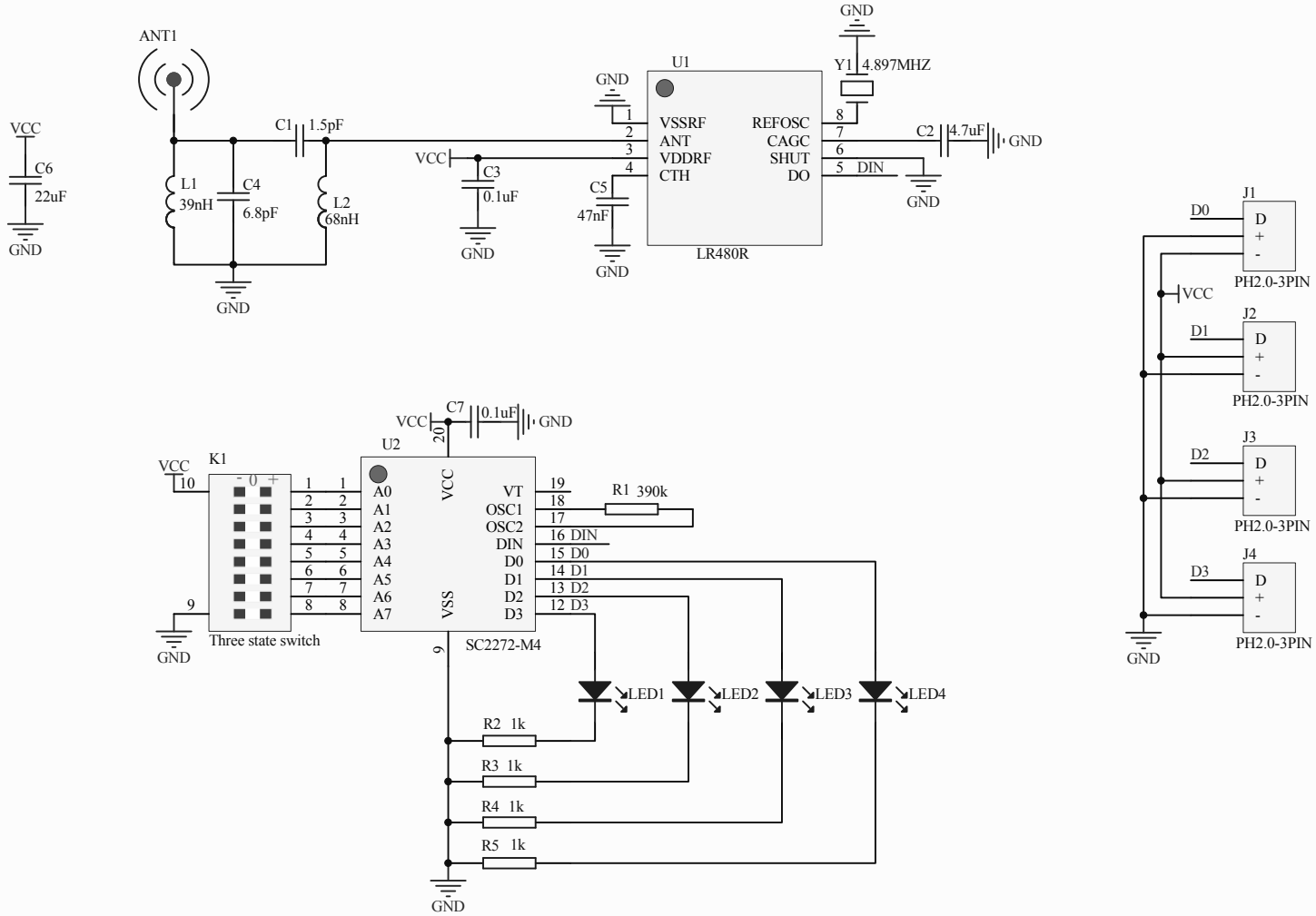

Title: *Gravity 315MHZ RF Receiver Module*			SKU: *TEL0112*
Drawn: *DongZi-CD*	Revision: *1.0*		Size: *A4*
Page: *1 of 1*	Date: *2017-07-05*		Time: *16:39:26*