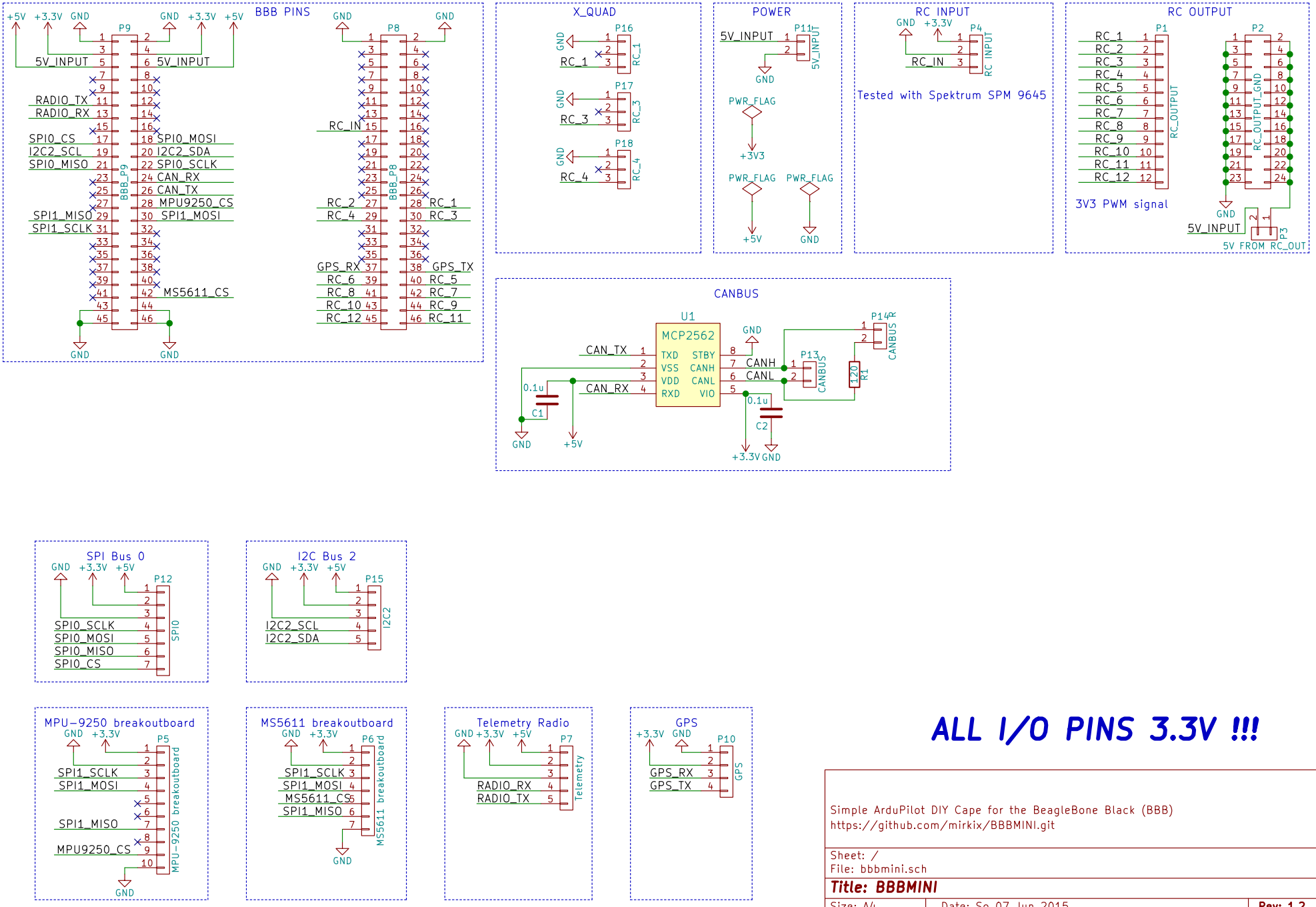

ALL I/O PINS 3.3V !!!

Simple ArduPilot DIY Cape for the BeagleBone Black (BBB)
https://github.com/mirkix/BBBMINI.git

Sheet: /
File: bbbmini.sch

Title: BBBMINI

Size: A4	Date: So 07 Jun 2015	Rev: 1.2
KiCad E.D.A. kicad 0.201505262310+568423ubuntu14.04.1-product		Id: 1/1