Service Manual

EMX1

CONTENTS

Circuit Diagram: Page 2-10
Block Diagram: Page 11
Structural Diagram: Page 12
Test Mode: Page 13-19
Calibration: Page 20-21
Parts List: Page:22-24

4th Edition
Issued date: July 15, 2004
Issued by: KORG INC.

A/D Buffer

CPU

ROM ICE

Panel PCB

JTAG H-UDI

Smart Media Slot

NAND Flash

SDRAM

Boot Flash

MARK	REVISION REASON	DATE	REVISED BY
△			
△			
△			
△			
△			

DRAWN BY	DESIGNED BY	CHECKED BY	MODEL	X-1200/1210 (EMX-1/ESX-1)
M.Kuwabara	M.Kuwabara		TITLE	CPU & Peripherals
KORG	DRAWING NO.	KOD-A30534	DATE	'03.06.20

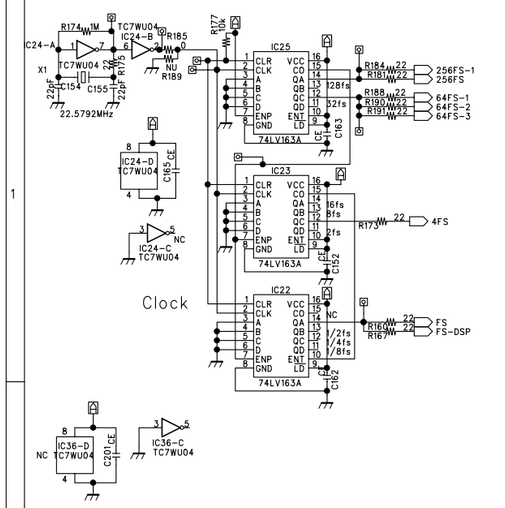

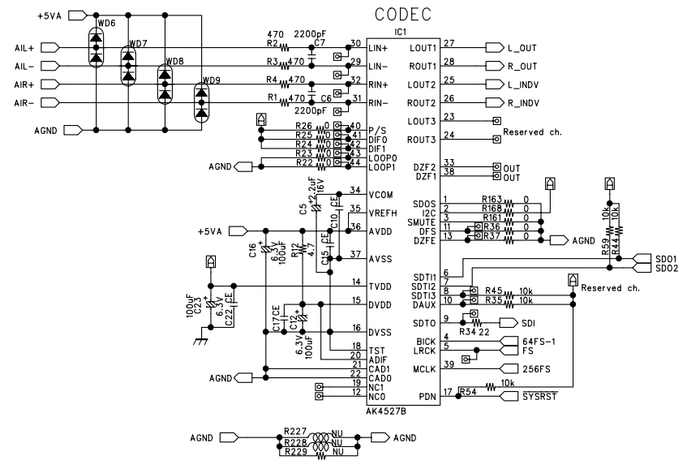

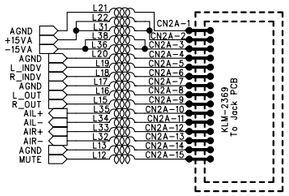

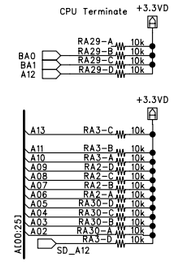

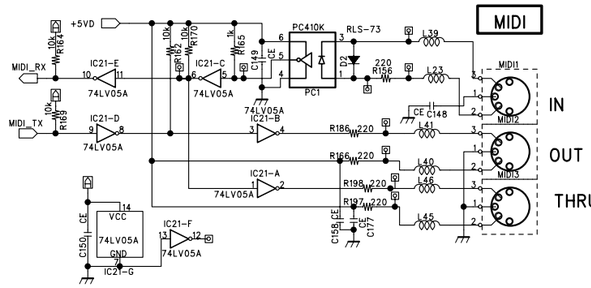

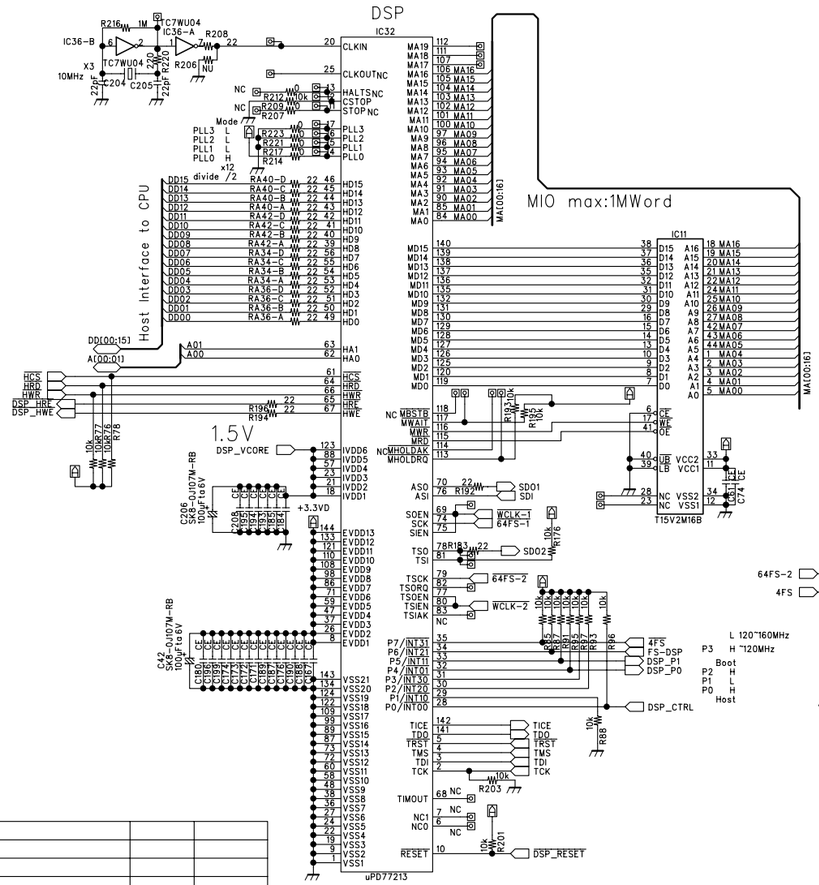

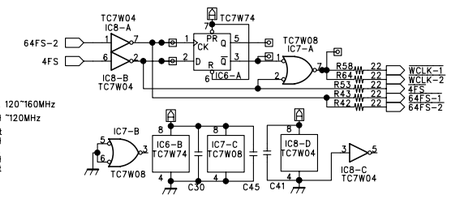

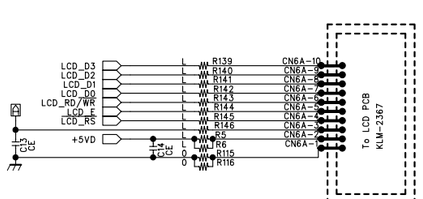

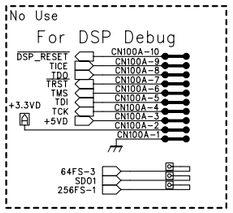

MARK	REVISION REASON	DATE	REVISED BY
△			
△			
△			
△			
△			

DRAWN BY	DESIGNED BY	CHECKED BY	MODEL X-1200/1210 (EMX-1/ESX-1)
M.Kuwabara	M.Kuwabara		TITLE DSP,CODEC MIDI

KORG | DRAWING NO. KOD-A30535 | DATE '03.06.20

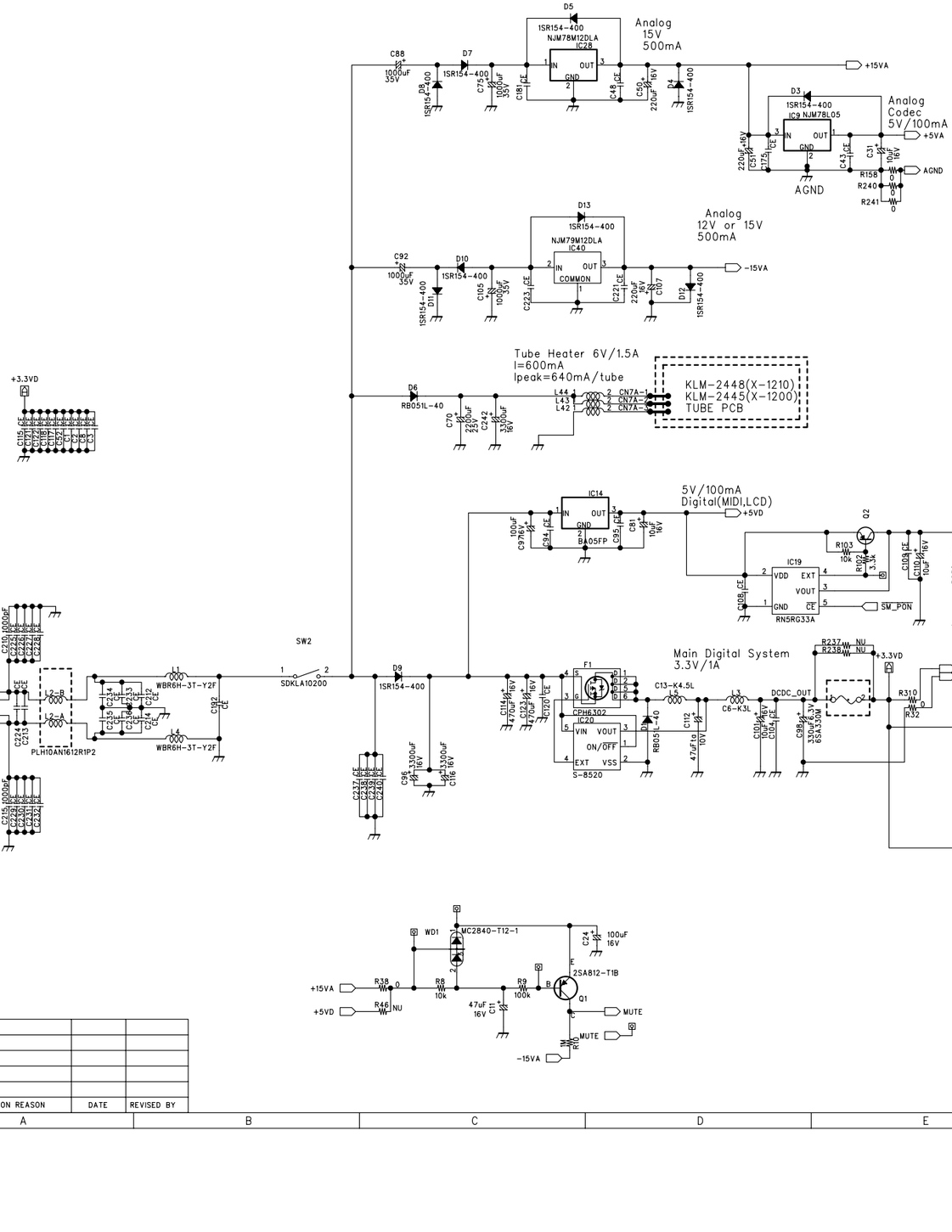

MARK	REVISION REASON	DATE	REVISED BY
△			
△			
△			
△			
△			

DRAWN BY	DESIGNED BY	CHECKED BY	MODEL X-1200/1210 (EMX-1/ESX-1)
M.Kuwabara	M.Kuwabara		TITLE: Power

KORG | DRAWING NO. KOD-A30536 | DATE '03.06.20

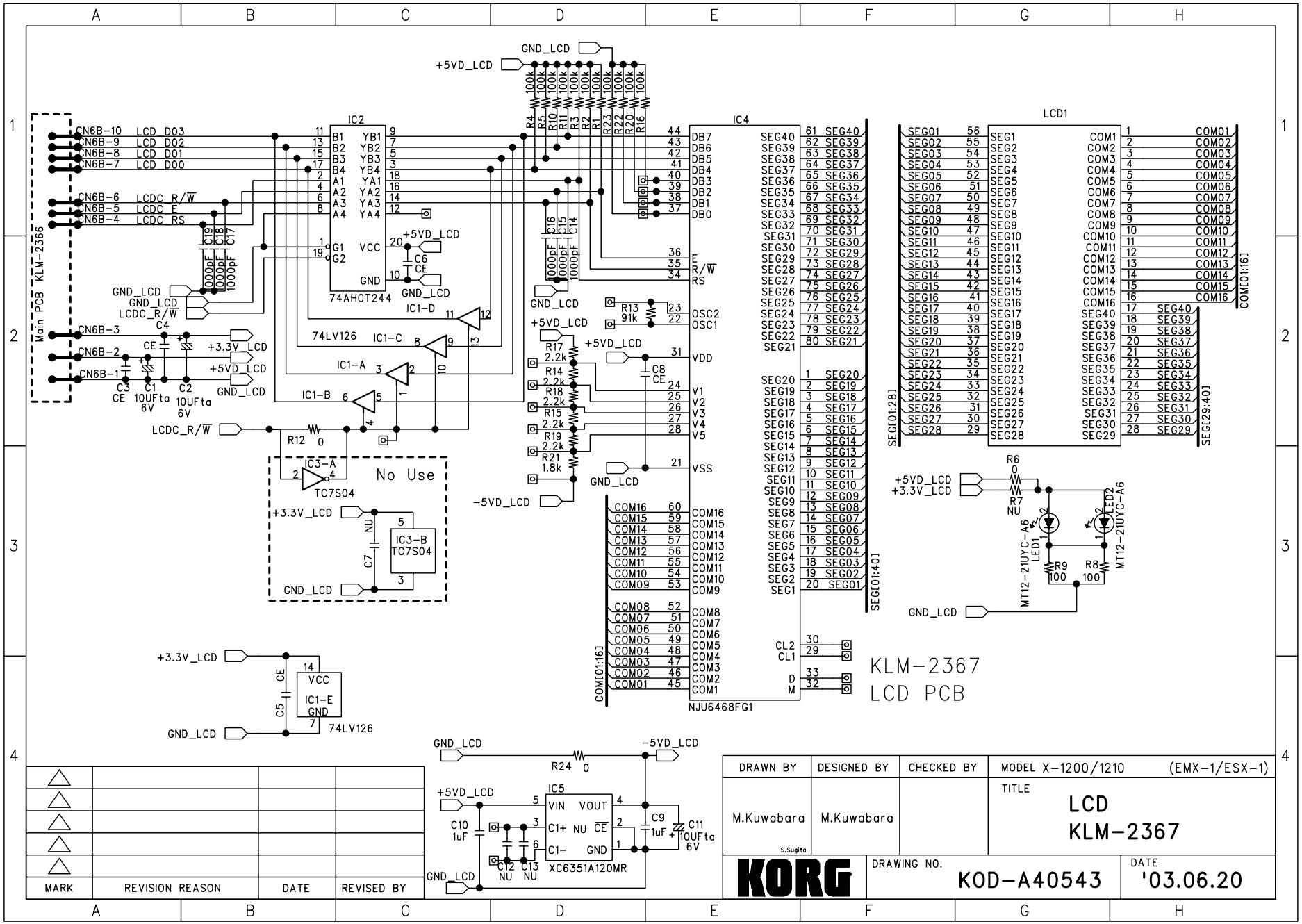
Main PCB KLM-2366
CN6B-10 LCD_DO3
CN6B-9 LCD_DO2
CN6B-8 LCD_DO1
CN6B-7 LCD_DO0
CN6B-6 LCDC_R/W
CN6B-5 LCDC_E
CN6B-4 LCDC_RS
CN6B-3
CN6B-2
CN6B-1
IC2
74AHCT244
IC1-A
IC1-B
IC1-C
IC1-D
74LV126
IC3-A
IC3-B
TC7S04
No Use
IC1-E
74LV126
IC4
NJU6468FG1
LCD1
KLM-2367
LCD PCB
IC5
XC6351A120MR
+5VD_LCD
+3.3V_LCD
GND_LCD
-5VD_LCD
LCDC_R/W
MARK
REVISION REASON
DATE
REVISED BY
DRAWN BY
M.Kuwabara
DESIGNED BY
M.Kuwabara
S.Sugita
CHECKED BY
MODEL X-1200/1210 (EMX-1/ESX-1)
TITLE
LCD
KLM-2367
KORG
DRAWING NO.
KOD-A40543
DATE
'03.06.20

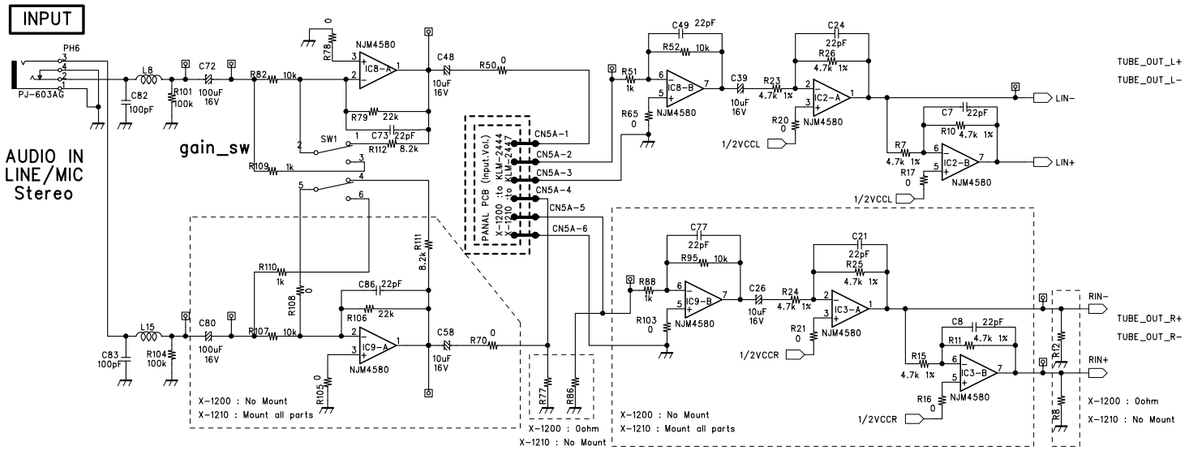

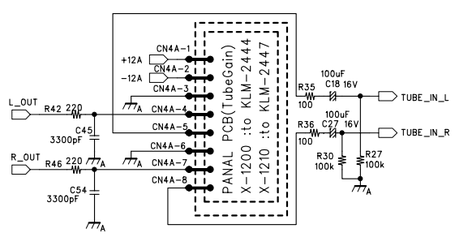

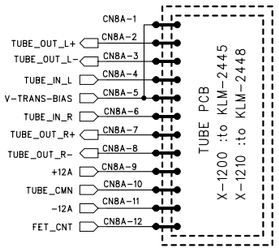

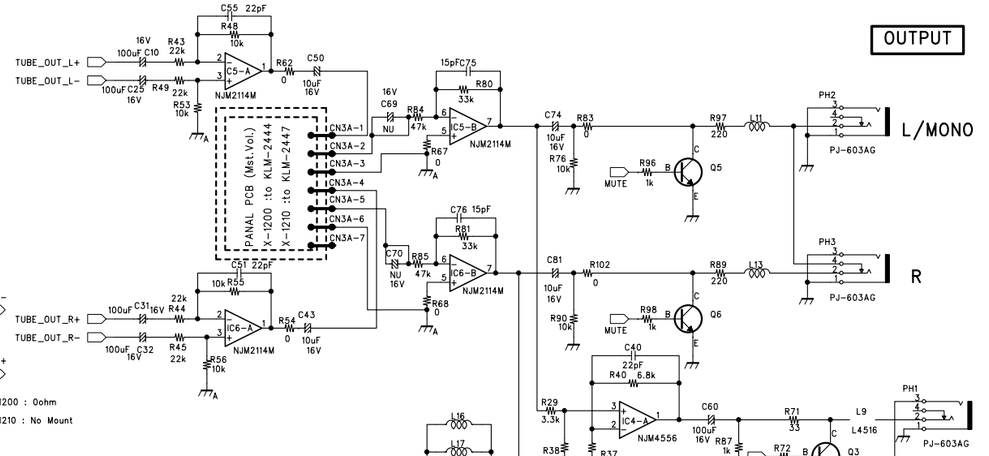

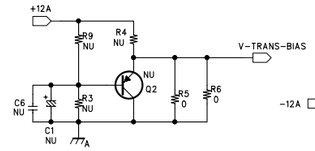

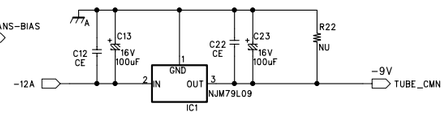

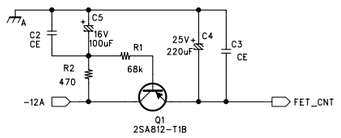

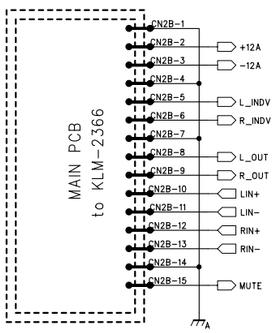

Chip Ceramic Capacitor

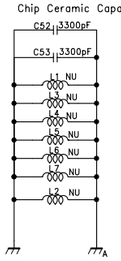

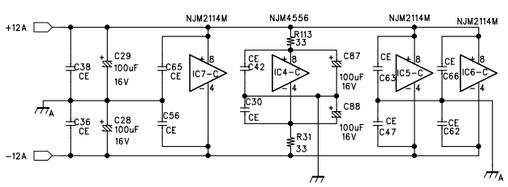

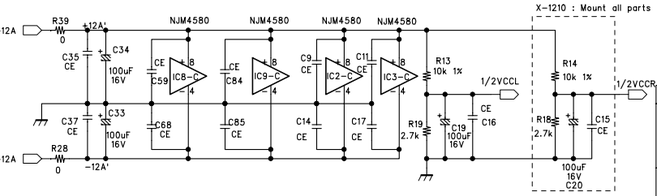

MARK	REVISION REASON	DATE	REVISED BY
△			
△			
△			
△			
△			

DRAWN BY	DESIGNED BY	CHECKED BY	MODEL X-1200/1210 (EMX-1/ESX-1)
C.Hirose	C.Hirose		TITLE: KLM-2369 Jack PCB

KORG | DRAWING NO. KOD-A30537 | DATE '03.06.28

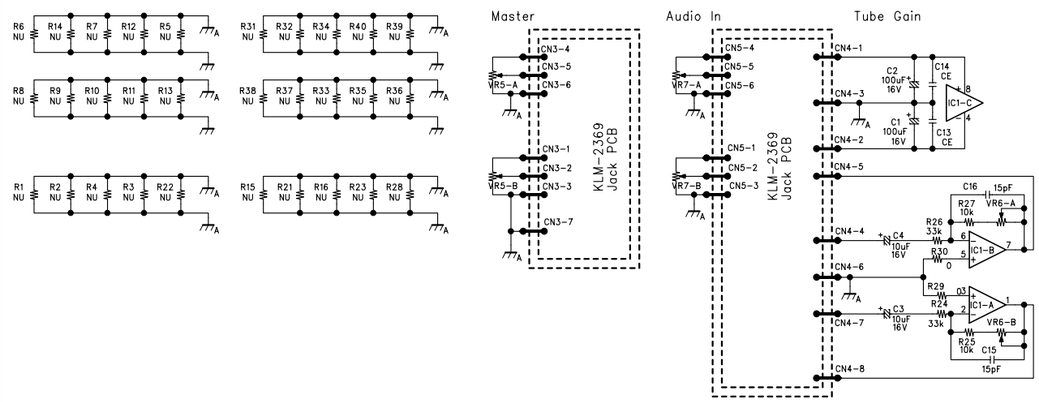

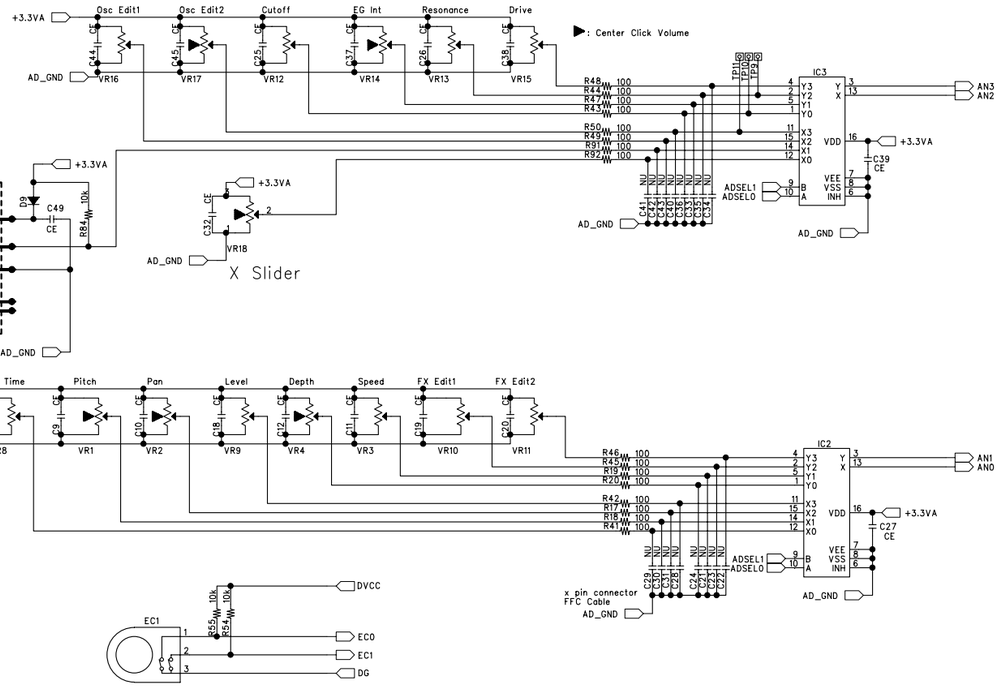

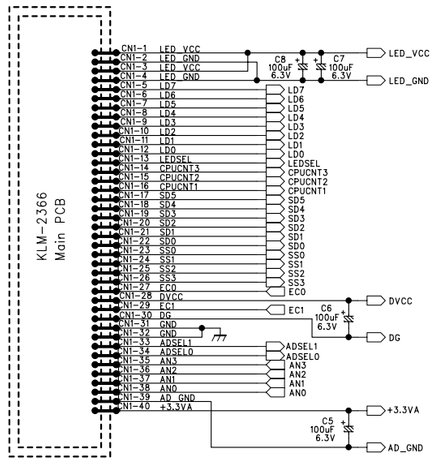

MARK	REVISION REASON	DATE	REVISED BY
△			
△			
△			
△			
△			

DRAWN BY	DESIGNED BY	CHECKED BY	MODEL X-1200(EMX-1)
M.Kuwabara	M.Kuwabara		TITLE Panel PCB KLM-2444 Encoder A/D Analog
KORG	DRAWING NO. KOD-A30538		DATE '03.06.20

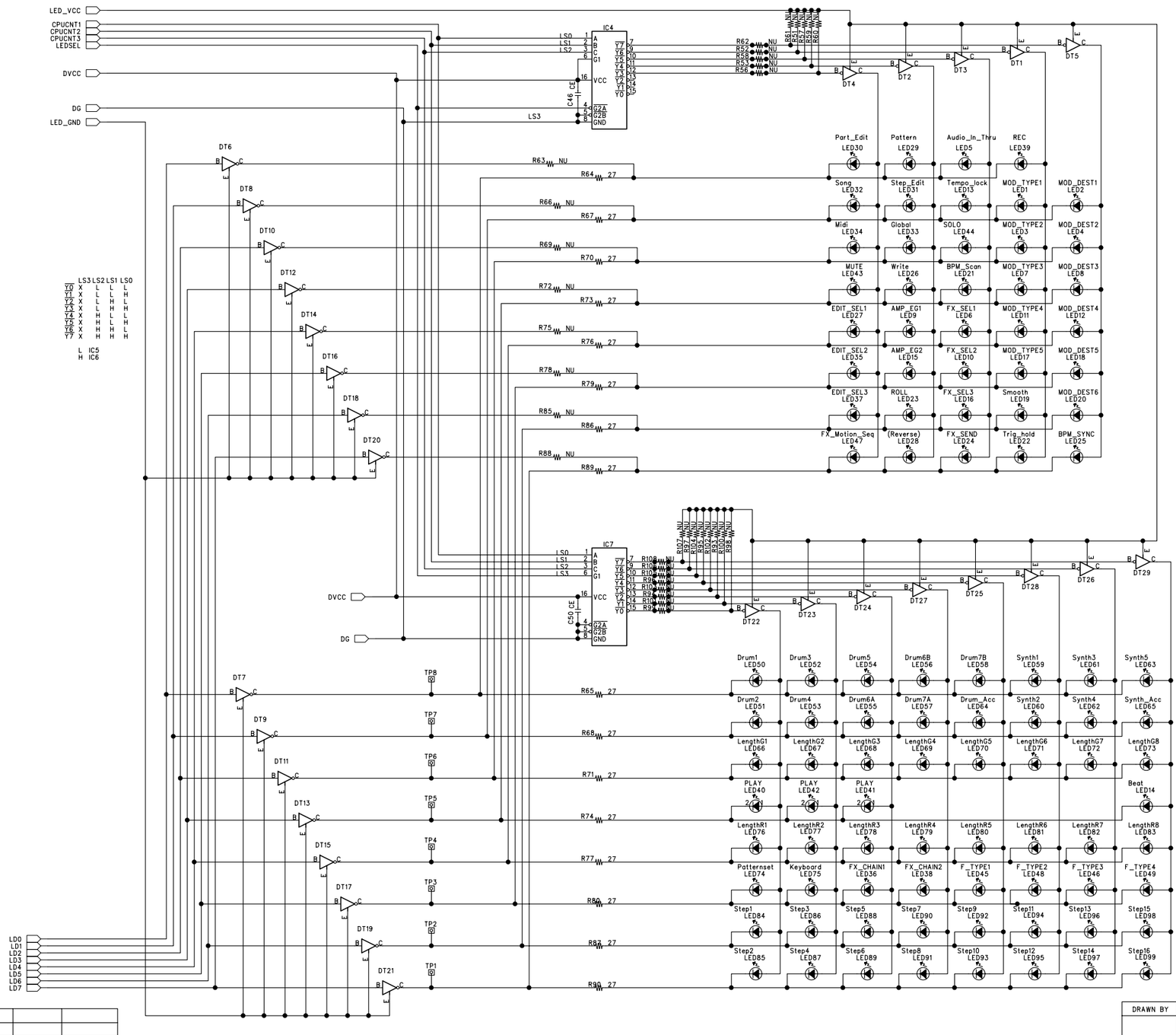

MARK	REVISION REASON	DATE	REVISED BY
△			
△			
△			
△			
△			

DRAWN BY	DESIGNED BY	CHECKED BY	MODEL X-1200(EMX-1)
			TITLE PANEL PCB LED Matrix KLM-2444
KORG	DRAWING NO. KOD-A30539		DATE '03.06.20

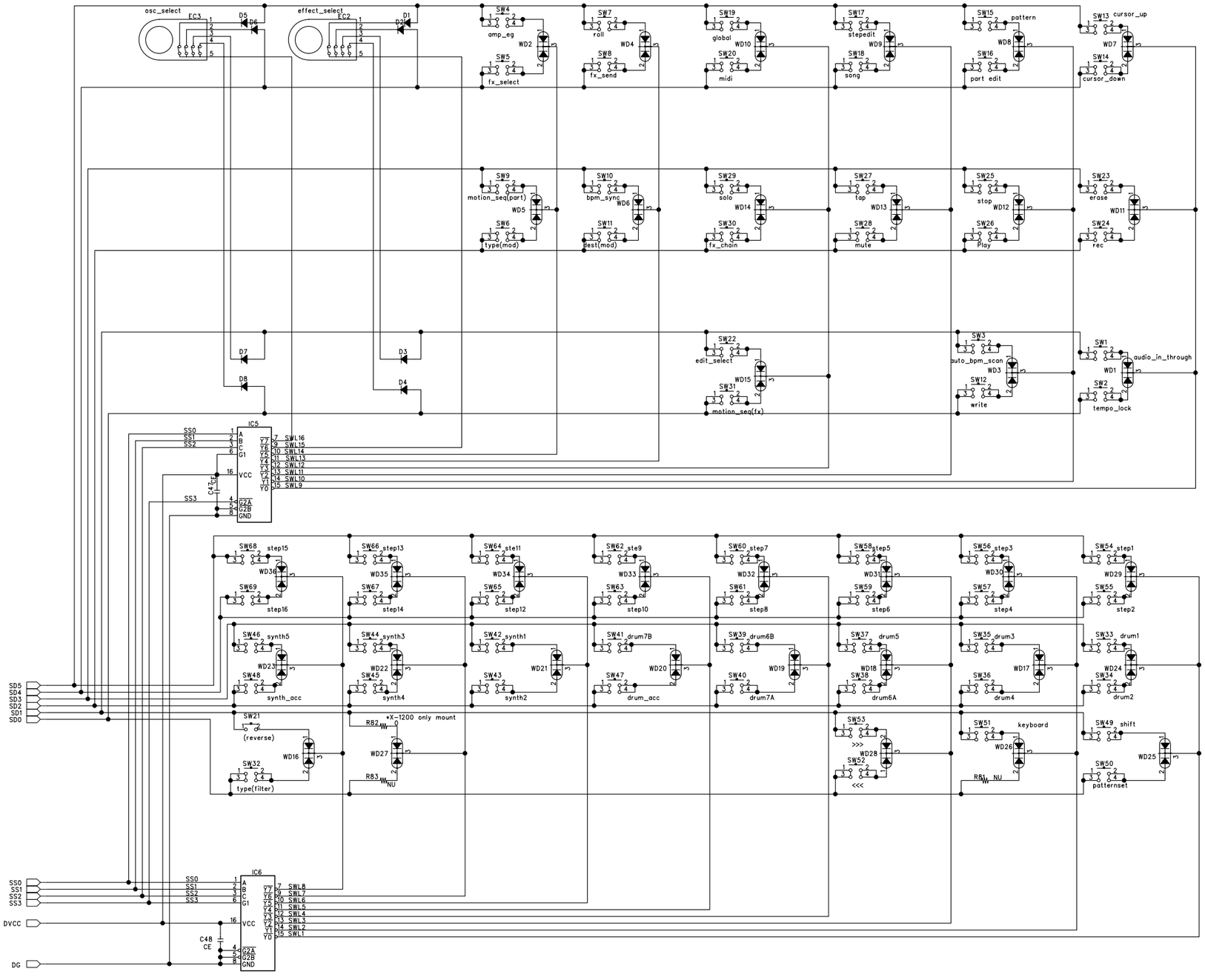

WD[1..29]:MC2838-T12-1

MARK	REVISION REASON	DATE	REVISED BY
△			
△			
△			
△			
△			

DRAWN BY	DESIGNED BY	CHECKED BY	MODEL X-1200(EMX-1)
M.Kuwabara	M.Kuwabara		TITLE: Panel PCB SW Matrix KLM-2444
KORG	DRAWING NO. KOD-A30540		DATE '03.06.20

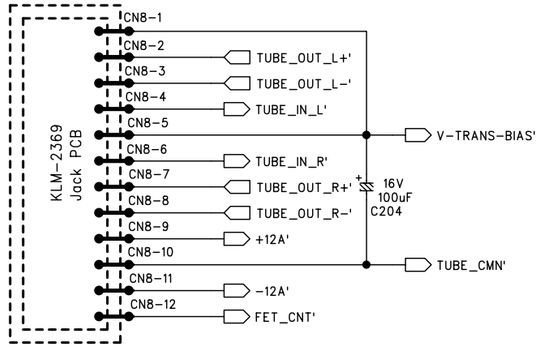

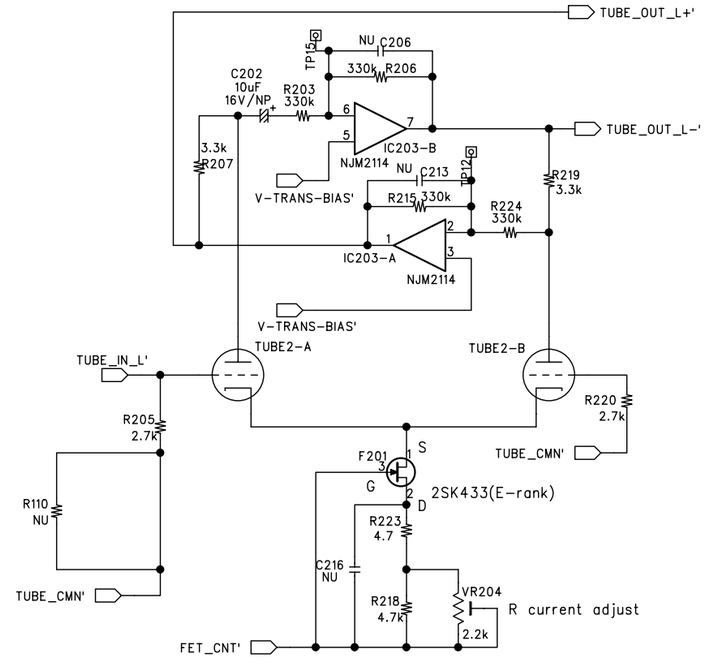

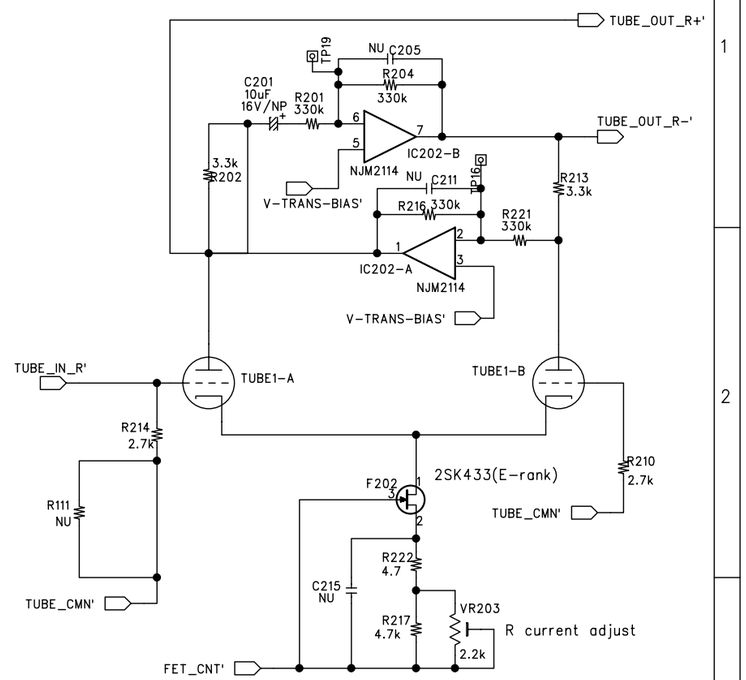

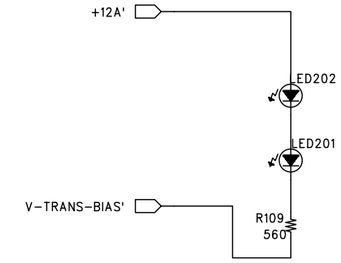

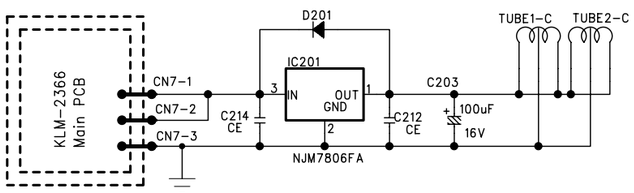

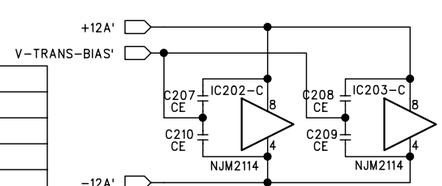

MARK	REVISION REASON	DATE	REVISED BY
△			
△			
△			
△			
△			

DRAWN BY	DESIGNED BY	CHECKED BY	MODEL X-1200(EMX-1)
M.Kuwabara	C.Hirose		TITLE TUBE PCB KLM-2445
KORG	DRAWING NO. KOD-A30541		DATE '03.06.20

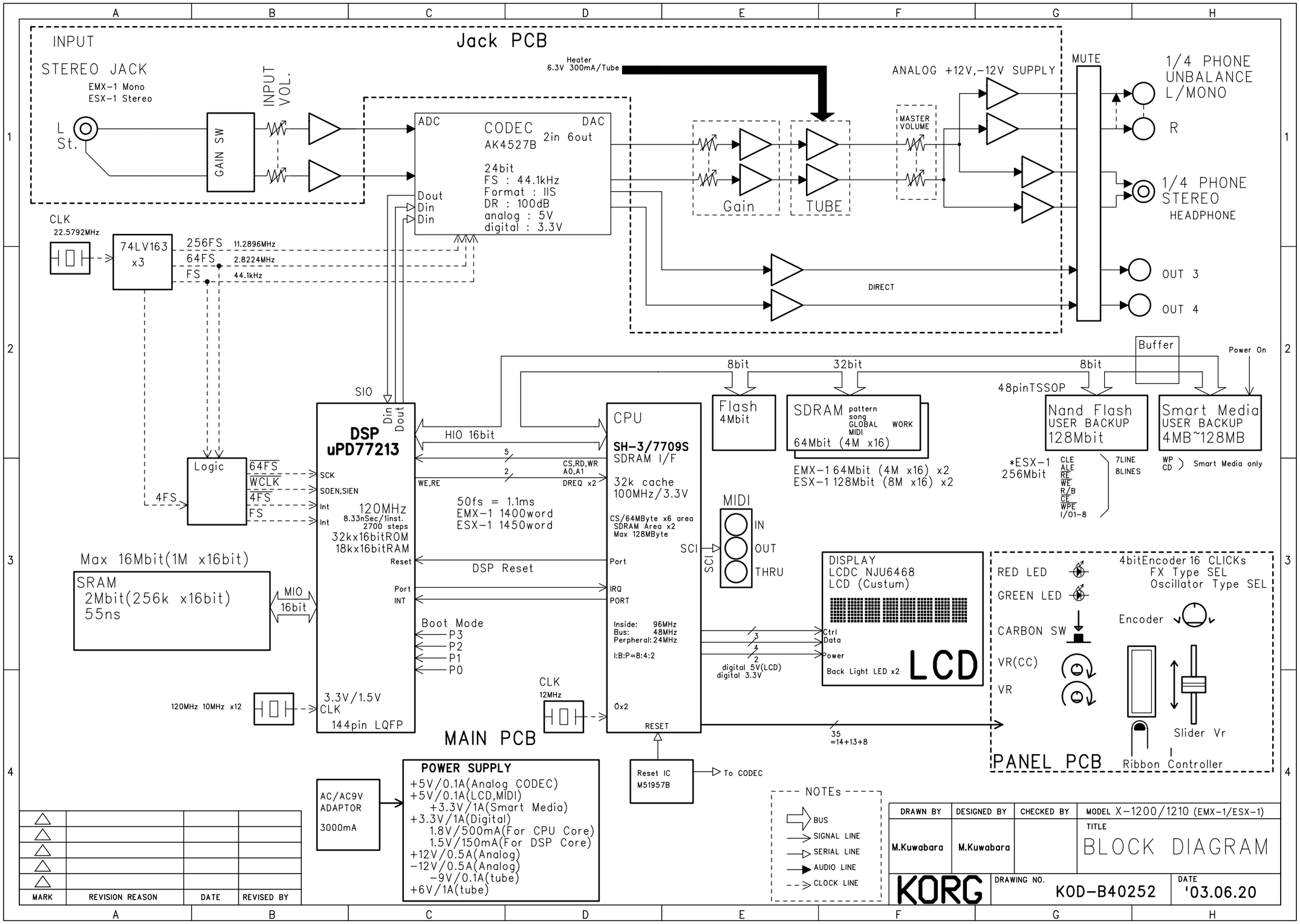

Jack PCB
INPUT
STEREO JACK
EMX-1 Mono
ESX-1 Stereo
L
St.
GAIN SW
INPUT VOL.
Heater
6.3V 300mA/Tube
ADC
CODEC
DAC
AK4527B
2in 6out
24bit
FS : 44.1kHz
Format : IIS
DR : 100dB
analog : 5V
digital : 3.3V
Dout
Din
Din
Gain
TUBE
MASTER VOLUME
ANALOG +12V,-12V SUPPLY
MUTE
1/4 PHONE UNBALANCE L/MONO
R
1/4 PHONE STEREO
HEADPHONE
OUT 3
OUT 4
DIRECT
CLK
22.5792MHz
74LV163 x3
256FS 11.2896MHz
64FS 2.8224MHz
FS 44.1kHz
Buffer
Power On
8bit
32bit
8bit
48pinTSSOP
Flash
4Mbit
SDRAM pattern song GLOBAL MIDI WORK
64Mbit (4M x16)
EMX-1 64Mbit (4M x16) x2
ESX-1 128Mbit (8M x16) x2
Nand Flash
USER BACKUP
128Mbit
Smart Media
USER BACKUP
4MB~128MB
*ESX-1
256Mbit
CLE
ALE
RE
WE
R/B
CE
WPE
I/O1-8
7LINE
8LINES
WP
CD
Smart Media only
SIO
Din
Dout
DSP
uPD77213
HIO 16bit
CPU
SH-3/7709S
SDRAM I/F
32k cache
100MHz/3.3V
CS,RD,WR
A0,A1
DREQ x2
WE,RE
50fs = 1.1ms
EMX-1 1400word
ESX-1 1450word
CS/64MByte x6 area
SDRAM Area x2
Max 128MByte
Logic
64FS
WCLK
4FS
FS
4FS
SCK
SOEN,SIEN
Int
Int
120MHz
8.33nSec/1inst.
2700 steps
32kx16bitROM
18kx16bitRAM
Reset
Port
INT
DSP Reset
Port
IRQ
PORT
Boot Mode
P3
P2
P1
P0
Inside: 96MHz
Bus: 48MHz
Perpheral: 24MHz
I:B:P=8:4:2
0x2
RESET
SCI
MIDI
IN
OUT
THRU
Max 16Mbit(1M x16bit)
SRAM
2Mbit(256k x16bit)
55ns
MIO
16bit
120MHz 10MHz x12
3.3V/1.5V
CLK
144pin LQFP
CLK
12MHz
MAIN PCB
DISPLAY
LCDC NJU6468
LCD (Custum)
Ctrl
Data
Power
Back Light LED x2
LCD
digital 5V(LCD)
digital 3.3V
35
=14+13+8
RED LED
GREEN LED
CARBON SW
VR(CC)
VR
4bitEncoder 16 CLICKs
FX Type SEL
Oscillator Type SEL
Encoder
Slider Vr
Ribbon Controller
PANEL PCB
Reset IC
M51957B
To CODEC
AC/AC9V
ADAPTOR
3000mA
POWER SUPPLY
+5V/0.1A(Analog CODEC)
+5V/0.1A(LCD,MIDI)
+3.3V/1A(Smart Media)
+3.3V/1A(Digital)
1.8V/500mA(For CPU Core)
1.5V/150mA(For DSP Core)
+12V/0.5A(Analog)
-12V/0.5A(Analog)
-9V/0.1A(tube)
+6V/1A(tube)
NOTEs
BUS
SIGNAL LINE
SERIAL LINE
AUDIO LINE
CLOCK LINE
MARK
REVISION REASON
DATE
REVISED BY
DRAWN BY
DESIGNED BY
CHECKED BY
MODEL X-1200/1210 (EMX-1/ESX-1)
M.Kuwabara
M.Kuwabara
TITLE
BLOCK DIAGRAM
KORG
DRAWING NO.
KOD-B40252
DATE
'03.06.20

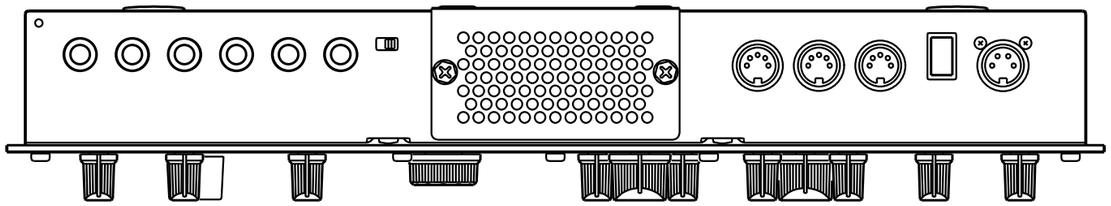

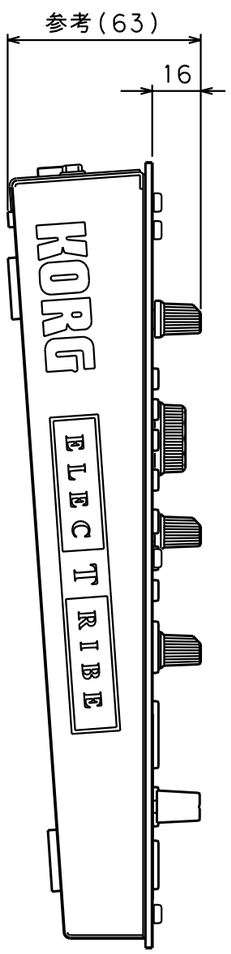

参考(63)

16

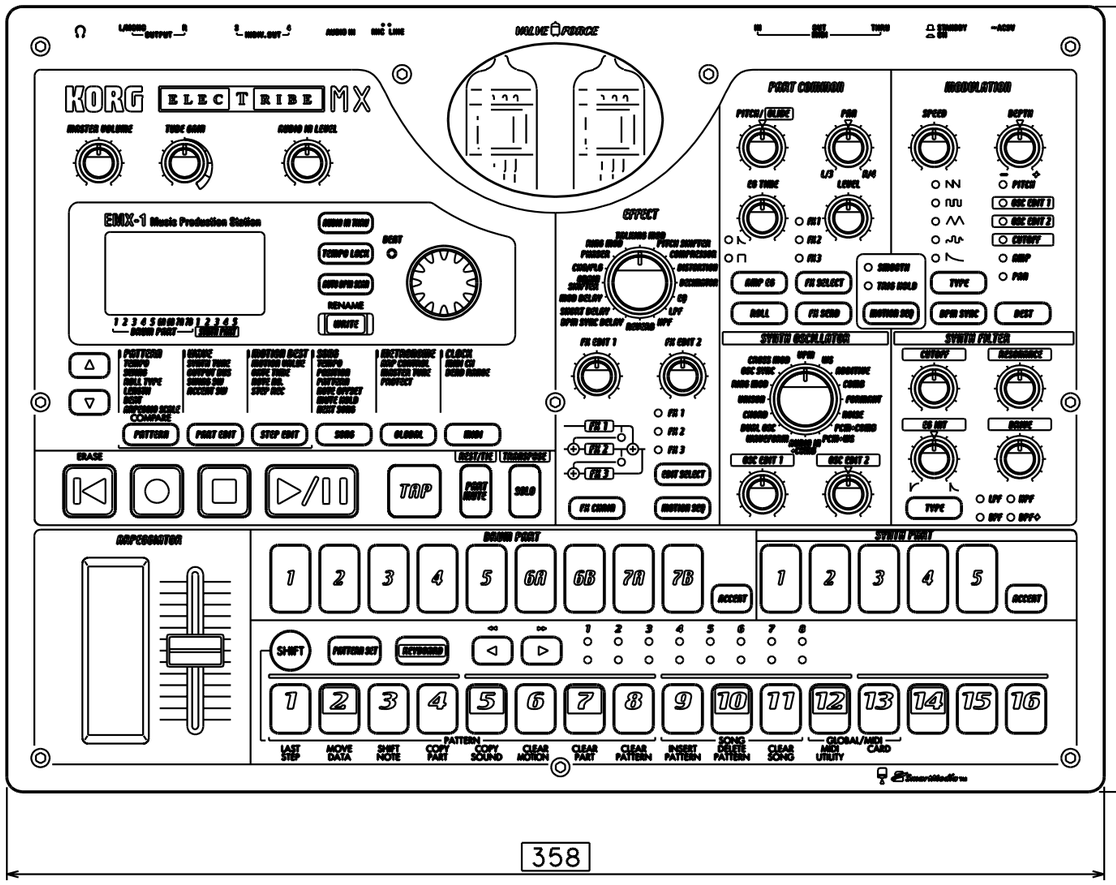

参考(256)

358

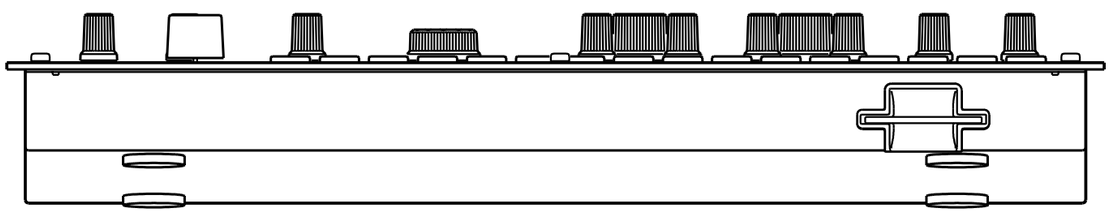

62

256

パワー・スイッチおよびTUBEカバーのビス頭を含む

参考：パワー・スイッチ・ノブを除く奥行き(255.5)

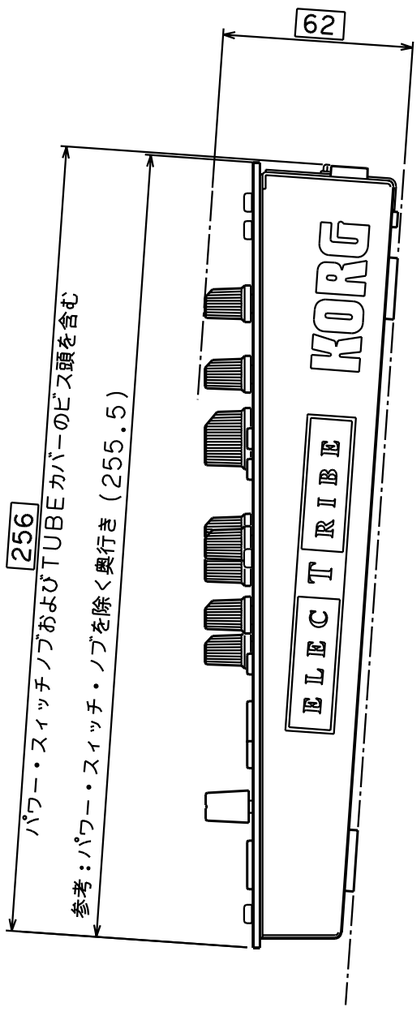

公示寸法表

外形寸法	カタログ公表値	358(W)×256(D)×62(H)
	実測値	358(W)×256.4(D)×61.9(H)
製品重量	カタログ公表値	3.1kg
	実測値	3.05kg

REVISAL MARK	REVISAL REASON	REVISAL DATE	REVISED BY	APPROVED
△				
△				
△				

1	X-1200			EMX-1 外形図	
MODEL		SPECIFICATION		PARTS NAME	PARTS No.
WEIGHT: ××× (g)	DRAWN	CHECKED	APPROVED	TITLE	試作図
	中原 '03/04/10	服部 '03/04/28	安達 '03/04/28	外形図	見積図面
					金型発注図
KORG KORG INC.	SCALE 1/2		DRAWING No. KOC-A30163		量産図面
					総合製作書用図面 ○

A3

EMX-1 Test Mode

How to start and operate the test mode:

ERASE + PATTERN & POWER ON: Internal test,
ERASE + STEP EDIT & POWER ON: Adjustment of valve circuit, L/R balance calibration, Tube gain balance measurement
SHIFT + DRUM PART 1 & POWER ON: Internal skip
SHIFT + DRUM PART 3 & POWER ON: Audio test

16: Proceed the test
SHIFT + 15: Re-executing the test
△ : ITEM UP
▽ : ITEM DOWN
>> : STEP UP
<< : STEP DOWN

NOTE:
To proceed the SmartMedia test, it is required to prepare a SmartMedia whose capacity is more than 16MB.

EMX-1　Valve & L/R Balance Adjust Cable

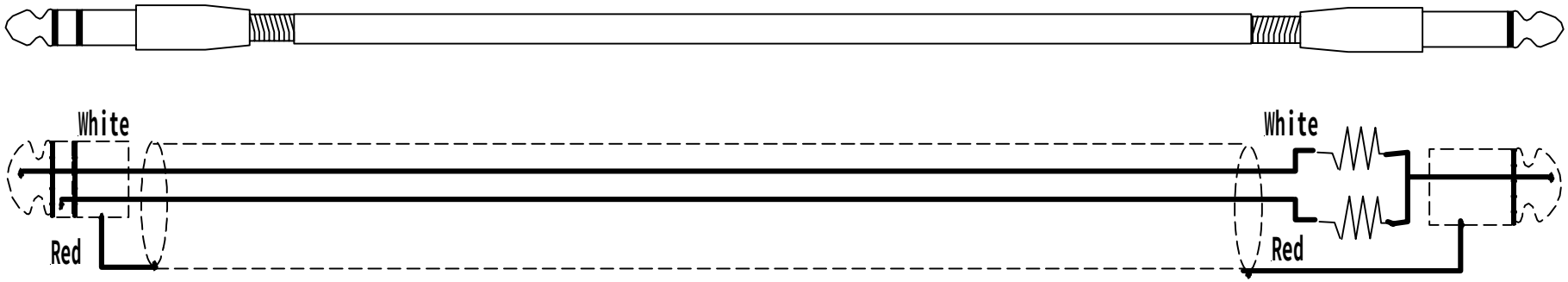

2.2M Ω Metal Film Resistor　x 2

Test Mode 1 (Internal test).

After replacing the main board, please take the following procedures firstly.

1. Connect the audio cable as follows:

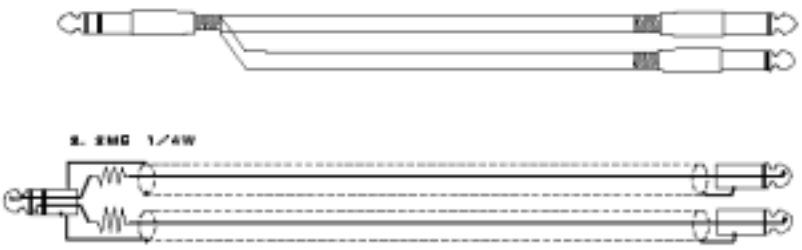

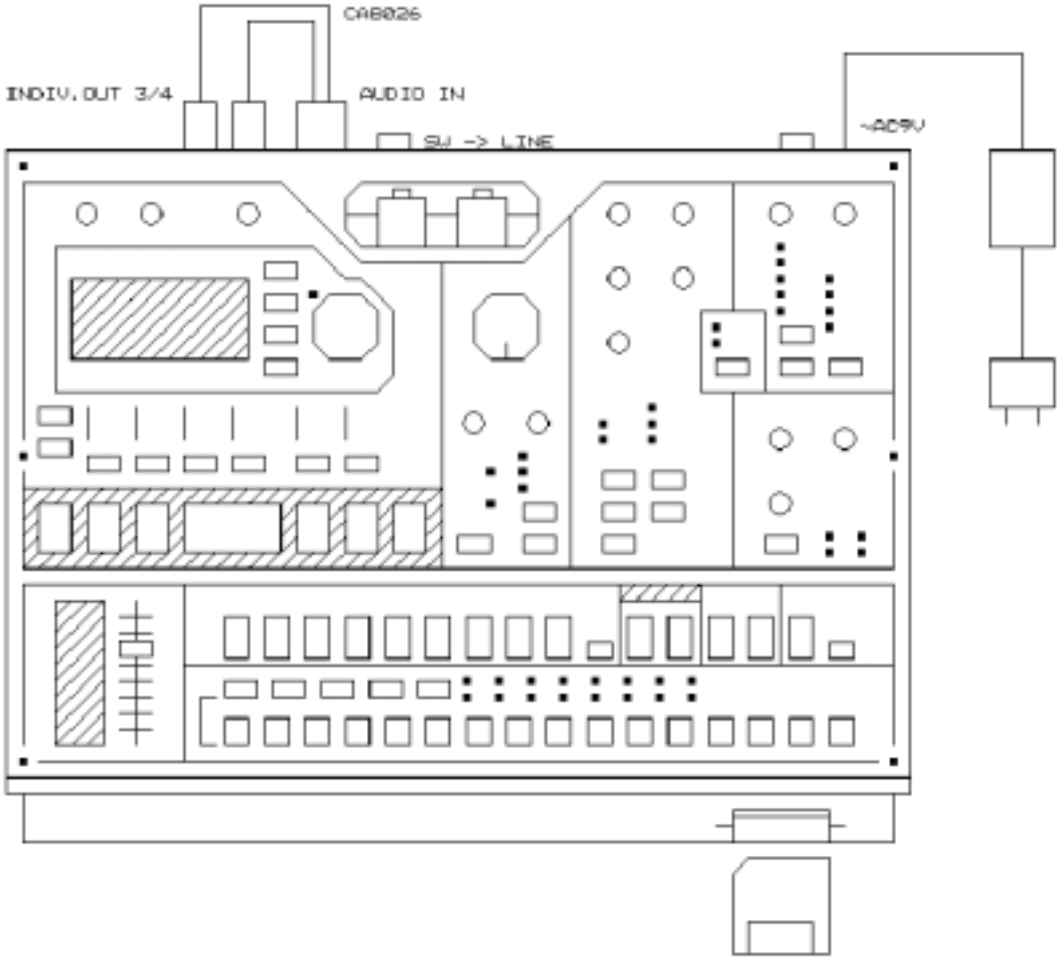

2. Set up the volume knob and switches as follows:

[MASTER VOLUME] : MAX

[TUBE GAIN] : MIN

[AUDIO IN LEVEL] : MAX

[MIC/LINE] : LINE

[EFFECT] : REVERB

[SYNTH OSCILLATOR] : AUDIO IN + COMB

3. Insert the SmartMedia, which is supplied by Korg.

4. Press [ERASE] + [PATTERN] + [STANDBY] (POWER ON)

5. Executing Internal Device check start....

If the internal checking works correctly, it proceeds to the next steps automatically.

If "3>L MIC[16]" is displayed and stops for a while, please switch the MIC/LINE switch to “MIC”.

6-1 Switch and LED check

Once "#PANEL" is displayed, all LED checks start. If OK, press [16].

Press switches indicated in the LED. (Start: [AUDIO IN] ..... End:[16])

6-2. Rotary encoder check <#R.Enc>

If [RE ->>1>-> +000] is displayed, rotate the Dial knob 24 steps to the right.

If [RE ->>1>-> +024] is displayed, press [16].

If [RE <-<1<<- -000] is displayed, rotate Dial knob 24 steps to the right.

If [RE <-<1<<- +024] is displayed, press [16].

6-3. Rotary select check <#R.Sel>

If [BPM SYNC EFFECT] is displayed, rotate EFFECT knob one by one clockwise.

(BPM SYNC --> SHORT DL --> ..... REVERB)

6-4. A/D check <#ADC>

Rotate the knobs to "MIN --> MAX --> MIN".

NOTE: As for the knobs with (c) as below, rotate the knob to the center position and proceed to the next knob.

"MIN --> MAX --> MIN --> CENTER".

[PITCH/GLIDE(c)] -> [PAN(c)] -> [SPEED] -> [DEPTH(c)]
->[EG TIME(c)] -> [LEVEL]-> [FX EDIT 1] -> [FX EDIT 2]
->[CUTOFF] ->[RESONANCE] -> [EG INT(c)]
->[OscEdit1] -> [OscEdit2(c)]

Then, the step proceeds to the slider of the arppeggiator.

6-5. Ribbon check <#Ribbon>

Touch the Ribbon controller. Then <Ribbon ***> is displayed.
Drag upward on the Ribbon. If <Ribbon 127H> is displayed, OK.
Drag downward on the Ribbon. If <Ribbon 001LH> is displayed, OK.
Press [16].

6-6. LCD Dot check <#LCD>

All the LCD dots light up. If no problem, press [16].
All the LCD dots turn off. If no problem, press [16].
Light up the LCD dots half by half alternatively.
Turn off the STANDBY (POWER) switch.

Test Mode 2 (System Data Loading).

After replacing the main board, please take the following procedures secondly.

1. Turn the power ON while pressing ERASE and PARTEDIT. All system and preload data are loaded into the product.

2. Connect the stereo plug of the cable to PHONES and the monaural plug to AUDIO IN.

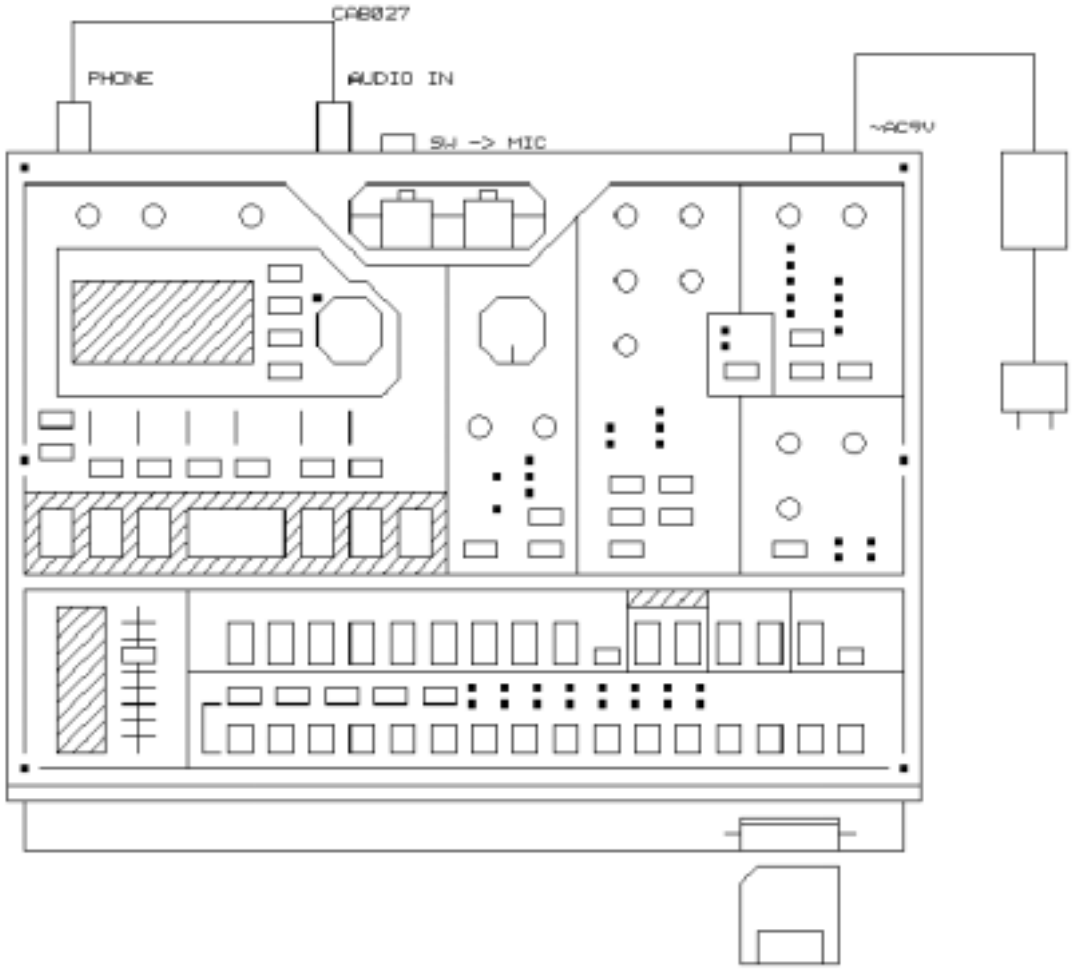

2. Insert the SmartMedia, which is supplied by Korg.

3. Turn the power on while pressing [ERASE] + [PART EDIT].

1. "<NAND> Fmt OK"
2. "<NAND> Init"
3. "<NAND> Format"
4. "<NAND> Sys Ld"
5. "<NAND> DSP Ld"
6. "<NAND> UserLd"

7."<NAND> UserLd"

8. "<NAND> Chking"

NOTE: If the step stops any of the above indications in the display, press [SHIFT]+[15].

If the system data is loaded correctly, "Valv Wup ***sec"(000-160sec) is indicated in the display.

If any other message is displayed such as "@@@@@ x:$$$", it might be an error.

Wait until the tube test counter is displayed as "000sec" (approx 160 seconds later). Then, please proceed to the Tube calibration test.

EMX-1/ESX-1 Tube Calibration

1. Connect the stereo plug of the cable (see fig.) to PHONES and the monaural plug to INPUT.

2. While pressing ERACE and STEP EDIT, turn the power on. “Valv Wup” is indicated as stand-by for pre-heating, and also the waiting time is indicated.

Set up the volume knob and switches as follows:

MASTER VOLUME : MAX
TUBE GAIN : MIN
AUDIO IN LEVEL : MAX
MIC/LINE : MIC

3. “Ajst (L)” and a 4 digits figure are indicated in the LCD. If the value is leas than 0010, the test is O.K.. Press the 16 knob at the right bottom. If the value is over it, it is required to adjust the valve. Adjust the variable resistors which correspond to the channels referring to the photo below.

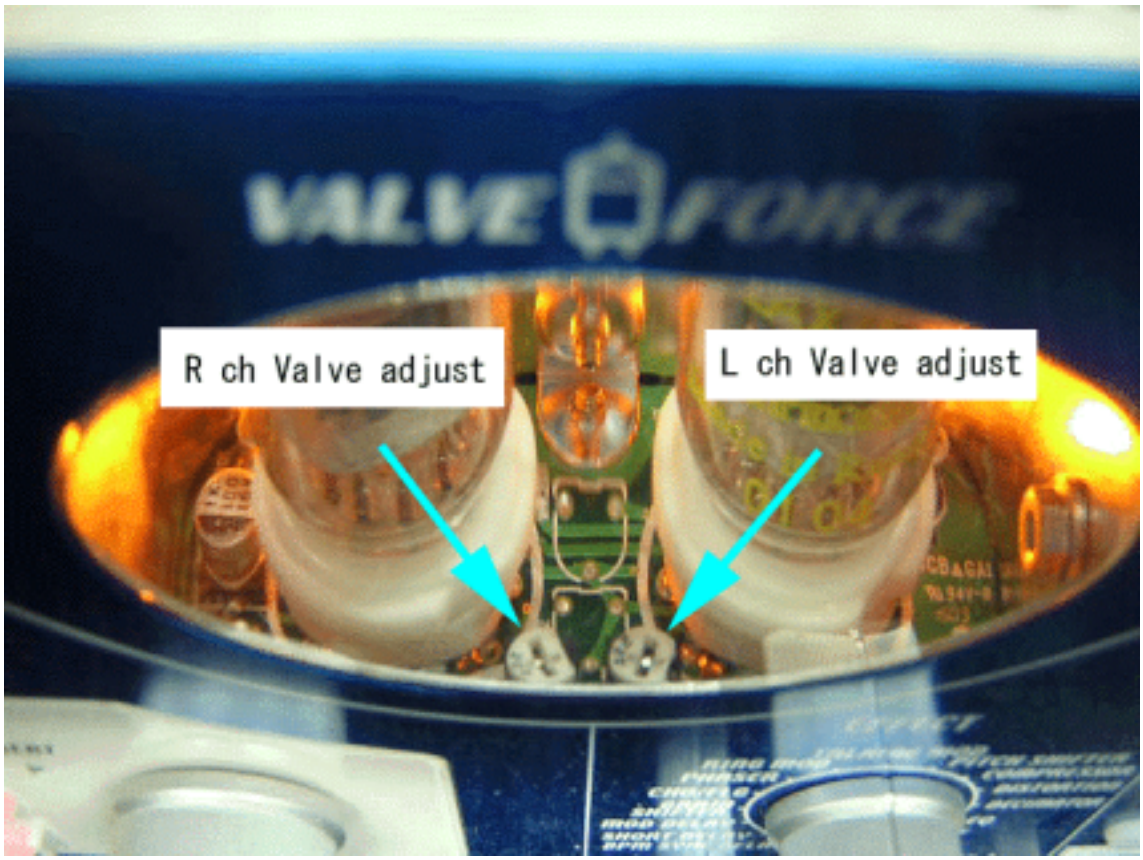

4. As well as “Ajst(L)”, “Ajst (R)” and a 4 digits figure are indicated in the LCD. If the value is leas than 0010, the test is O.K.. Press the 16 knob at the right bottom. If the value is over it, it is required to adjust the valve. Adjust the variable resistors which correspond to the channels referring to the photo above.

5. Once the balance of L/R is automatically adjusted, “ValvGMax GainMx” is indicated in the LCD. Turn the TUBE GAIN knob to MAX, and press the 16 knob.

6. Check the L/R balance of TUBE GAIN MAX, and return to the normal mode.

End.

PART CODE	PART NAME	NOTE	Q'TY
001236600	PCB ASSY KLM-2366 EMX-1	M.PART	1
001236700	PCB ASSY KLM-2367 EMX-1	M.PART	1
001236900	PCB ASSY KLM-2369 EMX-1	M.PART	1
001244400	PCB ASSY KLM-2444/45 EMX-1	M.PART	1
304000070	TR 2SA812-T1B (M5-7) (TS)	KLM-2369	1
304000070	TR 2SA812-T1B (M5-7) (TS)	KLM-2366	1
304010020	TR 2SB1120-F/G (TS)	KLM-2366	1
304020230	TR 2SC3661-TA/TB(3K) (TS)	KLM-2369	6
304020380	DIGITAL TR FP1L2Q-T1B (TS)	KLM-2444/45	13
304050140	DIGITAL TR DTC114EKA T146(TS)	KLM-2444/45	8
304060070	FET 2SK433-T12-1C (TS)	KLM-2444/45	2
304060250	FET CPH6302-TL(TS)	KLM-2366	1
312051600	LED SLP-190B-51	KLM-2444/45	8
312052300	LED SLP-290B-51	KLM-2444/45	9
314001400	DIODE RLS-73 TE-11 (TS)	KLM-2366	1
314001400	DIODE RLS-73 TE-11 (TS)	KLM-2444/45	9
314030600	DIODE 1SR154-400TE25(TS)	KLM-2366	10
314030700	DIODE RB051L-40TE25(TS)	KLM-2444/45	1
314030700	DIODE RB051L-40TE25(TS)	KLM-2366	1
315000500	DOUBLE DIODE MC-2840-T12-1(TS)	KLM-2366	10
315000600	DOUBLE DIODE MC2838-T12-1 (TS)	KLM-2444/45	36
320001610	IC UPD77213GJ-301-8EN	KLM-2366	1
320004688	IC HD6417709SF100B(S)	KLM-2366	1
320009103	IC NJU6468FG1-00	KLM-2367	1
320012317	IC MBM29LV004TC-90TN	KLM-2366	1
320018007	IC AK4527BVQ (S)	KLM-2366	1
324003071	IC TC58128AFT(EL)	KLM-2366	1
324007002	IC BA10358F-T1(2K) (TS)	KLM-2366	2
324007005	IC BA05FP-E2 (TS)	KLM-2366	1
324009004	IC NJM78L05UA-TE2 (TS)	KLM-2366	1
324009036	IC NJM4556AM-T1	KLM-2369	1
324009039	IC NJM4580M-TE1 (TS)	KLM-2369	2
324009041	IC NJM79L09UA-TE1(TS)	KLM-2369	1
324009048	IC NJM2114M-TE2 (TS)	KLM-2369	3
324009048	IC NJM2114M-TE2 (TS)	KLM-2444/45	3
324009051	IC NJM78M12DLA-TE1(TS)	KLM-2366	1
324009052	IC NJM79M12DLA-TE1(TS)	KLM-2366	1
324017009	IC RN5RG33AA-TR (TS)	KLM-2366	1
324017021	IC EM638165TS-10(TS)	KLM-2366	2
324021014	IC SN74LV138ANS-EL (TS)	KLM-2444/45	4
324021103	IC SN74LV32APWR (TS)	KLM-2366	1
324021105	IC SN74LV245APWR (TS)	KLM-2366	1
324021109	IC SN74LV244APWR (TS)	KLM-2366	1
324021114	IC SN74LV05APWR (TS)	KLM-2366	1
324023008	IC S-8520F33MC-BNS-T2(TS)	KLM-2366	1
324046004	IC T15V2M16B-55S (44TSOP2)	KLM-2366	1
334000600	PHOTO COUPLER PC-410K (TS)	KLM-2366	1
335012200	XTAL OSC HC-49US 22.5792MHZ	KLM-2366	1
350002222	SEMI FIXED VR RH0615C J3 2.2K	KLM-2444/45	2
370004500	ROTARY ENCODER EC16B242041SA	KLM-2444/45	1
370005700	4BIT ENCODER REB161PVB20FHGRY1	KLM-2444/45	2
375014800	PSW SDKLA10200	KLM-2366	1
404000500	CHIP INDUCTOR BLM21B102SPT TS	KLM-2369	8

PART CODE	PART NAME	NOTE	Q'TY
404001070	CHIP INDUCTOR BLM11B102SPT:TS	KLM-2366	48
415004500	TOUCH SHEET FS-MR048-08 10KS	M.PART	1
454012707	DIN SOCKET DJ-004-C	KLM-2366	1
454012709	DIN SOCKET DS-05-02(W/OUT SW)	KLM-2366	3
474029500	SM CONNECTOR CN015R-3013-0	KLM-2366	1
620018200	POWER SW KNOB KOC-E40224	M.PART	1
644003000	X-507 GND SPRING KOC-C46014	M.PART	1
646077600	X-0400 BL PLATE KOC-E40525	M.PART	1
*12AX7EH	VACUUM TUBE 12AX7EH	KLM-2444/45	2
*312X120000	LED MT-12-21 UYC-A6 (YELLOW)	KLM-2367	2
*312X120001	CHIP LED SML-212VTT86 (RED)	KLM-2444/45	78
*312X120002	CHIP LED KM2520MGC03 (GREEN)	KLM-2444/45	3
*312X120003	CHIP LED SML-212YT (YELLOW)	KLM-2444/45	2
*313X120000	LCD DLC-90102G4GF	M.PART	1
*324X040005	IC TC7WHU04FK	KLM-2366	2
*324X040006	IC TC7WH04FK	KLM-2366	2
*324X040007	IC TC7WH74FK	KLM-2366	1
*324X040008	IC TC7WH08FK	KLM-2366	1
*324X120000	IC M51957BFP-600C (TS)	KLM-2366	1
*324X120001	IC S-L2980A15PN-C6ATF	KLM-2366	1
*324X120002	IC NJU7223DL1-18	KLM-2366	1
*324X120003	IC HD74LV163A	KLM-2366	3
*324X120004	IC HD74LV14A	KLM-2366	1
*324X120005	IC SN74LV126APWR	KLM-2367	1
*324X120006	IC SN74AHCT244PWR	KLM-2367	1
*324X120007	IC SN74LV4052ANS (TS)	KLM-2444/45	2
*324X120008	IC NJM7806FA	KLM-2444/45	1
*335X120000	CRYSTAL OSC HC-49US 12.00MHZ	KLM-2366	1
*335X120001	CRYSTAL OSC HC-49US 10.00MHZ	KLM-2366	1
*362X120000	VR R1111NOA-V1B103FH00-00 10KB	KLM-2444/45	9
*362X120001	VR R1111NOA-V1B103FH01-00 10KB	KLM-2444/45	5
*362X120002	VR R1111RGOA-V1B103FH00 10KBX2	KLM-2444/45	2
*362X120003	VR R1111GOA-V1B503FH00 50KBX2	KLM-2444/45	1
*365X120000	SVR RS45111C6008 10KB	KLM-2444/45	1
*373X150000	SLIDE SW SK-22D06G8	KLM-2369	1
*404X040001	CHIP INDUCTOR C6-K3.0L 10UH	KLM-2366	1
*404X120001	CHIP INDUCTOR BLM41PG102SN1D	KLM-2366	3
*404X120002	CHOKE COIL WBR6H-3T-Y2F	KLM-2366	2
*404X120003	CHOKE COIL PLH10AN1112R6P2B	KLM-2366	1
*404X120004	CHIP INDUCTOR C13-K4.5L 22UH	KLM-2366	1
*404X120005	CHIP INDUCTOR BLM41PG102SN1	KLM-2369	2
*405X120000	AC ADAPTER KA-161E 100V	M.PART 100JP	1
*405X120001	AC ADAPTER KA-163E 120V	M.PART 117EX	1
*405X120001	AC ADAPTER KA-163E 120V	M.PART 117US	1
*405X120001	AC ADAPTER KA-163E 120V	M.PART 117CN	1
*405X120002	AC ADAPTER KA-165E 240V	M.PART 240AU	1
*405X120003	AC ADAPTER KA-169E 230V	M.PART 230GE	1
*405X120003	AC ADAPTER KA-169E 230V	M.PART 230FR	1
*405X120003	AC ADAPTER KA-169E 230V	M.PART 230UK	1
*405X120003	AC ADAPTER KA-169E 230V	M.PART 230WC	1
*454X120000	PHONE JACK PJ-603AG	KLM-2369	6
*464X120000	CHIP FUSE 0433.750NR	KLM-2366	1
*471X120000	PIN HEADER JS-1125-3	KLM-2366	1

PART CODE	PART NAME	NOTE	Q'TY
*471X120001	PIN HEADER JS-1125-10	KLM-2366	1
*471X120002	PIN HEADER JS-1125-15	KLM-2366	1
*471X120003	FLAT CABLE CONNECTOR BA-40R	KLM-2366	1
*471X120004	PIN HEADER JS-1125-6	KLM-2369	1
*471X120005	PIN HEADER JS-1125-8	KLM-2369	1
*471X120006	PIN HEADER JS-1125-12	KLM-2369	1
*471X120007	PIN HEADER JS-1125-7	KLM-2369	1
*471X120008	FPC CONNECTOR 5597-05APB	KLM-2444/45	1
*475X120000	HARNESS HNS-3215 BOARD IN	KLM-2367	1
*475X120001	HARNESS HNS-3214 BOARD IN	KLM-2369	1
*475X120002	HARNESS HNS-3219 BOARD IN	KLM-2444/45	1
*475X120003	HARNESS HNS-3217 BOARD IN	KLM-2444/45	1
*475X120004	HARNESS HNS-3218 BOARD IN	KLM-2444/45	1
*475X120005	HARNESS HNS-3220 BOARD IN	KLM-2444/45	1
*475X120006	HARNESS HNS-3216 BOARD IN	KLM-2444/45	1
*475X120007	HARNESS HNS-3213 BOARD IN	KLM-2444/45	1
*480X120000	TUBE SOCKET 9PINPCG2C9-Y	KLM-2444/45	2
*500X040000	INTER CONNECTOR YP L58XH6.0XW2	M.PART	2
*500X851003	X-8510 URETHANE-LEG F40709	M.PART	4
*575X120000	LED SPACER LEDH-6	KLM-2444/45	1
*575X120001	LED HOLDER KOC-E30318	KLM-2444/45	1
*580X120000	X-1200 LENS SHEET KOC-F41050	M.PART	2
*620X120000	X-1200 PATTERN KEY KOC-E30294	M.PART	1
*620X120001	X-1200 PART KEY KOC-E30295-1	M.PART	1
*620X120002	X-1200 EDIT KEY KOC-E30296-1	M.PART	1
*620X120003	X-1200 SELECT KEY-M KOC-E30297	M.PART	1
*620X120004	X-1200 SLIDER KNOB KOC-E40557	M.PART	1
*620X120005	X-1200 VR KNOB-S KOC-E30312	M.PART	17
*620X120006	X-1200 VR KNOB-L KOC-E30313	M.PART	2
*620X120007	X-1200 ENCODER KNOB KOC-E30301	M.PART	1
*630X040000	X-0400 REFLECTION SHEET F40971	M.PART	1
*630X040001	X-0400 SHEET KOC-F40972	M.PART	1
*630X120000	X-1200 LCD WINDOW KOC-E30311-1	M.PART	1
*630X120001	X-1200 TUBE LENS KOC-E30302	M.PART	1
*641X120000	X-1200 PANEL KOC-C20392	M.PART	1
*641X120001	X-1200 PANEL CHASSIS C20394	M.PART	1
*641X120002	X-1200 BOTTOM CASE KOC-C20395	M.PART	1
*641X120003	X-1200 TUBE BRACKET C30598	M.PART	1
*641X120004	X-1200 TUBE COVER KOC-C41286	M.PART	1
*641X120005	X-1200 TOUCH SHEET BRACKET	M.PART	1
*646X120000	X-1200 SW FRAME KOC-E10206	M.PART	1
*646X120001	X-1200 SM SLOT KOC-E20224	M.PART	1