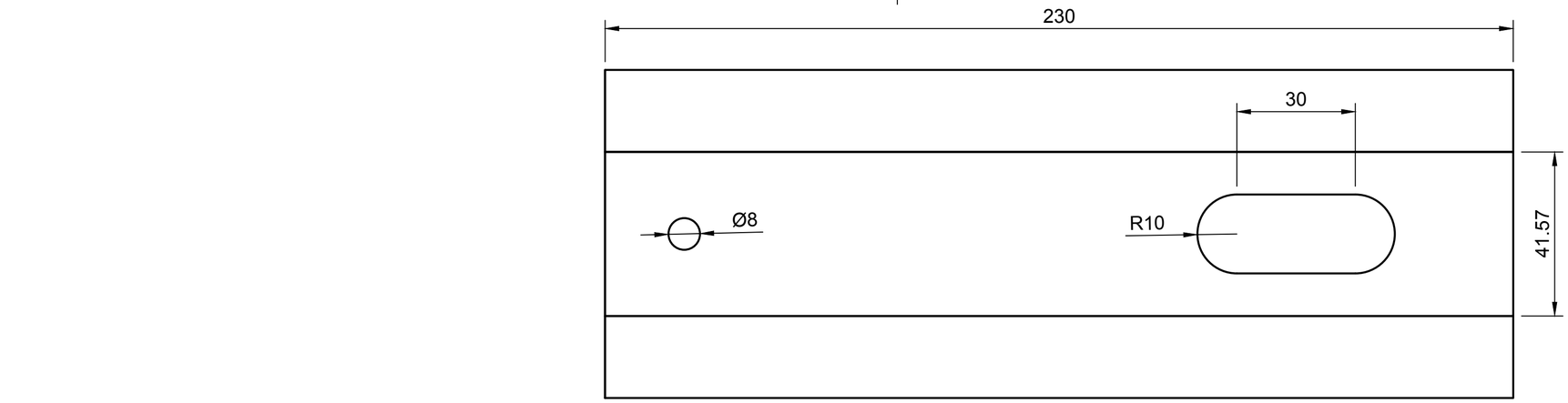

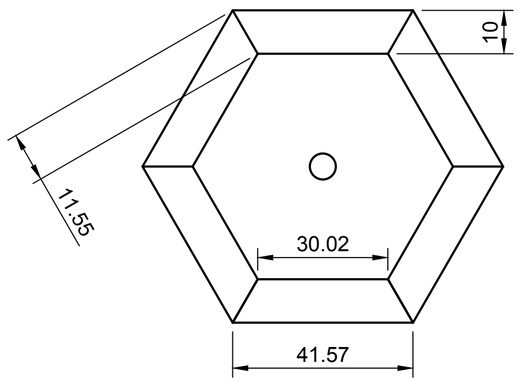

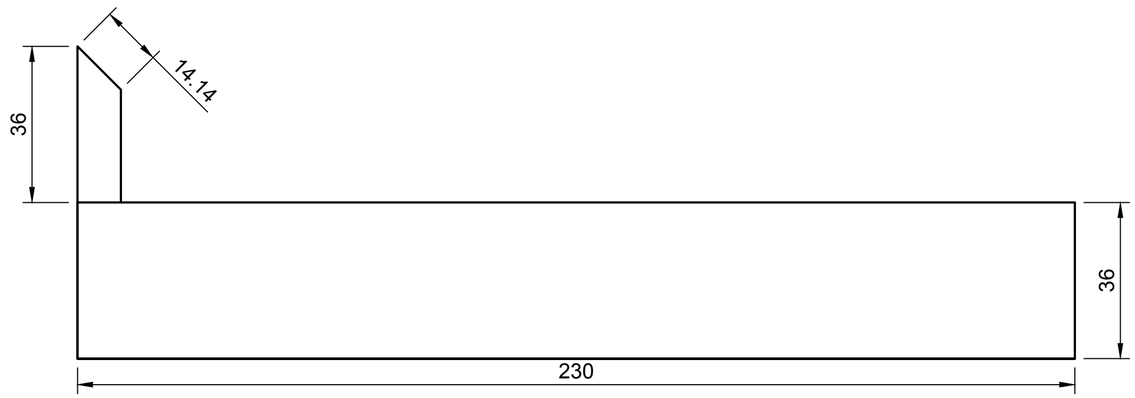

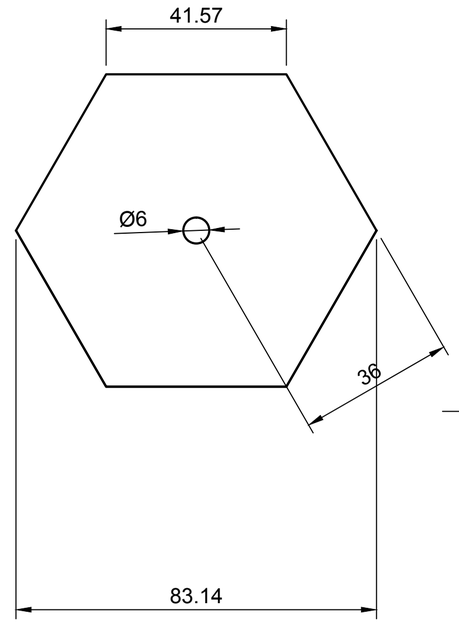

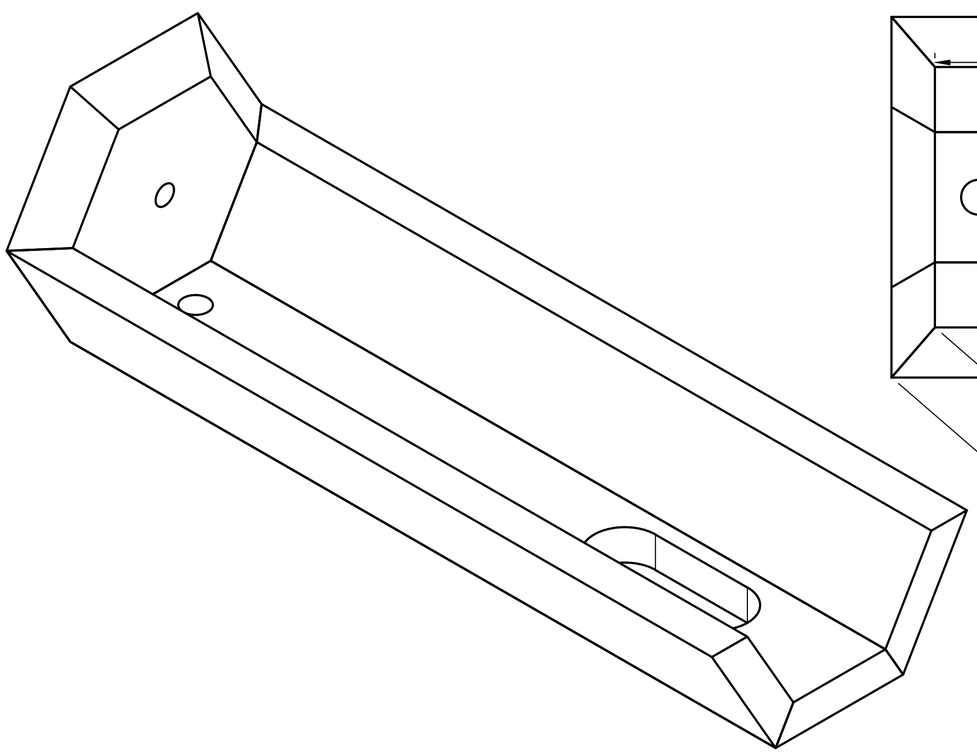

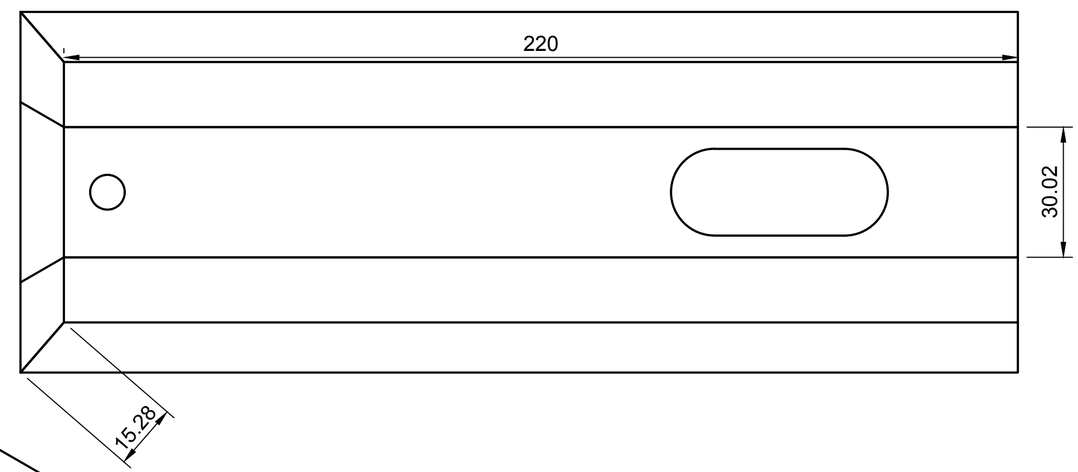

Dept.	Technical reference	Created by ares pedroli 06.01.24	Approved by
		Document type	Document status
		Title Dye Radio_(final_assembly)	DWG No.
			Rev. / Date of issue / Sheet 1/1