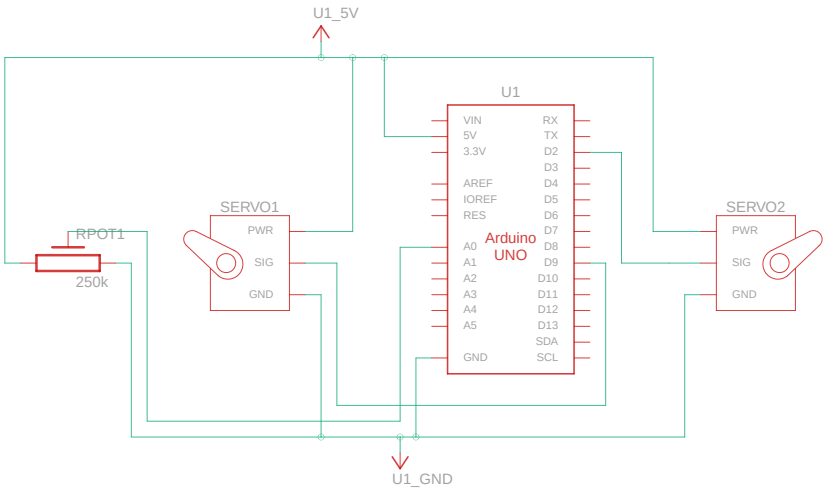

Made with Tinkercad®

Title: 4_2 Servomotores y un potenciometro

Date: 5/9/2024, 3:38:16 p.m.

Sheet: 1/1