Flip-Flop D

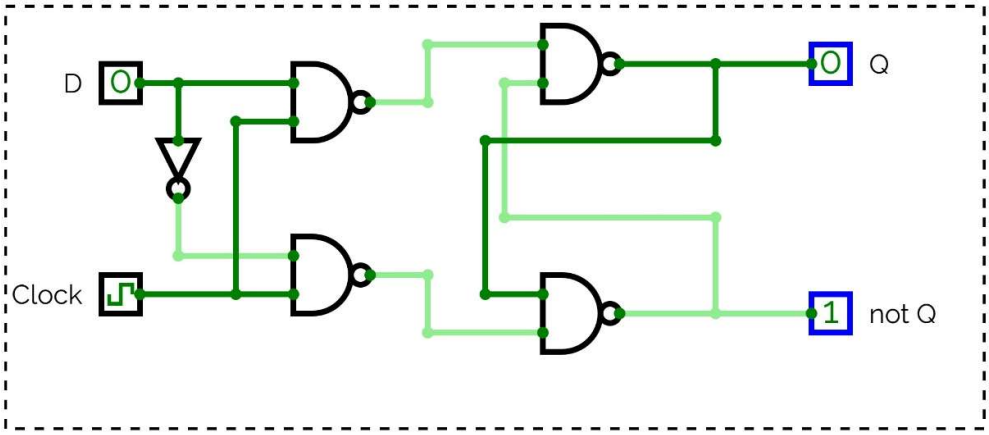
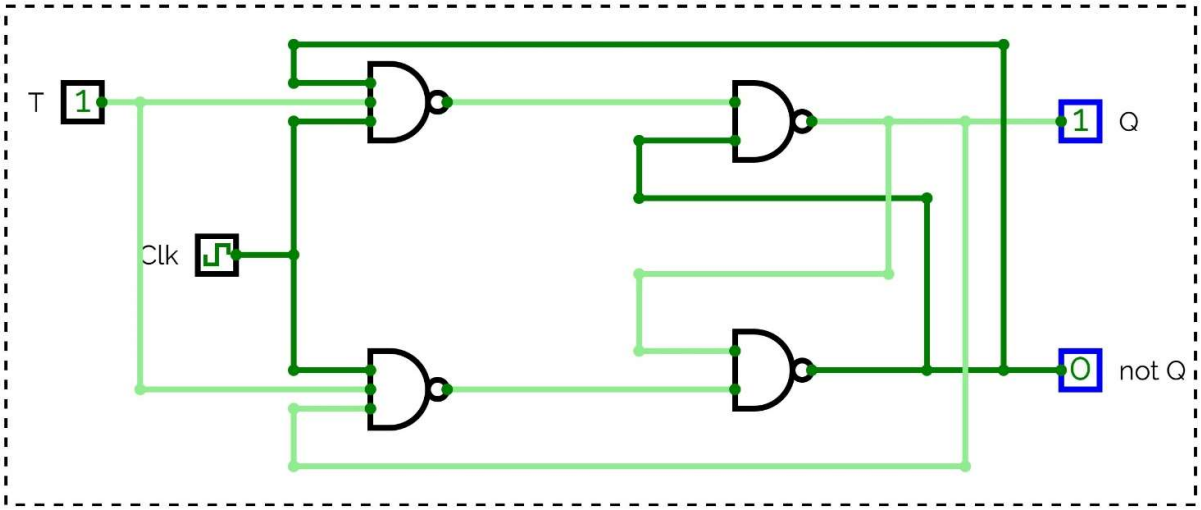
Flip-Flop T