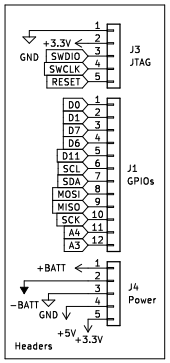
J3
JTAG
+3.3V
GND
SWDIO
SWCLK
RESET
J1
GPIOs
D0
D1
D7
D6
D11
SCL
SDA
MOSI
MISO
SCK
A4
A3
J4
Power
+BATT
−BATT
GND
+5V
+3.3V
Headers

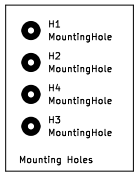
H1
MountingHole
H2
MountingHole
H4
MountingHole
H3
MountingHole
Mounting Holes

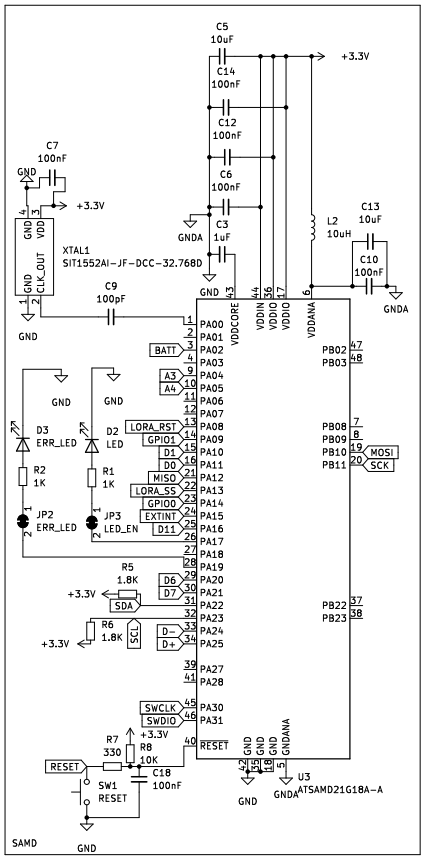
C5
10uF
C14
100nF
C12
100nF
C6
100nF
C3
1uF
+3.3V
GNDA
L2
10uH
C13
10uF
C10
100nF
C7
100nF
GND
XTAL1
SIT1552AI-JF-DCC-32.768D
C9
100pF
VDDCORE
VDDIN
VDDIO
VDDANA
BATT
A3
A4
D3
ERR_LED
D2
LED
R2
1K
R1
1K
JP2
ERR_LED
JP3
LED_EN
LORA_RST
GPIO1
D1
D0
MISO
LORA_SS
GPIO0
EXTINT
D11
MOSI
SCK
R5
1.8K
D6
D7
SDA
R6
1.8K
SCL
D−
D+
SWCLK
SWDIO
RESET
R7
330
R8
10K
C18
100nF
SW1
RESET
U3
ATSAMD21G18A-A
SAMD

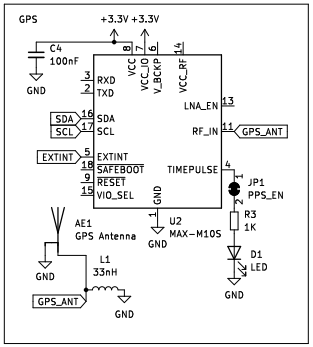
GPS
+3.3V +3.3V
C4
100nF
RXD
TXD
SDA
SCL
EXTINT
SAFEBOOT
RESET
VIO_SEL
VCC_IO
V_BCKP
VCC_RF
LNA_EN
RF_IN
TIMEPULSE
GPS_ANT
JP1
PPS_EN
R3
1K
D1
LED
U2
MAX-M10S
AE1
GPS Antenna
L1
33nH

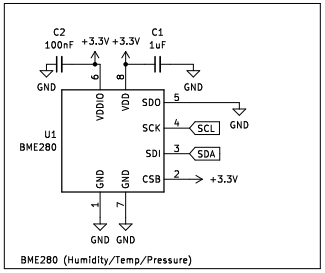
C2
100nF
+3.3V +3.3V
C1
1uF
U1
BME280
VDDIO
VDD
SDO
SCK
SDI
CSB
GND
SCL
SDA
+3.3V
BME280 (Humidity/Temp/Pressure)

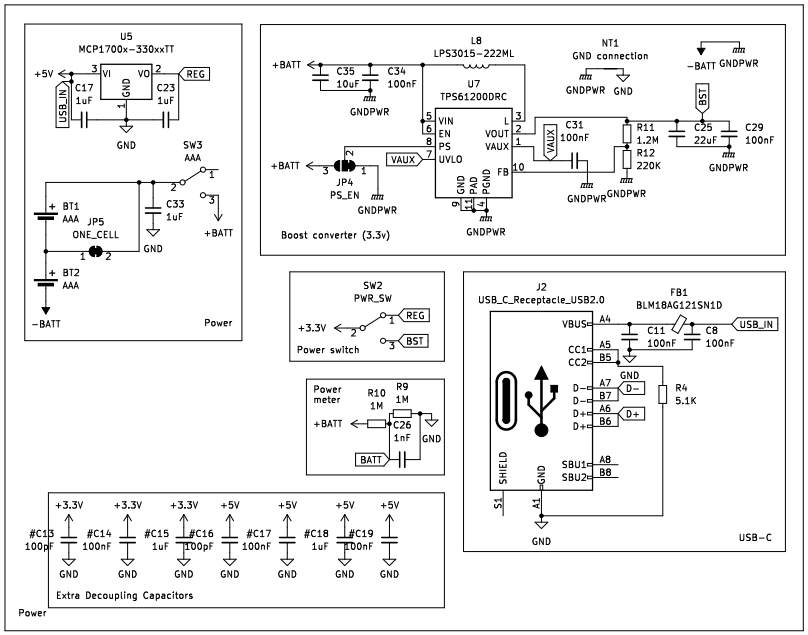
U5
MCP1700x-330xxTT
+5V
C17
1uF
C23
1uF
REG
USB_IN
GND
SW3
AAA
BT1
AAA
JP5
ONE_CELL
C33
1uF
+BATT
BT2
AAA
−BATT
Power
L8
LPS3015-222ML
+BATT
C35
10uF
C34
100nF
GNDPWR
U7
TPS61200DRC
VIN
EN
PS
UVLO
VOUT
VAUX
FB
GND
PGND
JP4
PS_EN
VAUX
C31
100nF
R11
1.2M
R12
220K
C25
22uF
C29
100nF
BST
NT1
GND connection
−BATT
Boost converter (3.3v)
SW2
PWR_SW
+3.3V
REG
BST
Power switch
Power meter
R10
1M
R9
1M
C26
1nF
BATT
J2
USB_C_Receptacle_USB2.0
FB1
BLM18AG121SN1D
VBUS
CC1
CC2
D−
D+
SBU1
SBU2
SHIELD
C11
100nF
C8
100nF
USB_IN
R4
5.1K
S1
A1
USB-C
#C13
100pF
#C14
100nF
#C15
1uF
#C16
100pF
#C17
100nF
#C18
1uF
#C19
100nF
Extra Decoupling Capacitors
Power

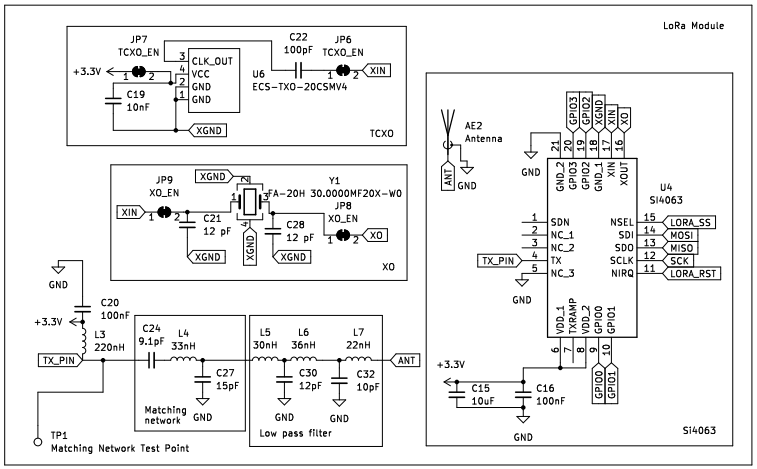
LoRa Module
JP7
TCXO_EN
C22
100pF
JP6
TCXO_EN
CLK_OUT
VCC
GND
U6
ECS-TXO-20CSMV4
XIN
C19
10nF
XGND
TCXO
JP9
XO_EN
Y1
FA-20H 30.0000MF20X-W0
JP8
XO_EN
C21
12 pF
C28
12 pF
XO
AE2
Antenna
ANT
U4
SI4063
SDN
NC_1
NC_2
TX
NC_3
NSEL
SDI
SDO
SCLK
NIRQ
LORA_SS
MOSI
MISO
SCK
LORA_RST
TX_PIN
C20
100nF
L3
220nH
C24
9.1pF
L4
33nH
C27
15pF
Matching network
L5
30nH
L6
36nH
L7
22nH
C30
12pF
C32
10pF
Low pass filter
ANT
TP1
Matching Network Test Point
C15
10uF
C16
100nF
SI4063