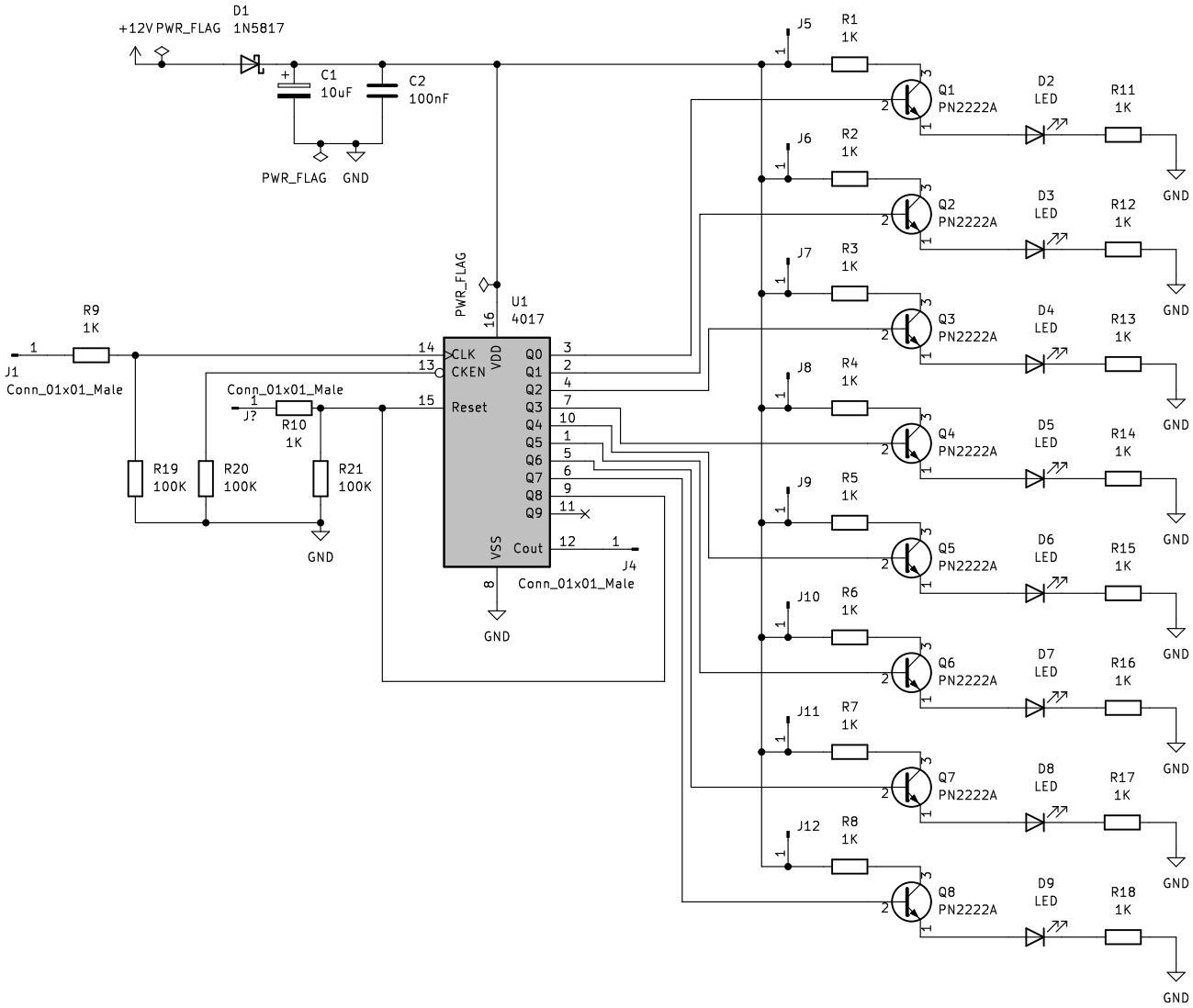

Aria Salvtrice

Sheet:
File: 4017.kicad_sch

Title: 4017 Counter

Size: A4	Date: 2022-09-09	**Rev: 1**
KiCad E.D.A. kicad (6.99.0-3702-g39089ad805)		Id: 1/1