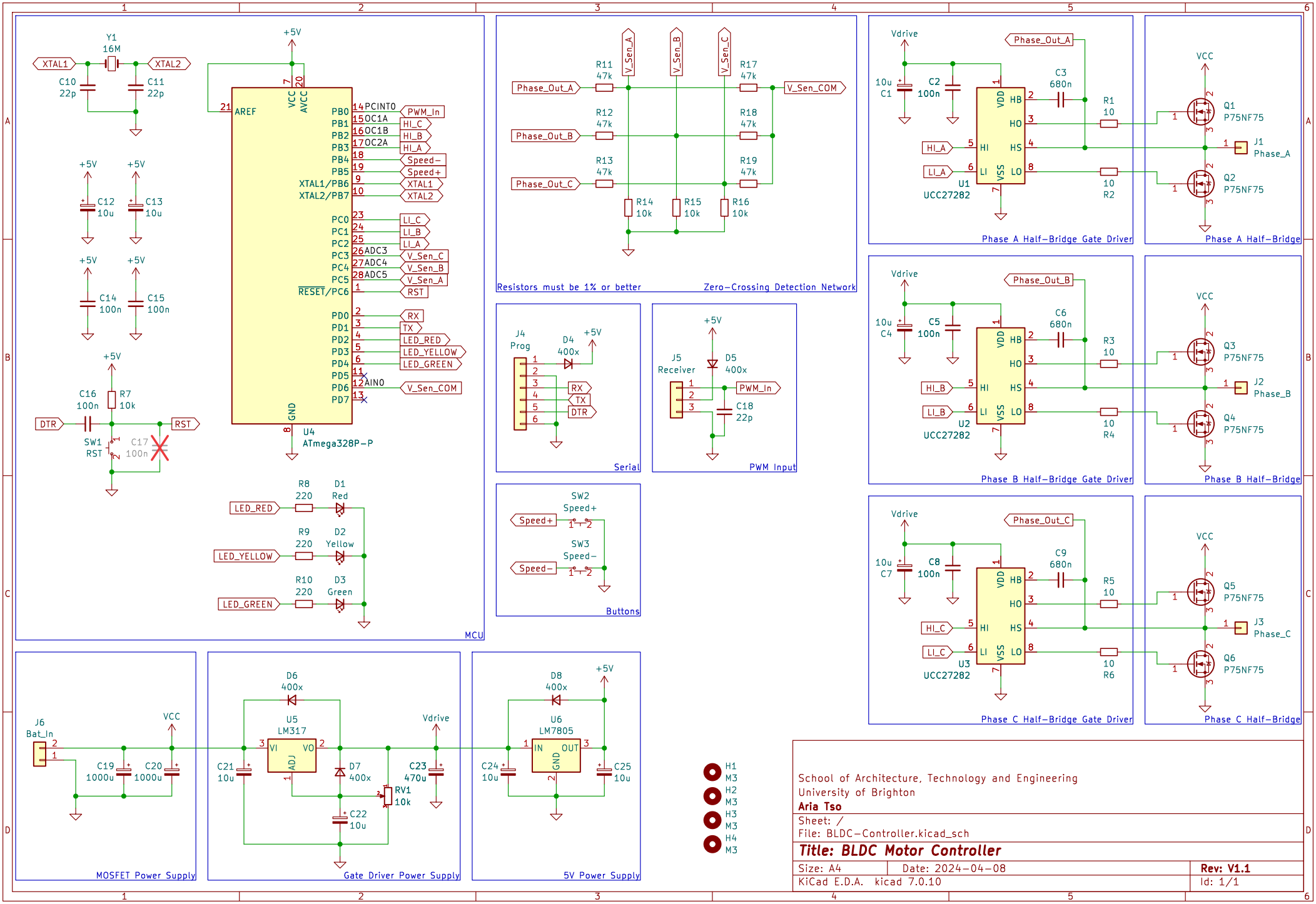

School of Architecture, Technology and Engineering
University of Brighton
Aria Tso

Sheet: /
File: BLDC-Controller.kicad_sch

Title: BLDC Motor Controller

Size: A4	Date: 2024-04-08	**Rev: V1.1**
KiCad E.D.A. kicad 7.0.10		Id: 1/1